0600-0699

WTC1-131-L88A

FABRICATION REQUIREMENTS		
	DESIGN	TOLERANCE
CAMBER AT MIDSPAN	0"	+ 3 / 8"
DESIGN DEPTH	24"	± 1 / 4"
PANEL "K"	3'-4"	± 1 / 4"
WEB DEPTH	23 7/8"	± 1 / 4"
OVERALL LENGTH	19'-11"	± 3 / 8"

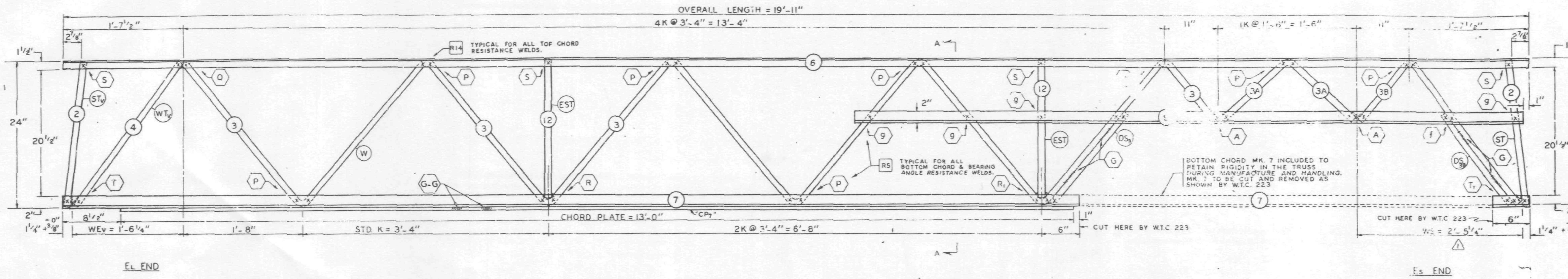

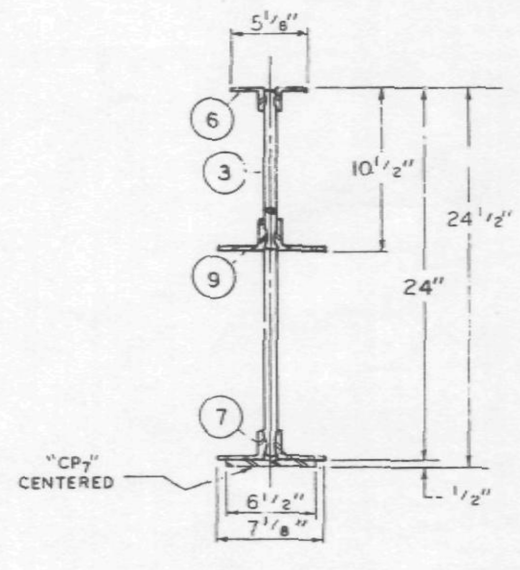

SECTION A-A

NO.	DATE	REVISION	BY
1	5-15-69	AS NOTED	G.D.C.

ALL PANEL POINTS RESISTANCE WELDED. (X).
ARC WELDS INDICATED AT SHADED AREAS AND AT BOTTOM CHORD WEB SPLICES. (IIIIIIII).
LETTERS IN HEXAGON INDICATE WELD DETAIL. ie., (A).
ALL WELD DETAILS SHOWN ON SHEET ST 290, ST 291 & ST 293.
LETTERS & NUMBERS IN SQUARES INDICATE RESISTANCE WELD STRENGTH IDENTIFIED IN THE QUALITY CONTROL PROGRAM. ie., [R5].
SEE SHEET ST 281 FOR CHORD PLATE DETAILS.

PAINT

LACLEDE ELECTROCOAT
RED NO. 10001

TRUSS DESIGNATION	TOP CHORD TWO ANGLES				BOTTOM CHORD TWO ANGLES				MAIN WEB "W"				
	MK.	TYPE STEEL	CHORD SIZE	LENGTH	MK.	TYPE STEEL	CHORD SIZE	LENGTH	MK.	TYPE STEEL	DIA.	LENGTH	NO. OF K
24T10H - 1911	6	A242	2"x1 1/2"x.31"	19'-11"	7	A36	3"x2"x.33"	19'-11"	3	A242	1.14	21'-8 3/8"	4 1/8K @ 3'-4" = 14'-3"
									3A	A242	1.14	2'-4 3/4"	1K @ 1'-6" = 1'-6"
									3B	A242	1.14	3'-8 1/4"	5/8K @ 3'-4" = 2'-6 1/2"

TRUSS DESIGNATION	TRUSS DATA		VERTICAL "EST" STRUT					CHORD PLATE				DOUBLE STRUT			
			MK.	TYPE STEEL	PCS.	DIA.	LENGTH	MK.	TYPE STEEL	SIZE	LENGTH	MK.	TYPE STEEL	DIA.	LENGTH
24T10H - 1911			12	A242	2	1.14	1'-10 7/8"	CP7	A36	6 1/2"x1/2"	13'-0"	DS3	A242	1.14	1'-6 3/4"

Es END	TRUSS DESIGNATION	INCLINED "ST" STRUT				WE	BEARING ANGLES				DOUBLE STRUT			
		MK.	TYPE STEEL	DIA.	LENGTH	l	MK.	TYPE STEEL	CHORD SIZE	LENGTH	MK.	TYPE STEEL	DIA.	LENGTH
	24T10H - 1911	2	A242	1.14	1'-11 3/4"	2'-5 1/4"	9	A36	3"x2"x.33"	9'-1 1/2"	DS3B	A242	1.14	1'-6 3/4"

EL END	TRUSS DESIGNATION	INCLINED "STv" STRUT				WEv	WEB "WTv"			
		MK.	TYPE STEEL	DIA.	LENGTH		MK.	TYPE STEEL	DIA.	LENGTH
	24T10H - 1911	2	A242	1.14	1'-11 3/4"	1'-6 1/4"	4	A242	1.14	2'-5 1/2"

REF. DRWGS.

7-AB2-18	10-4-68
7-AB3-30	10-4-68
7-AB3-31	10-4-68
7-AB3-24	8-15-68
7-AB4-17.7	10-4-68
7-AB4-17.1	10-4-68
SA-124	1-6-69
7-AB2-1	1-6-69

BRIDGING TRUSS DETAILS
FOR
WORLD TRADE CENTER - N.Y.C.
FOR
THE PORT OF NEW YORK AUTHORITY

BRIDGING TRUSS 24T10H x 19'-11" LONG
WORLD TRADE CENTER TOWERS A & B

FABRICATED BY LACLEDE STEEL COMPANY
FABRICATED AT MADISON, ILLINOIS
APPROVED FOR FABRICATION FOR PONYA — DATE 6/4/69
APPROVED FOR FABRICATION FOR FABRICATOR — DATE
LACLEDE STEEL CO.
DETAILED BY A CARL WEBER

DESIGN DRAWING NO. 7-AB2-18
DRAWN BY: gdc
DATE APRIL 14, 1969
CHECKED BY: T.M.CHURA
DATE APRIL 14, 1969
FABRICATION CONT. NO. W.T.C. 221
PLATE
IN CHARGE OF PROD. DEV.
SHEET NO. ST 210H

FABRICATION REQUIREMENTS		
	DESIGN	TOLERANCE
CAMBER AT MIDSPAN	0"	+ 3 / 8"
DESIGN DEPTH	24"	± 1 / 4"
PANEL "K"	3'-4"	± 1 / 4"
WEB DEPTH	23 7/8"	± 1 / 4"
OVERALL LENGTH	19'-11"	± 3 / 8"

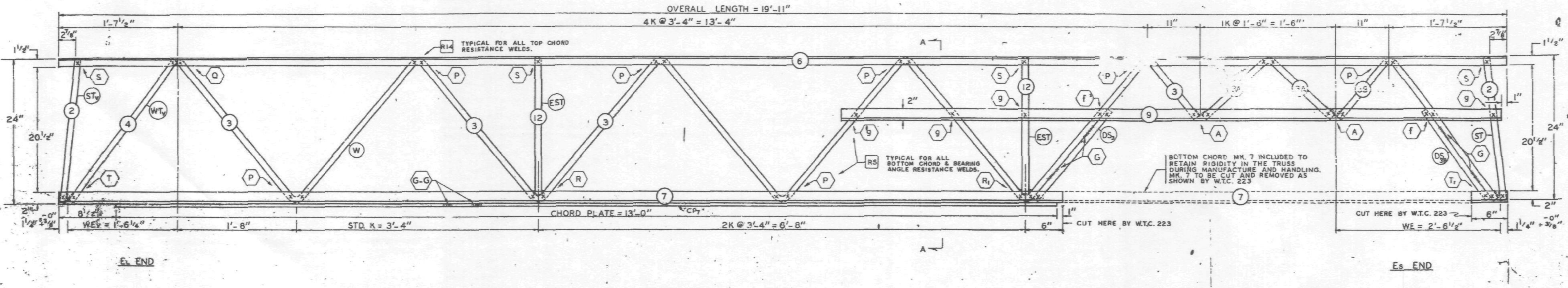

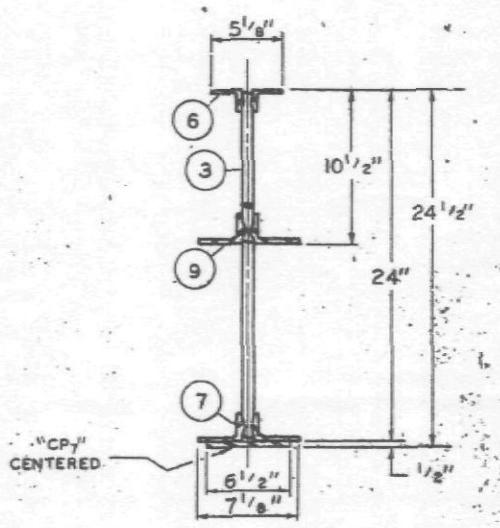

SECTION A-A

NO.	DATE	REVISION	BY

ALL PANEL POINTS RESISTANCE WELDED. (X).
ARC WELDS INDICATED AT SHADED AREAS
AND AT BOTTOM CHORD WEB SPLICES. (IIIIIII).
LETTERS IN HEXAGON INDICATE WELD DETAIL. ie., (A).
ALL WELD DETAILS SHOWN ON SHEET ST 290, ST 291 & ST 293.
LETTERS & NUMBERS IN SQUARES INDICATE RESISTANCE WELD STRENGTH IDENTIFIED IN THE QUALITY CONTROL PROGRAM. ie., [R5].
SEE SHEET ST 281 FOR CHORD PLATE DETAILS.

PAINT

LACLEDE ELECTROCOAT
RED NO. 10001

VOID

TRUSS DESIGNATION	TOP CHORD TWO ANGLES				BOTTOM CHORD TWO ANGLES				MAIN WEB "W"					TRUSS DATA		VERTICAL "EST" STRUT					CHORD PLATE				DOUBLE STRUT			
	MK.	TYPE STEEL	CHORD SIZE	LENGTH	MK.	TYPE STEEL	CHORD SIZE	LENGTH	MK.	TYPE STEEL	DIA.	LENGTH	NO. OF K			MK.	TYPE STEEL	PCS.	DIA.	LENGTH	MK.	TYPE STEEL	SIZE	LENGTH	MK.	TYPE STEEL	DIA.	LENGTH
24T10H - 1911	6	A242	2"x1 1/2"x.31"	19'-11"	7	A36	3"x2"x.33"	19'-11"	3 3A 3B	A242 A242 A242	1.14 1.14 1.14	[illegible]	[illegible]			12	A242	2	1.14	1'-10 7/8"	CP7	A36	6 1/2"x1/2"	13'-0"	DS3	A242	1.14	1'-6 3/4"

Es END	TRUSS DESIGNATION	INCLINED "ST" STRUT				WE	BEARING ANGLES				DOUBLE STRUT			
		MK.	TYPE STEEL	DIA.	LENGTH		MK.	TYPE STEEL	CHORD SIZE	LENGTH	MK.	TYPE STEEL	DIA.	LENGTH
	24T10H - 1911	2	A242	1.14	1'-11 3/4"	2'-6 1/2"	9	A36	3"x2"x.33"	9'-1 1/2"	DS3B	A242	1.14	1'-8 3/4"

EL END	TRUSS DESIGNATION	INCLINED "STv" STRUT				WEv	WEB "WTv"			
		MK.	TYPE STEEL	DIA.	LENGTH		MK.	TYPE STEEL	DIA.	LENGTH
	24T10H - 1911	2	A242	1.14	1'-11 3/4"	1'-8 1/4"	4	A242	1.14	2'-5 1/2"

REF. DRWGS.

7-A82-18	10-4-68
7-A83-30	10-4-68
7-A83-31	10-4-68
7-A83-24	8-15-68
7-A84-17.2	10-4-68
7-A84-17.1	10-4-68
8A-124	1-6-69
7-A82-1	1-6-69

BRIDGING TRUSS DETAILS
FOR
WORLD TRADE CENTER - N.Y.C.
FOR
THE PORT OF NEW YORK AUTHORITY

BRIDGING TRUSS 24T10H 19'-11" LONG
WORLD TRADE CENTER TOWERS A & B

FABRICATION BY: LACLEDE STEEL COMPANY
FABRICATED AT MADISON, ILLINOIS
DESIGN DRAWING NO. 7-A82-18
APPROVED FOR FABRICATION BY ______ FOR P.O.N.Y.A. DATE ______
DRAWN BY: [illegible] DATE APRIL 14, 1969
APPROVED FOR FABRICATION BY ______ FOR FABRICATOR DATE ______
CHECKED BY: T.M.CHURA DATE APRIL 14, 1969
IN CHARGE [illegible]
FABRICATION CONT. NO. W.T.C. 221
SHEET ST [illegible]

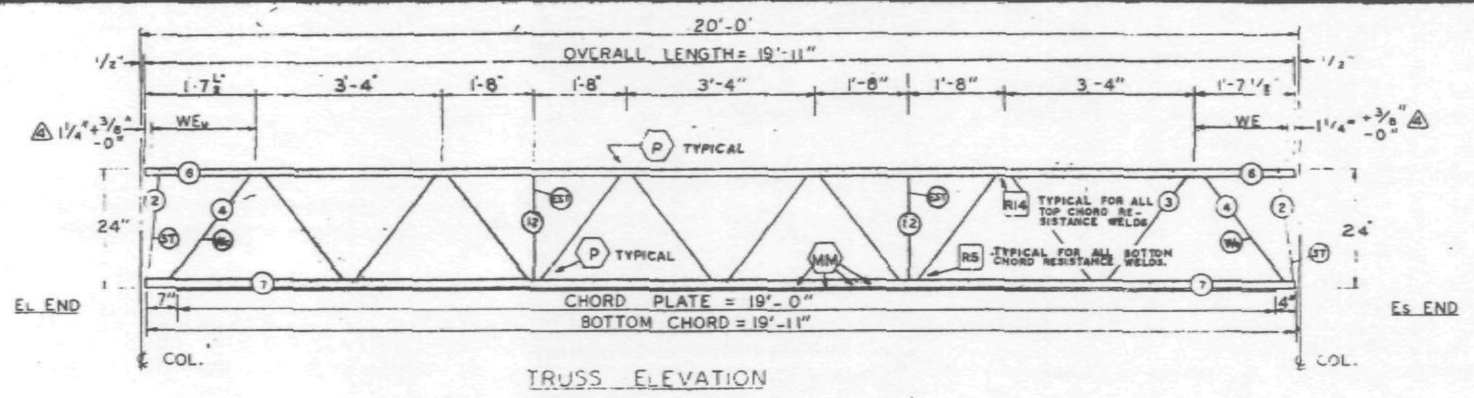

TRUSS ELEVATION

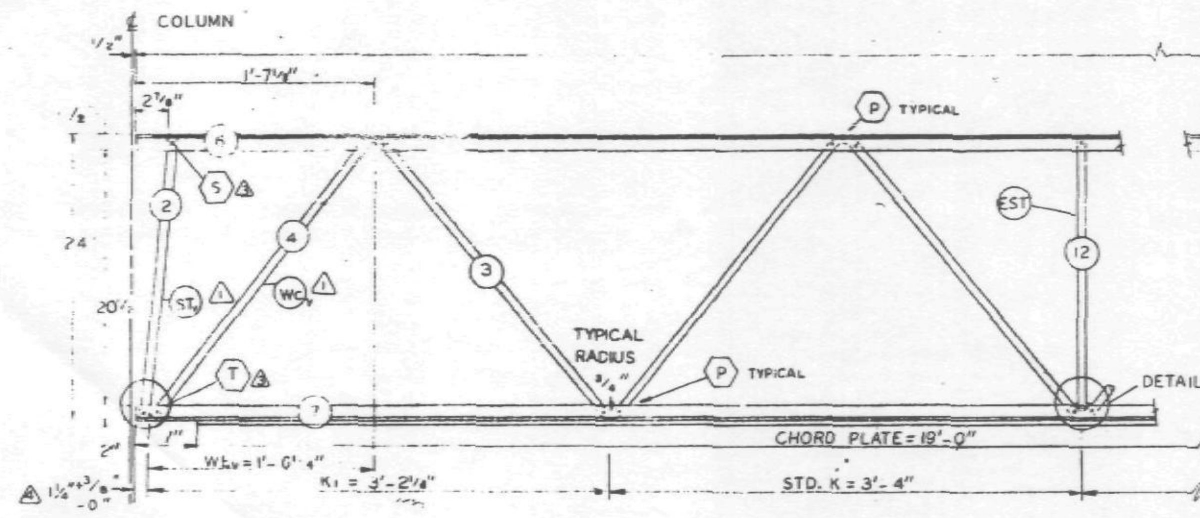

ELEVATION AT EL END

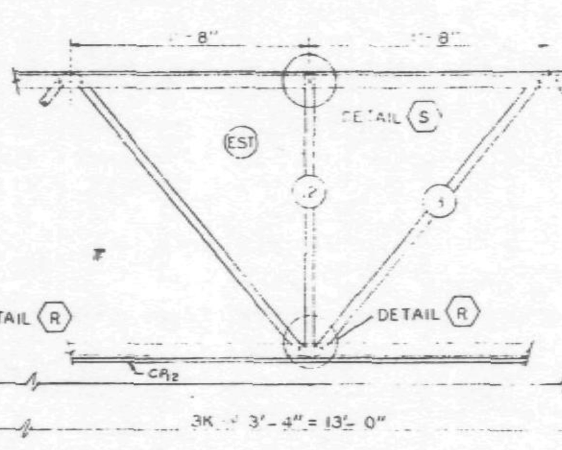

ELEVATION AT ADDED STRUT

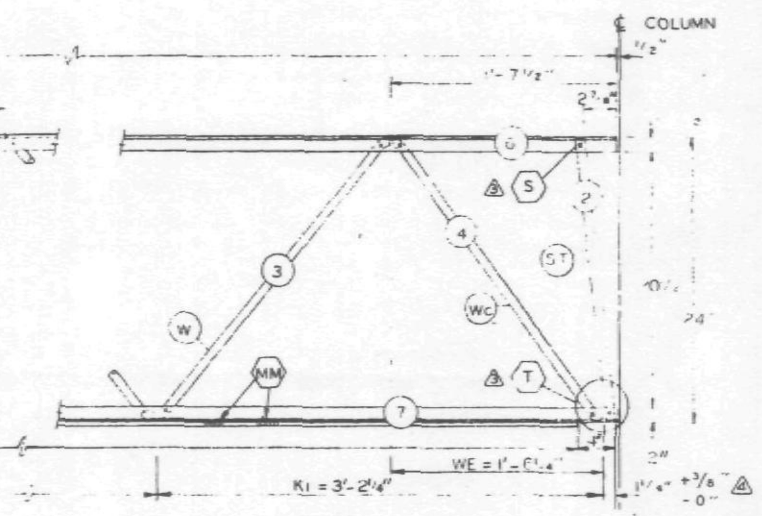

ELEVATION AT Es END

FABRICATION REQUIRMENTS	DESIGN	TOLERANCE
CAMBER AT MIDSPAN	0"	[illegible]
DESIGN DEPTH	24"	± 1/4"
PANEL "K"	3'-4	± 1/8"
PANEL "K1"	3'-2 1/4"	± 1/4"
WEB DEPTH	23 1/2"	± 1/4"
OVERALL LENGTH	19'-11"	+ 3/8"

ALL PANEL POINTS RESISTANCE WELDED (A)
ARC WELDS INDICATED AT SHADED AREAS
AND AT BOTTOM CHORD WEB SPLICES
ALL WELD DETAILS SHOWN ON SHEETS ST290, ST282 △1
AND ST291
LETTERS IN HEXAGON INDICATE WELD DETAIL, ie., (A).
LETTERS AND NUMBERS IN SQUARES INDICATE RESISTANCE WELD STRENGTH IDENTIFIED IN THE QUALITY CONTROL PROGRAM, ie., [R5].
CHORD PLATE DETAILS SHOWN ON SHEET ST282 △1

REF. DWG. 7-AB2-1 4-1-68
7-AB2-5 4-15-68
7-AB4-15 1-3-68
7-AB4-19, 28 & 41 1-3-68
7-AB4-38 4-1-68
7-AB4-16 & 18 5-6-68 △1

PAINT
LACLEDE ELECTROCOAT
RED NO 10001

TRUSS DESIGNATION	TOP CHORD TWO ANGLES				BOTTOM CHORD TWO ANGLES				MAIN WEB "W"					VERTICAL "EST" STRUT					TRUSS DATA		FILLER		CHORD PLATE			
	MK	TYPE STEEL	CHORD SIZE	LENGTH	MK	TYPE STEEL	CHORD SIZE	LENGTH	MK	TYPE STEEL	DIA	LENGTH	NO OF K	MK	TYPE STEEL	DIA	LENGTH	NUMBER REQUIRED			NO.	DIA.	MK	TYPE STEEL	SIZE	LENGTH
24T10 -1911	6	A242	2"x 1 1/2"x .31"	19'-11"	7	A36	3"x 2"x .33"	19'-11"	3	A242	1.14	25'-7 1/2" △2	5K @ 3'-4" = 16'-8"	12	A242	1.14	1'-10 7/8"	2			—	—	CR2	A36	6 1/2"x 1/2"	19'-0"

Es END	TRUSS DESIGNATION	WE	INCLINED "ST" STRUT				WEB "Wc"				
			MK	TYPE STEEL	DIA	LENGTH	MK	TYPE STEEL	PCS	DIA	LENGTH
	24T10 -1911	1'-6 1/4"	2	A242	1.14	1'-11 3/4"	4	A242	1	1.14	2'-5 1/2"

EL END	TRUSS DESIGNATION	BEARING ANGLES				WE1	DIAGONAL "T" STRUT				△1 INCLINED "ST1" STRUT				END STIFFENER MK VS			END STIFFENER MK V6			WEB "Wc" △1				
		MK	TYPE STEEL	CHORD SIZE	LENGTH		MK	TYPE STEEL	DIA	LENGTH	MK	TYPE STEEL	DIA	LENGTH	TYPE STEEL	DIA	LENGTH	TYPE STEEL	DIA	LENGTH	MK	TYPE STEEL	PCS	DIA	LENGTH
	24T10 -1911	—	—	—	—	1'-6 3/4"	—	—	—	—	2	A242	1.14	1'-11 1/2"	—	—	—	—	—	—	4	A242	1	1.14	2'-5 1/2"

NO.	DATE	REVISION	BY
△4	9-5-68	END DIST. ②	T.M.C.
△3	7-8-68	AS NOTED	T.M.C.
△2	7-3-68	MAIN WEB	T.M.C.
△1	6-28-68	AS NOTED	T.M.C.

BRIDGING TRUSS DETAILS
FOR
WORLD TRADE CENTER - N.Y.C.
FOR
THE PORT OF NEW YORK AUTHORITY

BRIDGING TRUSS 24T10 x 19'-11" LONG
WORLD TRADE CENTER TOWERS A-B

FABRICATION BY LACLEDE STEEL COMPANY

FABRICATED AT MADISON, ILLINOIS		DESIGN DRAWING NO. 7-AB2-6	PLATE
APPROVED FOR FABRICATION BY [illegible] FOR PONYA	DATE 9/10/68	DRAWN BY [illegible] DATE MAY 24, 1968	
APPROVED FOR FABRICATION BY ____ FOR FABRICATOR	DATE	CHECKED BY T.M. CHURA DATE MAY 24, 1968	IN CHARGE OF PROD. DEV.
DETAILED BY A.C. WEBER	LACLEDE STEEL CO.	FABRICATION CONT. NO W.T.C. 221	SHEET NO ST210

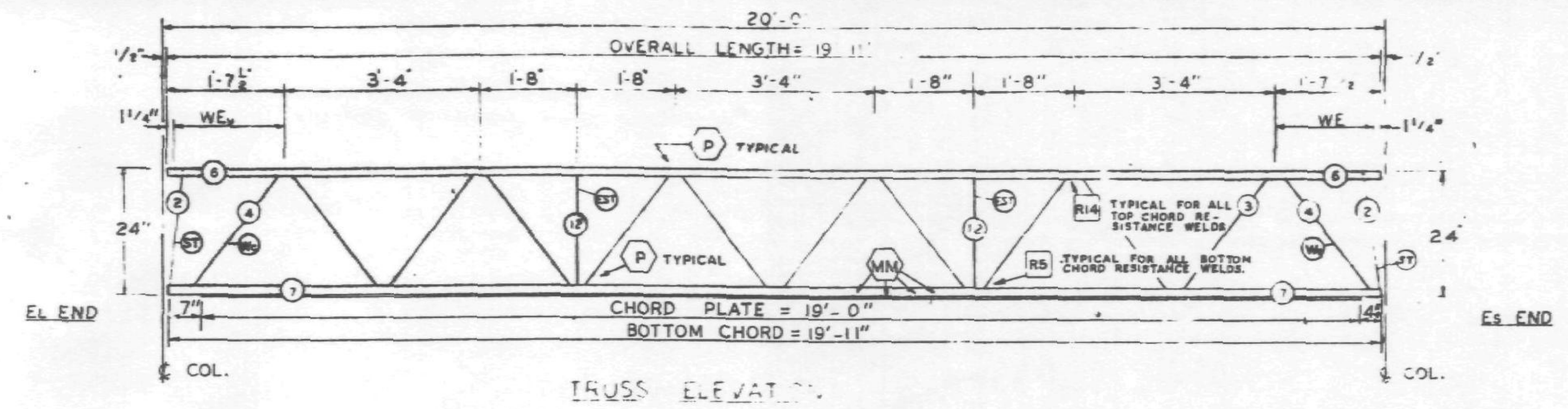

TRUSS ELEVATION

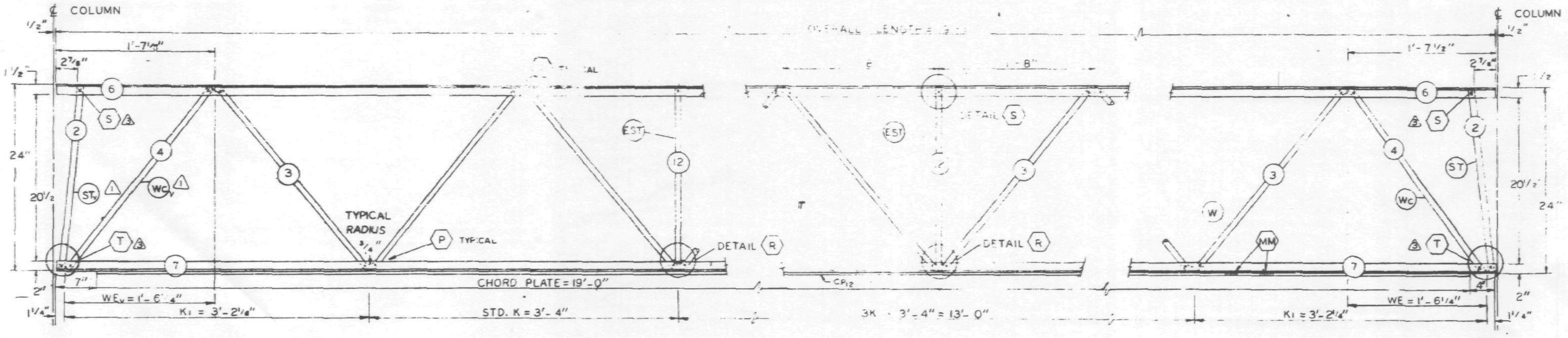

ELEVATION AT EL END

ELEVATION AT ADDED STRUT

ELEVATION AT Es END

FABRICATION REQUIRMENTS	DESIGN	TOLERANCE
CAMBER AT MIDSPAN	0"	± 1/8"
DESIGN DEPTH,	24"	± 1/4"
PANEL "K"	3'-4"	± 1/4"
PANEL "K1"	3'-2 1/4"	± 1/4"
WEB DEPTH	23 1/2"	± 1/4"
OVERALL LENGTH	19'-11"	± 1/8"

ALL PANEL POINTS RESISTANCE WELDED (✕) ARC WELDS INDICATED AT SHADED AREAS AND AT BOTTOM CHORD WEB SPLICES (▬)

ALL WELD DETAILS SHOWN ON SHEETS ST290, ST282 △1 AND ST291.

LETTERS IN HEXAGON INDICATE WELD DETAIL, ie. ⟨A⟩. LETTERS AND NUMBERS IN SQUARES INDICATE RESISTANCE WELD STRENGTH IDENTIFIED IN THE QUALITY CONTROL PROGRAM, ie., [R5].

CHORD PLATE DETAILS SHOWN ON SHEET ST282 △1

REF. DWG.

7-AB2-1	4-1-68
7-AB2-5	4-15-68
7-AB4-15.1	1-3-68
7-AB4-15, 28 & 41	1-3-68
7-AB4-38	4-1-68
7-AB4-16 & 18	5-6-68 △1

PAINT
LACLEDE ELECTROCOAT
RED NO. 000

TRUSS DESIGNATION	TOP CHORD TWO ANGLES				BOTTOM CHORD TWO ANGLES				MAIN WEB "W"					VERTICAL "EST" STRUT					TRUSS DATA		FILLER		CHORD PLATE			
	MK.	TYPE STEEL	CHORD SIZE	LENGTH	MK.	TYPE STEEL	CHORD SIZE	LENGTH	MK	TYPE STEEL	DIA	LENGTH	NO. OF K	MK	TYPE STEEL	DIA	LENGTH	NUMBER REQUIRED			NO.	DIA.	MK.	TYPE STEEL	SIZE	LENGTH
24T10 -1911	6	A242	2"x 1 1/2" x .31"	19'-11"	7	A36	3" x 2" x .33"	19'-11"	3	A242	1.14	25'-7 1/2"	5K @ 3'-4" = 16'-8"	12	A242	1.14	1'-10 7/8"	2			—	—	CP_{12}	A36	6 1/2" x 1/2"	19'-0"

△2

Es END	TRUSS DESIGNATION	WE	INCLINED "ST" STRUT				WEB "Wc"				
			MK.	TYPE STEEL	DIA	LENGTH	MK	TYPE STEEL	PCS	DIA	LENGTH
	24T10 -1911	1'-6 1/4"	2	A242	1.14	1'-11 3/4"	4	A242	1	1.14	2'-5 1/2"

EL END	TRUSS DESIGNATION	BEARING ANGLES				WE_v	DIAGONAL "T" STRUT				INCLINED "ST" STRUT △1				END STIFFENER MK V5			END STIFFENER MK V6			WEB "Wc_v" △1				
		MK.	TYPE STEEL	CHORD SIZE	LENGTH		MK.	TYPE STEEL	DIA	LENGTH	MK.	TYPE STEEL	DIA	LENGTH	TYPE STEEL	DIA	LENGTH	TYPE STEEL	DIA	LENGTH	MK	TYPE STEEL	PCS	DIA	LENGTH
	24T10 -1911	—	—	—	—	1'-6 1/4"	—	—	—	—	2	A242	1.14	1'-11 3/4"	—	—	—	—	—	—	4	A242	1	1.14	2'-5 1/2"

NO.	DATE	REVISION	BY
△3	7-8-68	AS NOTED	T.M.C.
△2	7-3-68	MAIN WEB	T.M.C.
△1	6-26-68	AS NOTED	T.M.C.

BRIDGING TRUSS DETAILS
FOR
WORLD TRADE CENTER - N.Y.C.
FOR
THE PORT OF NEW YORK AUTHORITY

BRIDGING TRUSS 24T10 x 19'-11" LONG

WORLD TRADE CENTER TOWERS - A-B

FABRICATION BY LACLEDE STEEL COMPANY

FABRICATED AT MADISON, ILLINOIS

DESIGN DRAWING NO. 7-AB2-5 PLATE

APPROVED FOR FABRICATION FOR P.O.N.Y.A. BY JW DATE 7/9/68

DRAWN BY [illegible] DATE MAY 24, 1968

APPROVED FOR FABRICATION FOR FABRICATOR BY ___ DATE ___

CHECKED BY T.M.CHURA DATE MAY 24, 1968

IN CHARGE PROD. DEV.

DETAILED BY [illegible]

FABRICATION CONT. NO. W.T.C. 221

SHEET NO. BT210

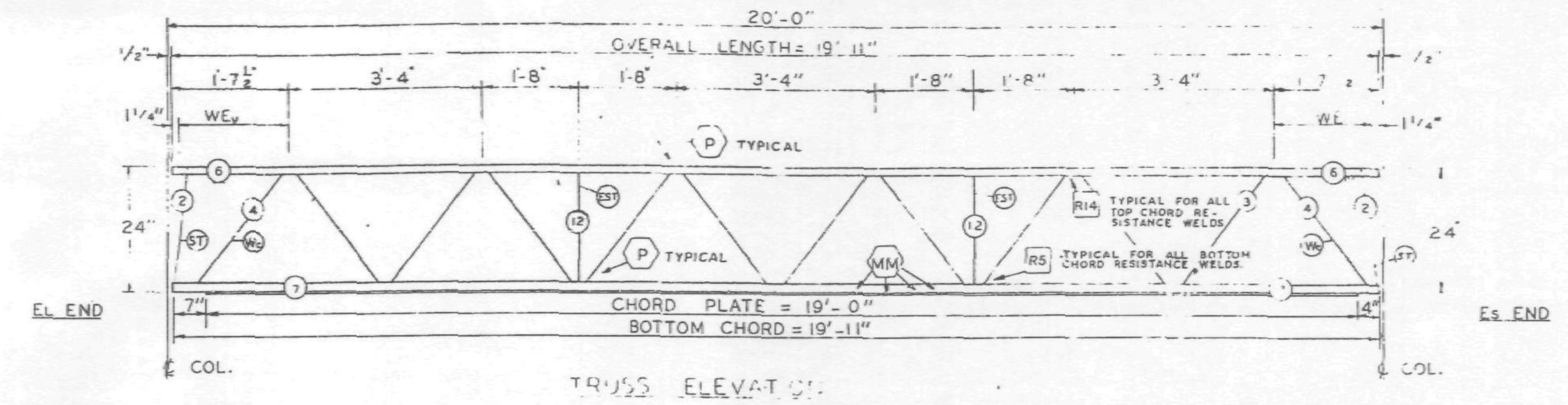

TRUSS ELEVATION

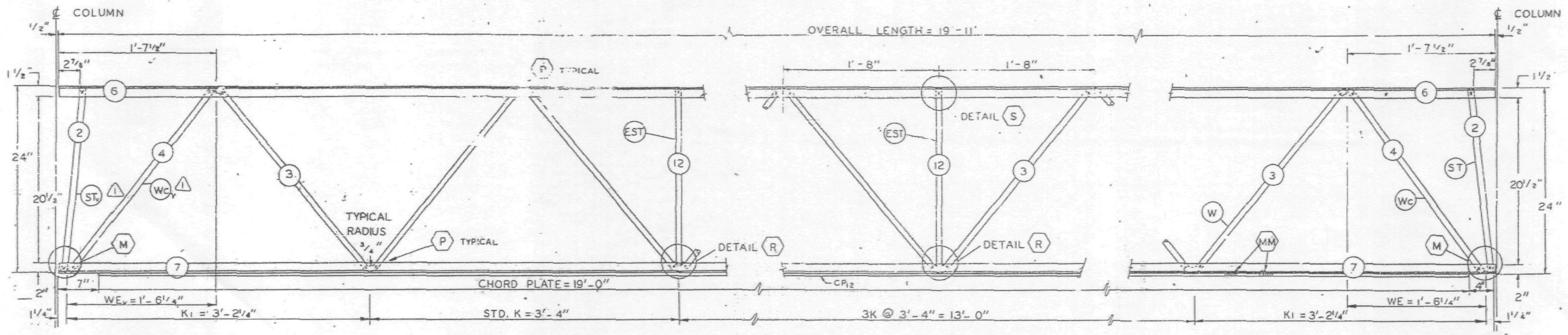

ELEVATION AT EL END

ELEVATION AT ADDED STRUT

ELEVATION AT ES END

FABRICATION REQUIRMENTS	DESIGN	TOLERANCE
CAMBER AT MIDSPAN	0"	± 3/8"
DESIGN DEPTH	24"	± 1/4"
PANEL "K"	3'-4"	± 1/4"
PANEL "K1"	3'-2¼"	± 1/4"
WEB DEPTH	23⅞"	± 1/4"
OVERALL LENGTH	19'-11"	± 3/8"

ALL PANEL POINTS RESISTANCE WELDED (X).
ARC WELDS INDICATED AT SHADED AREAS
AND AT BOTTOM CHORD WEB SPLICES (IF ANY)
ALL WELD DETAILS SHOWN ON SHEETS ST290, ST282 ⚠1
AND ST291.
LETTERS IN HEXAGON INDICATE WELD DETAIL, i.e., (A).
LETTERS AND NUMBERS IN SQUARES INDICATE RESISTANCE WELD STRENGTH IDENTIFIED IN THE QUALITY CONTROL PROGRAM, i.e., [R5].
CHORD PLATE DETAILS SHOWN ON SHEET ST282 ⚠1

REF. DWG.

7-AB2-1	4-1-68
7-AB2-5	4-15-68
7-AB4-15.11	1-3-68
7-AB4-19, 28 & 41	1-3-68
7-AB4-38	4-1-68
7-AB4-16 & 18	5-6-68 ⚠1

PAINT
LACLEDE ELECTROCOAT
RED NO 10001

TRUSS DESIGNATION	TOP CHORD TWO ANGLES				BOTTOM CHORD TWO ANGLES				MAIN WEB "W"					VERTICAL "EST" STRUT					TRUSS DATA		FILLER		CHORD PLATE			
	MK	TYPE STEEL	CHORD SIZE	LENGTH	MK	TYPE STEEL	CHORD SIZE	LENGTH	MK	TYPE STEEL	DIA	LENGTH	NO OF K	MK	TYPE STEEL	DIA	LENGTH	NUMBER REQUIRED			NO.	DIA.	MK.	TYPE STEEL	SIZE	LENGTH
24T10 -1911	6	A242	2" x 1½" x .31"	19'-11"	7	A36	3" x 2" x .33"	19'-11"	3	A242	1.14	30'-6½"	5K @ 3'-4" = 16'-8"	12	A242	1.14	1'-10⅞"	2			—	—	CP12	A36	6½" x ½"	19'-0"

ES END	TRUSS DESIGNATION	WE	INCLINED "ST" STRUT				WEB "WC"				
			MK	TYPE STEEL	DIA	LENGTH	MK	TYPE STEEL	PCS	DIA	LENGTH
	24T10 -1911	1'-6¼"	2	A242	1.14	1'-11¾"	4	A242	1	1.14	2'-5½"

EL END	TRUSS DESIGNATION	BEARING ANGLES				WE_v	DIAGONAL "T" STRUT				⚠1 INCLINED "ST_v" STRUT				END STIFFENER MK V5			END STIFFENER MK V6			WEB "WC_v" ⚠1				
		MK	TYPE STEEL	CHORD SIZE	LENGTH		MK.	TYPE STEEL	DIA	LENGTH	MK	TYPE STEEL	DIA	LENGTH	TYPE STEEL	DIA	LENGTH	TYPE STEEL	DIA	LENGTH	MK	TYPE STEEL	PCS	DIA	LENGTH
	24T10 -1911	—	—	—	—	1'-6¼"	—	—	—	—	2	A242	1.14	1'-11¾"	—	—	—	—	—	—	4	A242	1	1.14	2'-5½"

NO.	DATE	REVISION	BY
⚠1	6-26-68	AS NOTED	T.M.C.

BRIDGING TRUSS DETAILS
FOR
WORLD TRADE CENTER - N.Y.C.
FOR
THE PORT OF NEW YORK AUTHORITY

BRIDGING TRUSS 24T10 x 19'-11" LONG
WORLD TRADE CENTER TOWERS - A-B

FABRICATION BY LACLEDE STEEL COMPANY

FABRICATED AT MADISON, ILLINOIS		DESIGN DRAWING NO 7-AB2-5	PLATE
APPROVED FOR FABRICATION BY JW FOR P.O.N.Y.A.	DATE 7/5/68	DRAWN BY [illegible] DATE MAY 24, 1968	
APPROVED FOR FABRICATION BY ____ FOR FABRICATOR	DATE	CHECKED BY T.M. CHURA DATE MAY 24, 1968	IN CHARGE OF PROD. DEV.
DETAILED BY A. C. WEBER		FABRICATION CONT. NO WTC 221	SHEET NO BT210

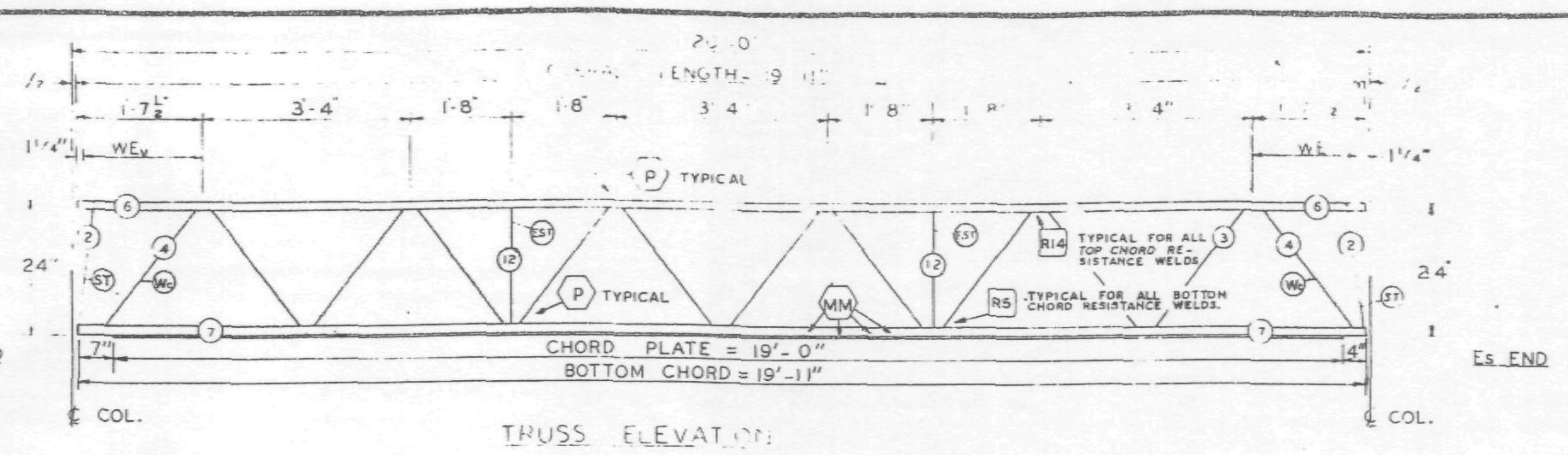

TRUSS ELEVATION

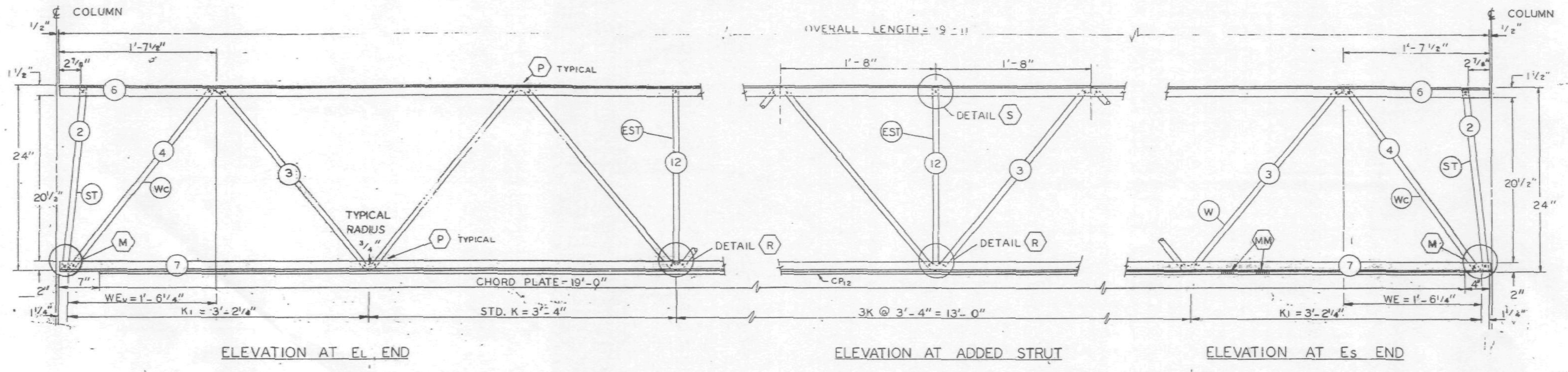

ELEVATION AT EL END

ELEVATION AT ADDED STRUT

ELEVATION AT ES END

ALL PANEL POINTS RESISTANCE WELDED (x)
ARC WELDS INDICATED AT SHADED AREAS
AND AT BOTTOM CHORD WEB SPLICES (HRM)
ALL WELD DETAILS SHOWN ON SHEETS ST290, ST281, AND ST291.
LETTERS IN HEXAGON INDICATE WELD DETAIL, ie., (A)
LETTERS AND NUMBERS IN SQUARES INDICATE RESISTANCE WELD STRENGTH IDENTIFIED IN THE QUALITY CONTROL PROGRAM, ie., [R5].
CHORD PLATE DETAILS SHOWN ON SHEET ST281.

[illegible] ATION REQ[illegible]	DESIGN	[illegible]
CAMBER AT MIDSPAN	[illegible]	[illegible]
DESIGN DEPTH	24"	[illegible]
PANEL "K"	3'-4"	[illegible]
PANEL "K1"	3'-2¼"	[illegible]
WEB DEPTH	[illegible]	[illegible]
OVERALL LENGTH	19'-11"	[illegible]

TISHMAN

REF. DWG. 7-AB2-1 4-1-68
7-AB2-5 4-15-68
7-AB4-15.1 1-3-68
7-AB4-19,28 & 41 1-3-68
7-AB4-38 4-1-68
7-AB4-16 & 18 5-17-68

PAINT
LACLEDE ELECTROCOAT
RED NO 10001

TRUSS DESIGNATION	TOP CHORD TWO ANGLES				BOTTOM CHORD TWO ANGLES				MAIN WEB "W"					VERTICAL "EST" STRUT					TRUSS DATA		FILLER		CHORD PLATE			
	MK	TYPE STEEL	CHORD SIZE	LENGTH	MK	TYPE STEEL	CHORD SIZE	LENGTH	MK	TYPE STEEL	DIA	LENGTH	NO OF K	MK	TYPE STEEL	DIA	LENGTH	NUMBER REQUIRED			NO.	DIA.	MK.	TYPE STEEL	SIZE	LENGTH
24T10 -1911	6	A242	2"x 1½"x .31"	19'-11"	7	A36	3"x 2"x .33"	19'-11"	3	A242	1.14	30'-6½"	5K @ 3'-4" = 16'-8"	12	A242	1.14	1'-10⅞"	2			—	—	CP12	A36	6½"x ½"	19'-0"

ES END	TRUSS DESIGNATION	WE	INCLINED "ST" STRUT				WEB "WC"				
			MK	TYPE STEEL	DIA	LENGTH	MK	TYPE STEEL	PCS	DIA	LENGTH
	24T10 -1911	1'-6¼"	2	A242	1.14	1'-11¾"	4	A242	1	1.14	2'-5½"

EL END	TRUSS DESIGNATION	BEARING ANGLES				WEV	DIAGONAL "T" STRUT				INCLINED "ST" STRUT				END STIFFENER MK V5			END STIFFENER MK V6			WEB "WC"				
		MK	TYPE STEEL	CHORD SIZE	LENGTH		MK	TYPE STEEL	DIA	LENGTH	MK	TYPE STEEL	DIA	LENGTH	TYPE STEEL	DIA	LENGTH	TYPE STEEL	DIA	LENGTH	MK	TYPE STEEL	PCS	DIA	LENGTH
	24T10 -1911	—	—	—	—	1'-6¼"	—	—	—	—	2	A242	1.14	1'-11¾"	—	—	—	—	—	—	4	A242	1	1.14	2'-5½"

NO.	DATE	REVISION	BY

BRIDGING TRUSS DETAILS
FOR
WORLD TRADE CENTER – N.Y.C.
FOR
THE PORT OF NEW YORK AUTHORITY

BRIDGING TRUSS 24T10 x 19'-11" LONG
WORLD TRADE CENTER TOWERS - A-B

FABRICATION BY LACLEDE STEEL COMPANY

FABRICATED AT MADISON, ILLINOIS	DESIGN DRAWING NO. 7-AB2-5 PLATE
APPROVED FOR FABRICATION BY [signature] FOR P.O.N.Y.A DATE 6/6/68	DRAWN BY: [signature] DATE MAY 24, 1968
APPROVED FOR FABRICATION BY LACLEDE STEEL CO. FOR FABRICATOR DATE	CHECKED BY T.M. CHURA DATE MAY 24, 1968 — IN CHARGE PROD. DEP.
DETAILED BY A C WEBER	FABRICATION CONT NO. W.T.C. 221 — SHEET BT210

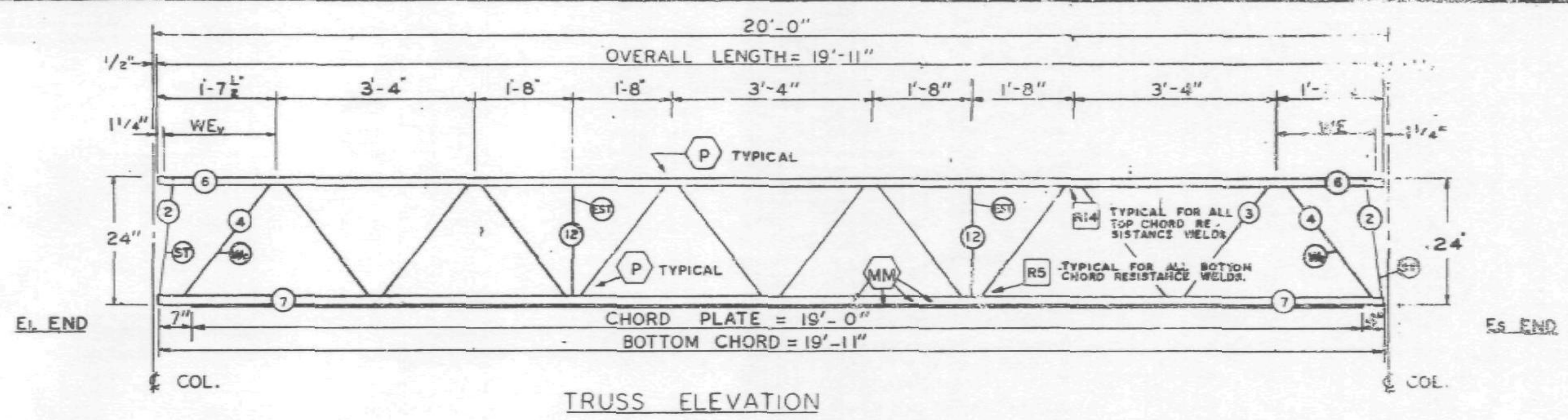

TRUSS ELEVATION

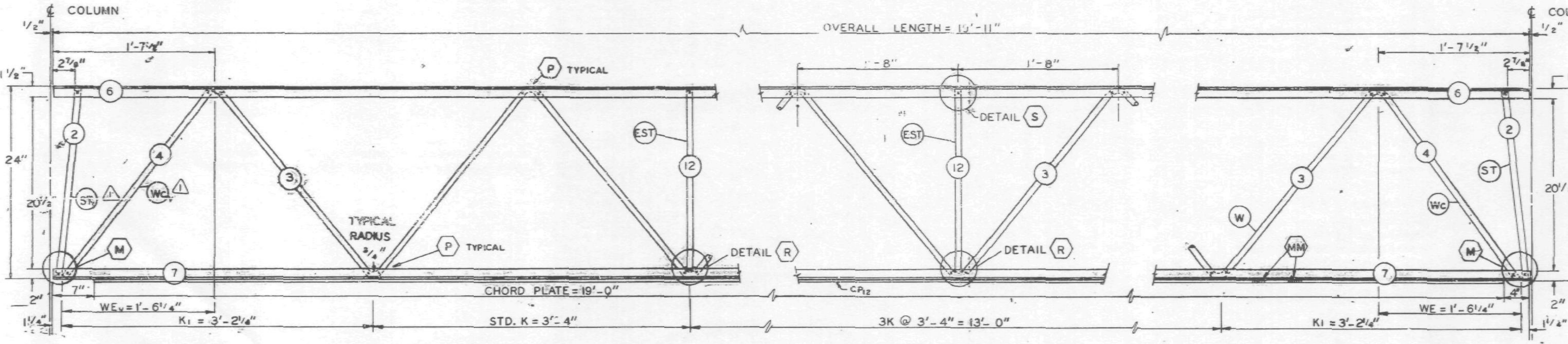

ELEVATION AT EL END

ELEVATION AT ADDED STRUT

ELEVATION AT Es END

FABRICATION REQUIRMENTS	DESIGN	TOLERANCE
CAMBER AT MIDSPAN	0"	± 1/8"
DESIGN DEPTH	24"	± 1/4"
PANEL "K"	3'-4"	± 1/4"
PANEL "K1"	3'-2 1/4"	± 1/4"
WEB DEPTH	23 1/8"	± 1/4"
OVERALL LENGTH	19'-11"	± 3/8"

ALL PANEL POINTS RESISTANCE WELDED (X).
ARC WELDS INDICATED AT SHADED AREAS AND AT BOTTOM CHORD WEB SPLICES
ALL WELD DETAILS SHOWN ON SHEETS ST290, ST282 (1) AND ST291.
LETTERS IN HEXAGON INDICATE WELD DETAIL, ie., (A).
LETTERS AND NUMBERS IN SQUARES INDICATE RESISTANCE WELD STRENGTH IDENTIFIED IN THE QUALITY CONTROL PROGRAM; ie., [R5].
CHORD PLATE DETAILS SHOWN ON SHEET ST282 (1)

REF. DWG.	
7-AB2-1	4-1-68
7-AB2-5	4-15-68
7-AB4-15.1	1-3-68
7-AB4-19, 28 & 41	1-3-68
7-AB4-38	4-1-68
7-AB4-16 & 18	5-6-68 (1)

PAINT
LACLEDE ELECTROCOAT
RED NO 10001

TRUSS DESIGNATION	TOP CHORD TWO ANGLES				BOTTOM CHORD TWO ANGLES				MAIN WEB "W"					VERTICAL "EST" STRUT					TRUSS DATA		FILLER		CHORD PLATE			
	MK.	TYPE STEEL	CHORD SIZE	LENGTH	MK.	TYPE STEEL	CHORD SIZE	LENGTH	MK.	TYPE STEEL	DIA.	LENGTH	NO. OF K.	MK.	TYPE STEEL	DIA.	LENGTH	NUMBER REQUIRED			NO.	DIA.	MK.	TYPE STEEL	SIZE	LENGTH
24T10 -1911	6	A242	2"x 1 1/2" x .31"	19'-11"	7	A36	3" x 2" x .33"	19'-11"	3	A242	1.14	25'-7 1/2"	5K @ 3'-4" = 16'-8" (2)	12	A242	1.14	1'-10 7/8"	2			—	—	CP2	A36	6 1/2" x 1/2"	19'-0"

Es END	TRUSS DESIGNATION	WE	INCLINED "ST" STRUT				WEB "Wc"				
			MK.	TYPE STEEL	DIA.	LENGTH	MK	TYPE STEEL	PCS	DIA	LENGTH
	24T10 -1911	1'-6 1/4"	2	A242	1.14	1'-11 3/4"	4	A242	1	1.14	2'-5 1/8"

EL END	TRUSS DESIGNATION	BEARING ANGLES				WEv	DIAGONAL "T" STRUT				(1) INCLINED "STv" STRUT				END STIFFENER MK V5			END STIFFENER MK V6			WEB "Wcv" (1)				
		MK.	TYPE STEEL	CHORD SIZE	LENGTH		MK.	TYPE STEEL	DIA.	LENGTH	MK.	TYPE STEEL	DIA.	LENGTH	TYPE STEEL	DIA.	LENGTH	TYPE STEEL	DIA.	LENGTH	MK	TYPE STEEL	PCS	DIA	LENGTH
	24T10 -1911	—	—	—	—	1'-6 1/4"	—	—	—	—	2	A242	1.14	1'-11 3/4"	—	—	—	—	—	—	4	A242	1	1.14	2'-5 1/8"

NO.	DATE	REVISION	BY
(2)	7-3-68	MAIN WEB	T.M.C.
(1)	6-26-68	AS NOTED	T.M.C.

BRIDGING TRUSS DETAILS
FOR
WORLD TRADE CENTER - N.Y.C.
FOR
THE PORT OF NEW YORK AUTHORITY

BRIDGING TRUSS 24T10 x 19'-11" LONG
WORLD TRADE CENTER TOWERS A-B

FABRICATION BY LACLEDE STEEL COMPANY

FABRICATED AT: MADISON, ILLINOIS		DESIGN DRAWING NO. 7-AB2-5	PLATE
APPROVED FOR FABRICATION BY ____ FOR P.O.N.Y.A	DATE	DRAWN BY: J.R. DATE MAY 24, 1968	
APPROVED FOR FABRICATION BY ____ FOR FABRICATOR	DATE	CHECKED BY: T.M.CHURA DATE MAY 24, 1968	IN CHARGE OF PROD. DEV.
DETAILED BY A.C. WEBER	LACLEDE STEEL CO	FABRICATION CONT. NO. W.T.C. 221	SHEET NO BT210

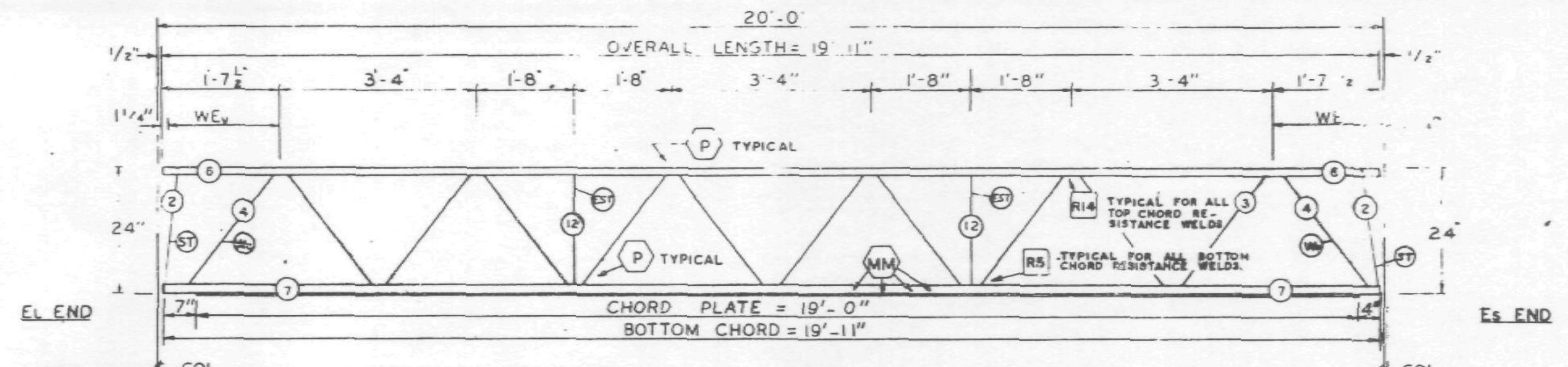

TRUSS ELEVATION

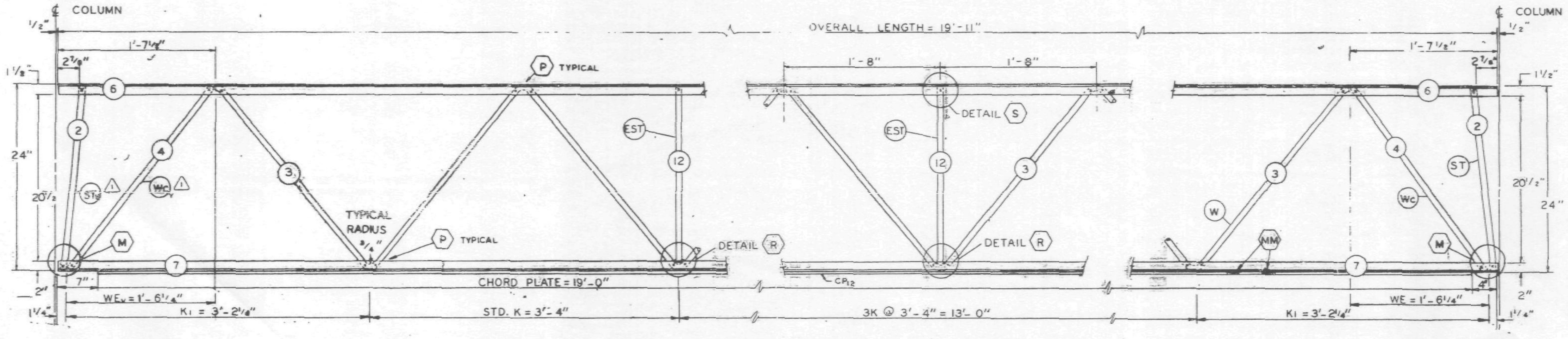

ELEVATION AT EL END

ELEVATION AT ADDED STRUT

ELEVATION AT Es END

FABRICATION REQUIRMENTS	DESIGN	TOLERANCE
CAMBER AT MIDSPAN	0"	+ ½"
DESIGN DEPTH	24"	± ¼"
PANEL "K"	3'-4"	± ¼"
PANEL "K1"	3'-2¼"	± ¼"
WEB DEPTH	23⅞"	± ¼"
OVERALL LENGTH	19'-11"	± ⅜"

ALL PANEL POINTS RESISTANCE WELDED (X).
ARC WELDS INDICATED AT SHADED AREAS AND AT BOTTOM CHORD WEB SPLICES (TYP.)
ALL WELD DETAILS SHOWN ON SHEETS ST290, ST282 ⚠1 AND ST291.
LETTERS IN HEXAGON INDICATE WELD DETAIL, ie. (A)
LETTERS AND NUMBERS IN SQUARES INDICATE RESISTANCE WELD STRENGTH IDENTIFIED IN THE QUALITY CONTROL PROGRAM, ie. [R5].
CHORD PLATE DETAILS SHOWN ON SHEET ST282 ⚠1

REF. DWG.

7-AB2-1	4-1-68
7-AB2-5	4-15-68
7-AB4-15.1	1-3-68
7-AB4-19, 28 & 41	1-3-68
7-AB4-38	4-1-68
7-AB4-16 & 18	5-6-68 ⚠1

PAINT
LACLEDE ELECTROCOAT
RED NO 10001

TRUSS DESIGNATION	TOP CHORD TWO ANGLES				BOTTOM CHORD TWO ANGLES				MAIN WEB "W"					VERTICAL "EST" STRUT					TRUSS DATA		FILLER		CHORD PLATE			
	MK.	TYPE STEEL	CHORD SIZE	LENGTH	MK	TYPE STEEL	CHORD SIZE	LENGTH	MK	TYPE STEEL	DIA	LENGTH	NO OF K	MK	TYPE STEEL	DIA	LENGTH	NUMBER REQUIRED			NO.	DIA.	MK.	TYPE STEEL	SIZE	LENGTH
24T10B-1911	6	A242	2"x1½"x.31"	19'-11"	7	A36	3"x2"x.33"	19'-11"	3	A242	1.14	25'-7½" ⚠2	5K @ 3'-4" = 16'-8"	12	A242	1.14	1'-10⅞"	2			—	—	CP12	A36	6½"x½"	19'-0"

Es END	TRUSS DESIGNATION	WE	INCLINED 'ST' STRUT				WEB "Wc"				
			MK	TYPE STEEL	DIA	LENGTH	MK	TYPE STEEL	PCS	DIA	LENGTH
	24T10B-1911	1'-6¼"	2	A242	1.14	1'-11¾"	4	A242	1	1.14	2'-5½"

EL END	TRUSS DESIGNATION	BEARING ANGLES				WEv	DIAGONAL "T" STRUT				INCLINED "STv" STRUT ⚠1				END STIFFENER MK V5			END STIFFENER MK V6			WEB "WCv" ⚠1				
		MK.	TYPE STEEL	CHORD SIZE	LENGTH		MK.	TYPE STEEL	DIA	LENGTH	MK	TYPE STEEL	DIA	LENGTH	TYPE STEEL	DIA.	LENGTH	TYPE STEEL	DIA	LENGTH	MK	TYPE STEEL	PCS	DIA	LENGTH
	24T10B-1911	—	—	—	—	1'-6¼"	—	—	—	—	2	A242	1.14	1'-11¾"	—	—	—	—	—	—	4	A242	1	1.14	2'-5½"

NO.	DATE	REVISION	BY
⚠2	7-3-68	MAIN WEB	T.M.C.
⚠1	6-26-68	AS NOTED	T.M.C.

VOID

BRIDGING TRUSS DETAILS
FOR
WORLD TRADE CENTER - N.Y.C.
FOR
THE PORT OF NEW YORK AUTHORITY

BRIDGING TRUSS 24T10B x 19'-11" LONG
WORLD TRADE CENTER TOWERS · A-B

FABRICATION BY LACLEDE STEEL COMPANY
FABRICATED AT MADISON, ILLINOIS
DESIGN DRAWING NO. 7-AB2-5 PLATE
APPROVED FOR FABRICATION BY ________ FOR P.O.N.Y.A. DATE
DRAWN BY [illegible] DATE MAY 24, 1968
APPROVED FOR FABRICATION BY ________ FOR FABRICATOR DATE
CHECKED BY T.M.CHURA DATE MAY 24, 1968
IN CHARGE PROD DEV
DETAILED BY A C WEBER
FABRICATION CONT. NO. WTC 221
SHEET NO BT2108

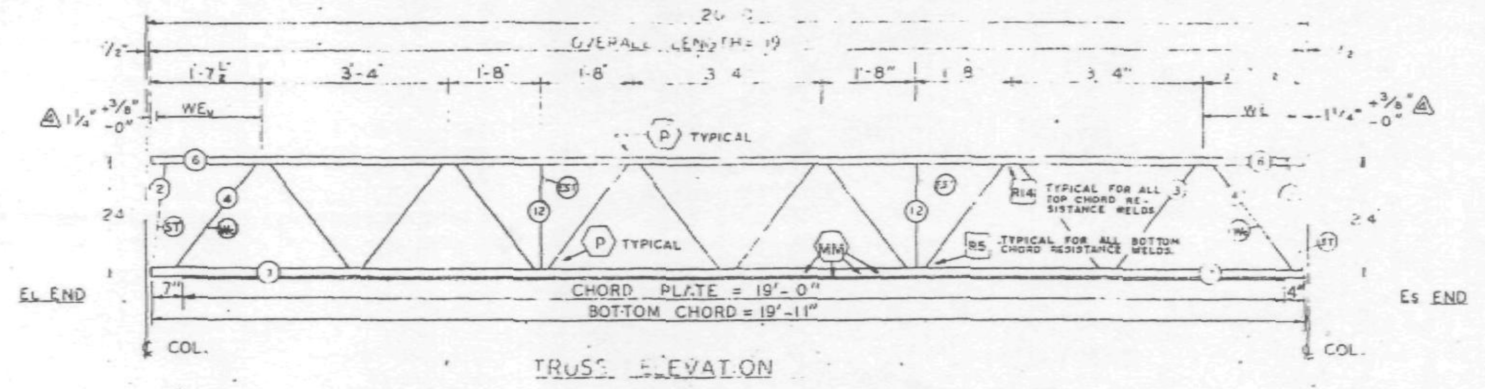

TRUSS ELEVATION

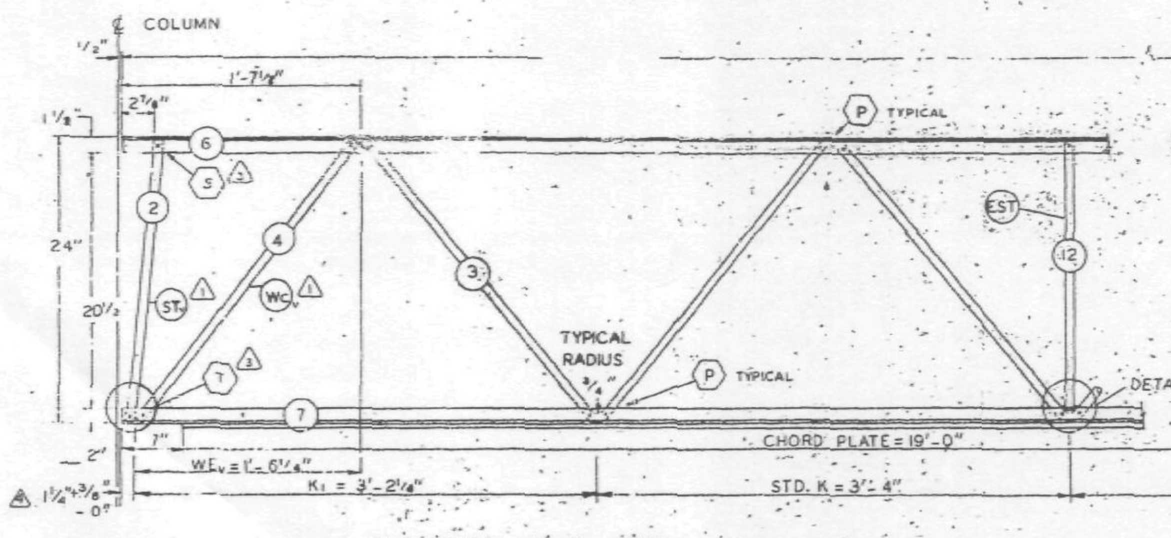

ELEVATION AT EL END

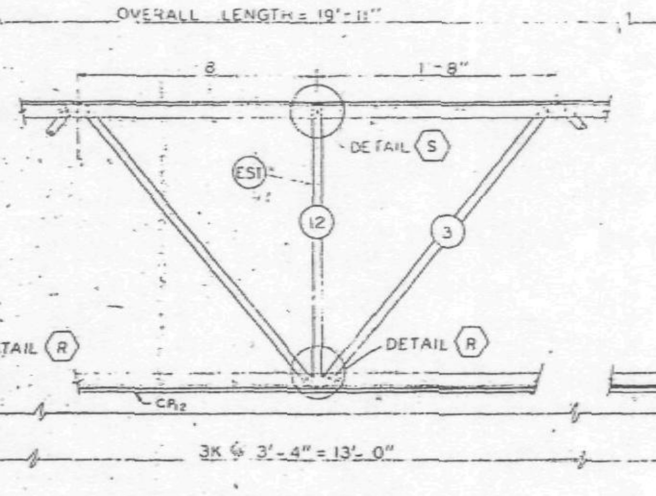

ELEVATION AT ADDED STRUT

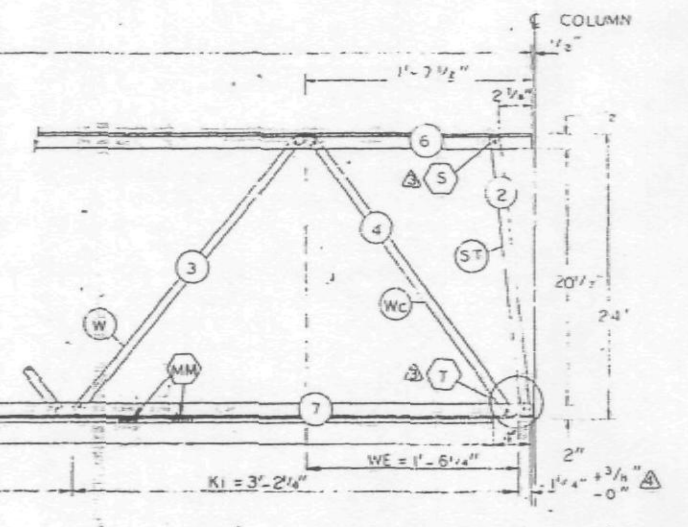

ELEVATION AT Es END

ALL PANEL POINTS RESISTANCE WELDED (RS)
ARC WELDS INDICATED AT SHADED AREAS
AND AT BOTTOM CHORD WEB SPLICES (MM)
ALL WELD DETAILS SHOWN ON SHEETS ST29C, ST282 AND ST291.
LETTERS IN HEXAGON INDICATE WELD DETAIL, i.e. (A)
LETTERS AND NUMBERS IN SQUARES INDICATE RESISTANCE WELD STRENGTH IDENTIFIED IN THE QUALITY CONTROL PROGRAM, i.e. [RS].
CHORD PLATE DETAILS SHOWN ON SHEET ST282.

REF. DWG. 7-AB2-1 4-1-68
7-AB2-5
7-AB4-15,1
7-AB4-19,20,&41
7-AB4-38
7-AB4-18 & 18 5-6-68

PAINT
LACLEDE ELECTROCOAT
RED NO 10001

TRUSS DESIGNATION	TOP CHORD TWO ANGLES				BOTTOM CHORD TWO ANGLES				MAIN WEB "W"					VERTICAL "EST" STRUT					TRUSS DATA		FILLER		CHORD PLATE			
	MK	TYPE STEEL	CHORD SIZE	LENGTH	MK	TYPE STEEL	CHORD SIZE	LENGTH	MK	TYPE STEEL	DIA	LENGTH	NO OF K	MK	TYPE STEEL	DIA	LENGTH	NUMBER REQUIRED			NO.	DIA.	MK	TYPE STEEL	SIZE	LENGTH
24T10A-1911	6	A242	2"x1½"x.31"	19'-11"	7	A36	3"x2"x.33"	19'-11"	3	A242	1.14	25'-7½"	5K @ 3'-4" = 16'-8"	12	A242	1.14	1'-10⅞"	2			—	—	CP2	A36	6½"x½"	19'-0"

Es END TRUSS DESIGNATION	WE	INCLINED "ST" STRUT				WEB "WC"				
		MK	TYPE STEEL	DIA	LENGTH	MK	TYPE STEEL	PCS	DIA	LENGTH
24T10A-1911	1'-8¼"	2	A242	1.14	1'-11¾"	4	A242	1	1.14	2'-5½"

EL END TRUSS DESIGNATION	BEARING ANGLES				WE	DIAGONAL "T" STRUT				INCLINED "ST" STRUT				END STIFFENER MK V5			END STIFFENER MK V6			WEB "WC"				
	MK	TYPE STEEL	CHORD SIZE	LENGTH		MK	TYPE STEEL	DIA	LENGTH	MK	TYPE STEEL	DIA	LENGTH	TYPE STEEL	DIA	LENGTH	TYPE STEEL	DIA	LENGTH	MK	TYPE STEEL	PCS	DIA	LENGTH
24T10A-1911	—	—	—	—	1'-6¼"	—	—	—	—	2	A242	1.14	1'-11¾"	—	—	—	—	—	—	4	A242	1	1.14	2'-5½"

NO.	DATE	REVISION	BY
4	9-5-68	END DIST (2)	T.M.C.
3	7-8-68	AS NOTED	T.M.C.
2	7-3-68	MAIN WEB	T.M.C.
1	6-26-68	AS NOTED	T.M.C.

BRIDGING TRUSS DETAILS
FOR
WORLD TRADE CENTER - N.Y.C.
FOR
THE PORT OF NEW YORK AUTHORITY

BRIDGING TRUSS 24T10A x 19'-11" LONG
WORLD TRADE CENTER TOWERS A-B

FABRICATED BY LACLEDE STEEL COMPANY
FABRICATED AT MADISON, ILLINOIS
DESIGN DRAWING NO. 7-AB2-5
APPROVED DATE 9/10/68
DRAWN BY LWH DATE MAY 24 1968
CHECKED BY T.M.CHUNA DATE MAY 24, 1968
FABRICATION NO. 221
BT210A

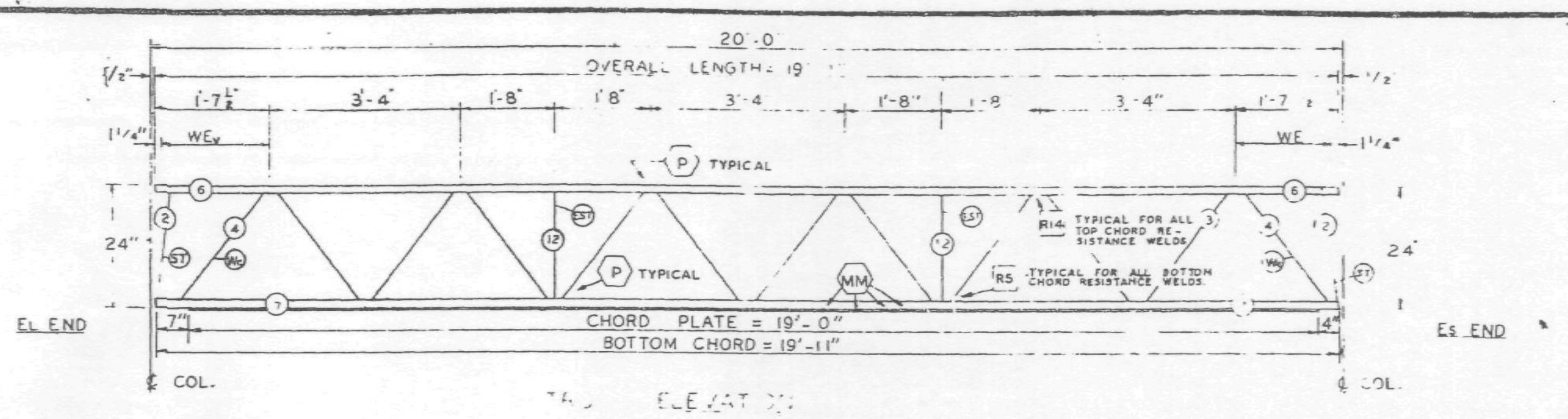

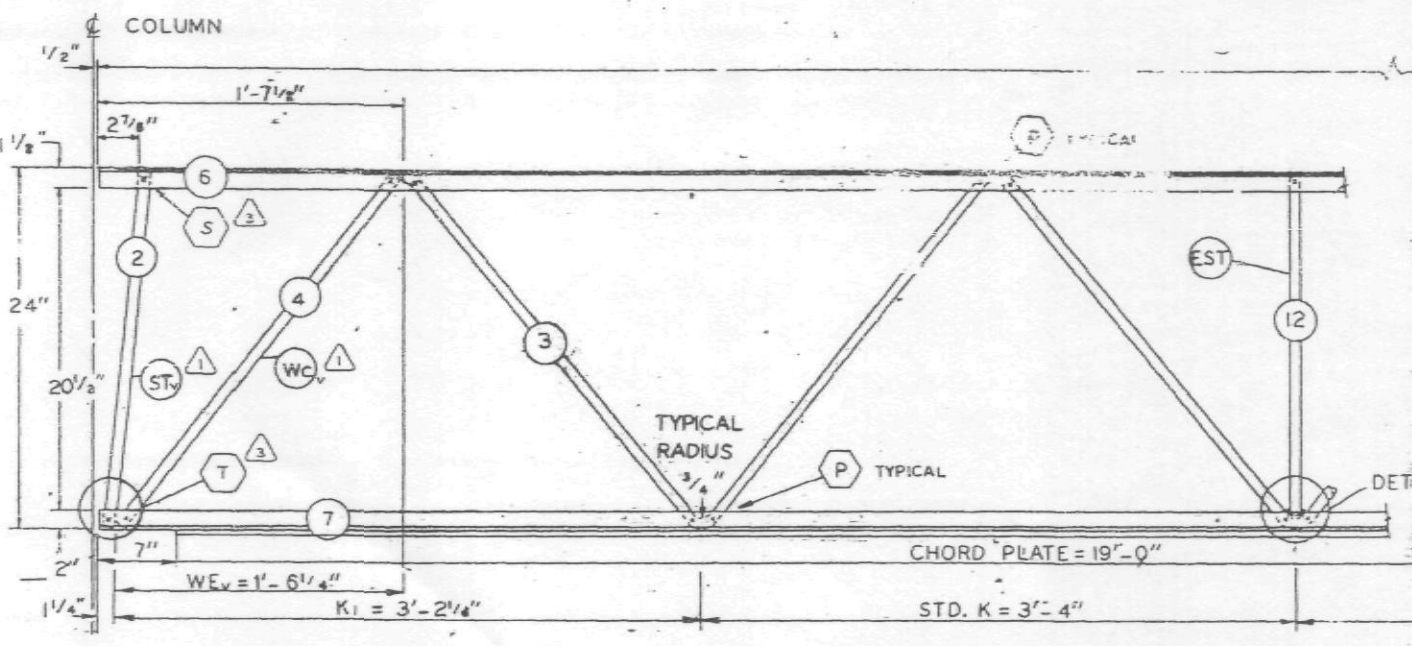

ELEVATION AT EL END

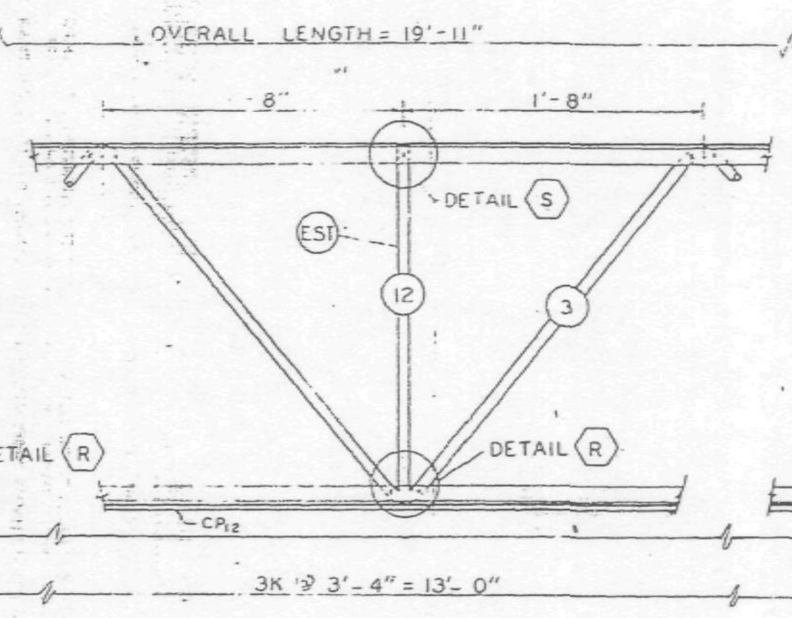

ELEVATION AT ADDED STRUT

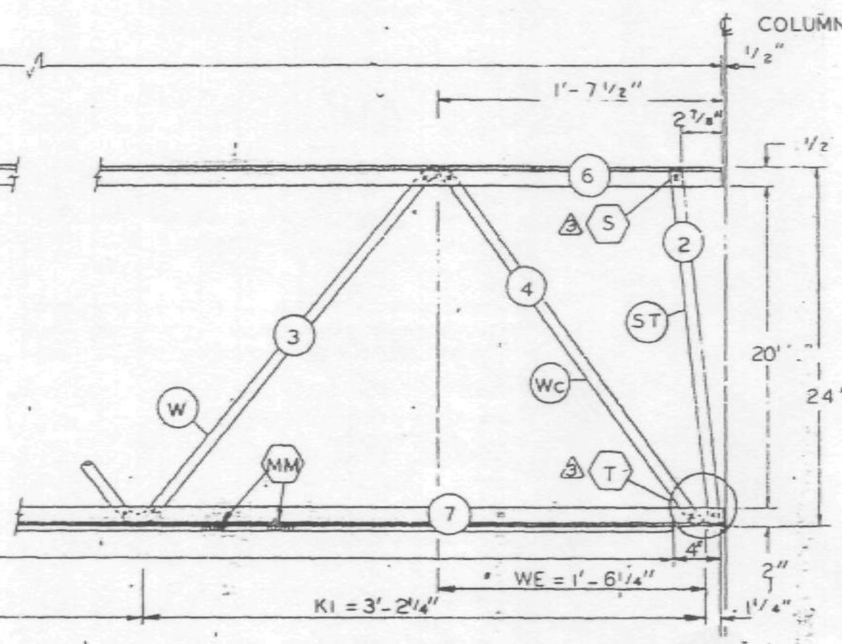

ELEVATION AT Es END

FABRICATION REQUIRMENTS	DESIGN	TOLERANCE
CAMBER AT MIDSPAN	0"	+ 1/8"
DESIGN DEPTH	24"	± 1/4"
PANEL "K"	3'-4"	± 1/4"
PANEL "K1"	3'-2 1/4"	± 1/4"
WEB DEPTH	23 7/8"	± 1/4"
OVERALL LENGTH	19'-11"	± 3/8"

ALL PANEL POINTS RESISTANCE WELDED (X)
ARC WELDS INDICATED AT SHADED AREAS
AND AT BOTTOM CHORD WEB SPLICES (MM)
ALL WELD DETAILS SHOWN ON SHEETS ST290, ST282 (1)
AND ST291.
LETTERS IN HEXAGON INDICATE WELD DETAIL, ie., (A)
LETTERS AND NUMBERS IN SQUARES INDICATE RESISTANCE WELD STRENGTH IDENTIFIED IN THE QUALITY CONTROL PROGRAM, ie., [R5].
CHORD PLATE DETAILS SHOWN ON SHEET ST.282 (1)

REF. DWG.

7-AB2-1	4-1-68
7-AB2-5	4-15-68
7-AB4-15.1	1-3-68
7-AB4-19, 28 & 41	1-3-68
7-AB4-38	4-1-68
7-AB4-16 & 18	5-6-68 (1)

PAINT
LACLEDE ELECTROCOAT
RED NO. 10001

TRUSS DESIGNATION	TOP CHORD TWO ANGLES				BOTTOM CHORD TWO ANGLES				MAIN WEB "W"					VERTICAL "EST" STRUT					TRUSS DATA		FILLER		CHORD PLATE			
	MK.	TYPE STEEL	CHORD SIZE	LENGTH	MK.	TYPE STEEL	CHORD SIZE	LENGTH	MK	TYPE STEEL	DIA	LENGTH	NO OF K	MK	TYPE STEEL	DIA	LENGTH	NUMBER REQUIRED			NO.	DIA.	MK.	TYPE STEEL	SIZE	LENGTH
2[illegible]T10A-1911	6	A242	2" x 1 1/2" x .31"	19'-11"	7	A36	3" x 2" x .33"	19'-11"	3	A242	1.14	25'-7 1/2" (2)	5K ± 3'-4" = 16'-8"	12	A242	1.14	1'-10 7/8"	2			—	—	CP_{12}	A36	6 1/2" x 1/2"	19'-0"

Es END	TRUSS DESIGNATION	WE	INCLINED "ST" STRUT				WEB "Wc"				
			MK.	TYPE STEEL	DIA	LENGTH	MK	TYPE STEEL	PCS	DIA	LENGTH
	24T10A-1911	1'-6 1/4"	2	A242	1.14	1'-11 3/4"	4	A242	1	1.14	2'-5 1/2"

EL END	TRUSS DESIGNATION	BEARING ANGLES				WEv	DIAGONAL "T" STRUT				INCLINED "STv" STRUT (1)				END STIFFENER MK V5			END STIFFENER MK V6			WEB "Wcv" (1)				
		MK.	TYPE STEEL	CHORD SIZE	LENGTH		MK.	TYPE STEEL	DIA	LENGTH	MK	TYPE STEEL	DIA	LENGTH	TYPE STEEL	DIA	LENGTH	TYPE STEEL	DIA	LENGTH	MK	TYPE STEEL	PCS	DIA	LENGTH
	24T10A-1911	—	—	—	—	1'-6 1/4"	—	—	—	—	2	A242	1.14	1'-11 1/2"	—	—	—	—	—	—	4	A242	1	1.14	2'-5 1/2"

NO.	DATE	REVISION	BY
3	7-8-68	AS NOTED	T.M.C.
2	7-3-68	MAIN WEB	T.M.C.
1	6-26-68	AS NOTED	T.M.C.

BRIDGING TRUSS DETAILS
FOR
WORLD TRADE CENTER - N.Y.C.
FOR
THE PORT OF NEW YORK AUTHORITY

BRIDGING TRUSS 24T10A x 19'-11" LONG
WORLD TRADE CENTER TOWERS A-B

FABRICATION BY LACLEDE STEEL COMPANY
FABRICATED AT MADISON, ILLINOIS
DESIGN DRAWING NO. 7-AB2-5
PLATE
APPROVED FOR FABRICATION BY JW FOR P.O.N.Y.A. DATE 7/9/68
DRAWN BY [illegible] DATE MAY 24, 1968
APPROVED FOR FABRICATION BY ______ FOR FABRICATOR DATE ______
CHECKED BY T.M.CHURA DATE MAY 24, 1968
IN CHARGE PROD. [illegible]
DETAILED BY [illegible] WEBER
FABRICATION CONT. NO. WT - 221
SHEET BT210A

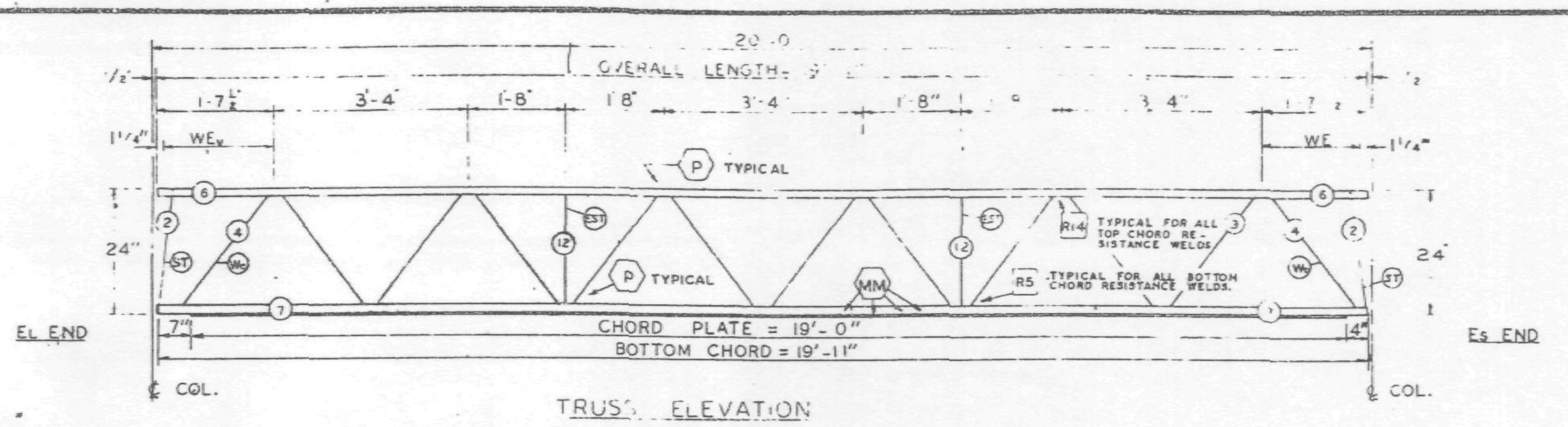

TRUSS ELEVATION

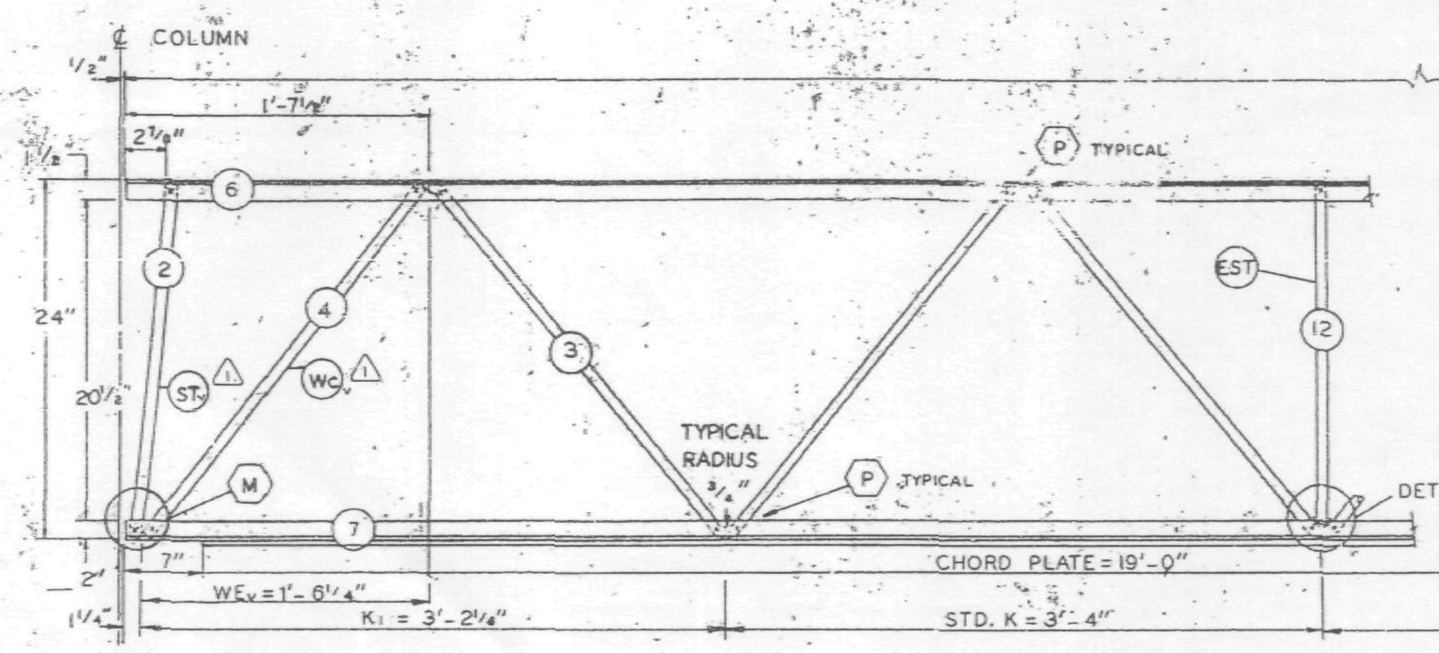

ELEVATION AT EL END

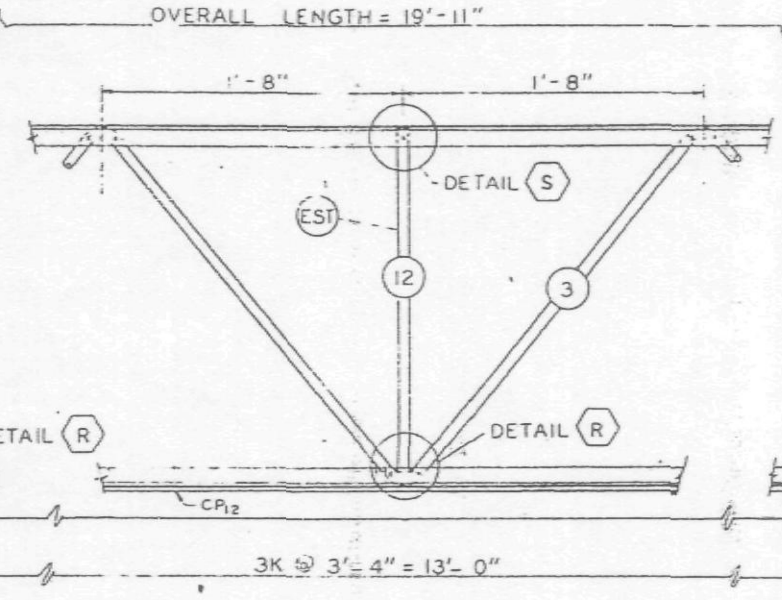

ELEVATION AT ADDED STRUT

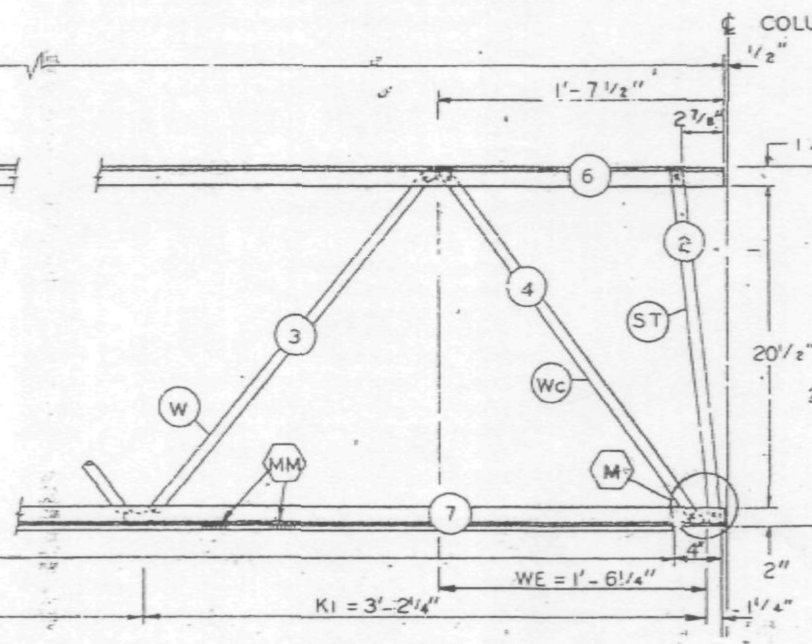

ELEVATION AT Es END

FABRICATION REQUIRMENTS	DESIGN	TOLERANCE
CAMBER AT MIDSPAN	0"	+ 3/8"
DESIGN DEPTH	24"	± 1/4"
PANEL "K"	3'-4"	± 1/4"
PANEL "K1"	3'-2 1/4"	± 1/4"
WEB DEPTH	23 7/8"	± 1/4"
OVERALL LENGTH	19'-11"	± 3/8"

ALL PANEL POINTS RESISTANCE WELDED (X)
ARC WELDS INDICATED AT SHADED AREAS
AND AT BOTTOM CHORD WEB SPLICES (MM)
ALL WELD DETAILS SHOWN ON SHEETS ST290, ST282 AND ST291. (1)
LETTERS IN HEXAGON INDICATE WELD DETAIL, ie., (A)
LETTERS AND NUMBERS IN SQUARES INDICATE RESISTANCE WELD STRENGTH IDENTIFIED IN THE QUALITY CONTROL PROGRAM, ie., [R5].
CHORD PLATE DETAILS SHOWN ON SHEET ST282 (1)

REF DWG.

7-AB2-1	4-1-68
7-AB2-5	4-15-68
7-AB4-15.1	1-3-68
7-AB4-19, 28 & 41	1-3-68
7-AB4-38	4-1-68
7-AB4-16 & 18	5-6-68 (1)

PAINT
LACLEDE ELECTROCOAT
RED NO 10001

TRUSS DESIGNATION	TOP CHORD TWO ANGLES				BOTTOM CHORD TWO ANGLES				MAIN WEB "W"					VERTICAL "EST" STRUT					TRUSS DATA		FILLER		CHORD PLATE			
	MK.	TYPE STEEL	CHORD SIZE	LENGTH	MK.	TYPE STEEL	CHORD SIZE	LENGTH	MK	TYPE STEEL	DIA	LENGTH	NO OF K	MK	TYPE STEEL	DIA	LENGTH	NUMBER REQUIRED			NO.	DIA.	MK.	TYPE STEEL	SIZE	LENGTH
24T10A-1911	6	A242	2" x 1 1/2" x .31"	19'-11"	7	A36	3" x 2" x .33"	19'-11"	3	A242	1.14	30'-6 1/2"	5K @ 3'-4" = 16'-8"	12	A242	1.14	1'-10 7/8"	2			—	—	CP12	A36	6 1/2" x 1/2"	19'-0"

Es END	TRUSS DESIGNATION	WE	INCLINED "ST" STRUT				WEB "Wc"				
			MK.	TYPE STEEL	DIA	LENGTH	MK	TYPE STEEL	PCS	DIA	LENGTH
	24T10A-1911	1'-6 1/4"	2	A242	1.14	1'-11 3/4"	4	A242	1	1.14	2'-5 1/2"

EL END	TRUSS DESIGNATION	BEARING ANGLES				WEv	DIAGONAL "T" STRUT				INCLINED "STv" STRUT (1)				END STIFFENER MK VS			END STIFFENER MK VS			WEB "Wcv" (1)				
		MK.	TYPE STEEL	CHORD SIZE	LENGTH		MK.	TYPE STEEL	DIA	LENGTH	MK	TYPE STEEL	DIA	LENGTH	TYPE STEEL	DIA	LENGTH	TYPE STEEL	DIA	LENGTH	MK	TYPE STEEL	PCS	DIA	LENGTH
	24T10A-1911	—	—	—	—	1'-6 1/4"	—	—	—	—	2	A242	1.14	1'-11 3/4"	—	—	—	—	—	—	4	A242	1	1.14	2'-5 1/2"

NO.	DATE	REVISION	BY
1	6-26-68	AS NOTED	T.M.C

BRIDGING TRUSS DETAILS
FOR
WORLD TRADE CENTER ~ N.Y.C.
FOR
THE PORT OF NEW YORK AUTHORITY

BRIDGING TRUSS 24T10A x 19'-11" LONG
WORLD TRADE CENTER TOWERS - A-B

FABRICATION BY LACLEDE STEEL COMPANY

FABRICATED AT MADISON, ILLINOIS		DESIGN DRAWING NO 7-AB2-5	PLATE
APPROVED FOR FABRICATION BY JW FOR P.O.N.Y.A	DATE 7/5/68	DRAWN BY [illegible] DATE MAY 24 1968	
APPROVED FOR FABRICATION BY ____ FOR FABRICATOR	DATE	CHECKED BY T.M.CHURA DATE MAY 24 1968	IN CHARGE PROD
DETAILED BY A C WEBER		FABRICATION CONT NO WT 221	SHEET BT210A

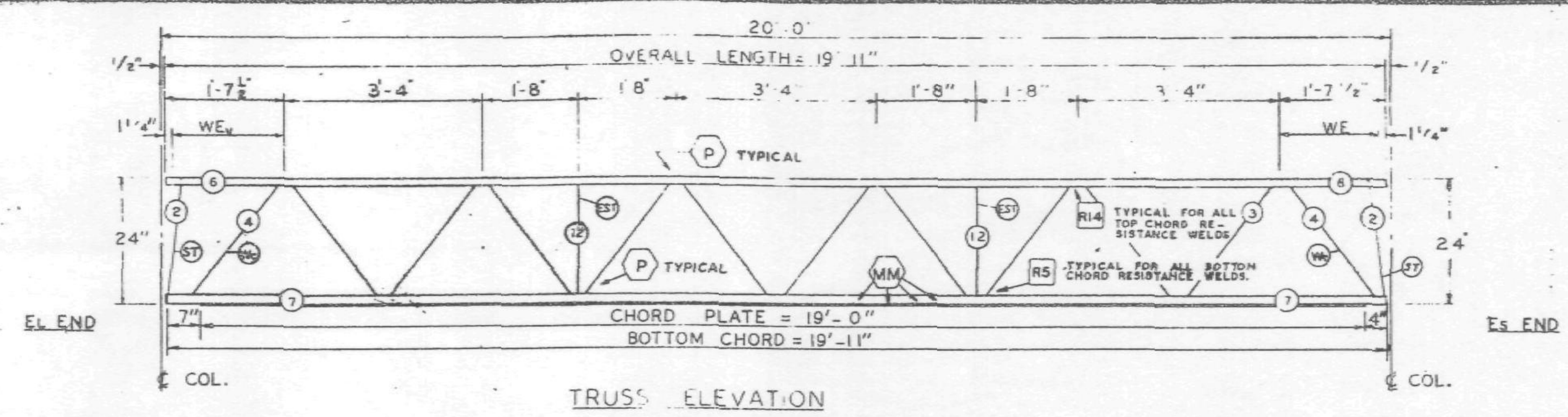

TRUSS ELEVATION

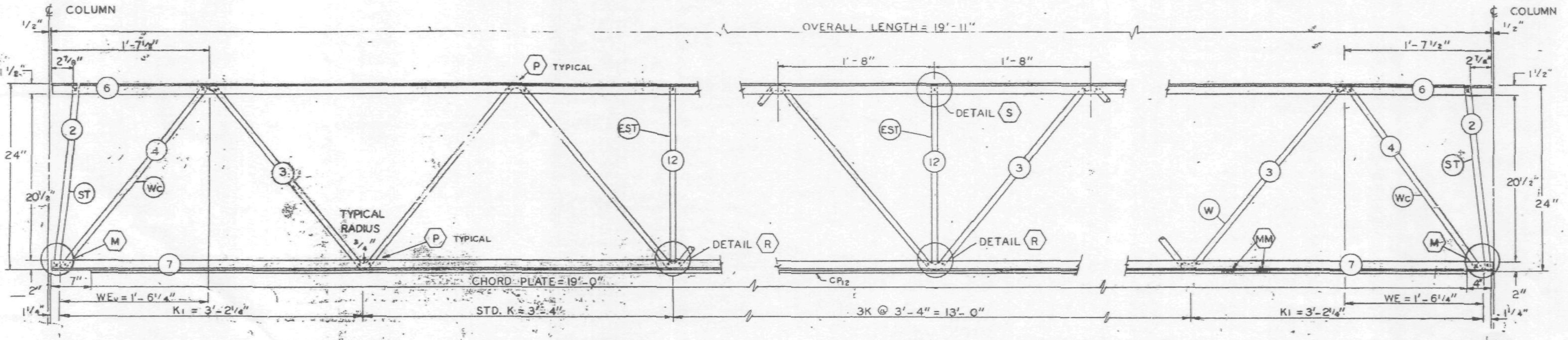

ELEVATION AT EL END

ELEVATION AT ADDED STRUT

ELEVATION AT Es END

FABRICATION REQUIRMENTS	DESIGN	TOLERANCE
CAMBER AT MIDSPAN	0"	+ 1/8"
DESIGN DEPTH	24"	± 1/4"
PANEL "K"	3'-4"	± 1/4"
PANEL "K1"	3'-2¼"	± 1/4"
WEB DEPTH	23½"	± 1/4"
OVERALL LENGTH	19'-11"	± 3/8"

ALL PANEL POINTS RESISTANCE WELDED (X).
ARC WELDS INDICATED AT SHADED AREAS AND AT BOTTOM CHORD WEB SPLICES.
ALL WELD DETAILS SHOWN ON SHEETS ST290, ST281, AND ST291.
LETTERS IN HEXAGON INDICATE WELD DETAIL, i.e., (A)
LETTERS AND NUMBERS IN SQUARES INDICATE RESISTANCE WELD STRENGTH IDENTIFIED IN THE QUALITY CONTROL PROGRAM, i.e., [R5].
CHORD PLATE DETAILS SHOWN ON SHEET ST281.

REF. DWG.

7-AB2-1	4-1-68
7-AB2-5	4-15-68
7-AB4-15.1	1-3-68
7-AB4-19, 28 & 41	1-3-68
7-AB4-38	4-1-68
7-AB4-16 & 18	5-17-68

PAINT
LACLEDE ELECTROCOAT
RED NO 10001

TRUSS DESIGNATION	TOP CHORD TWO ANGLES				BOTTOM CHORD TWO ANGLES				MAIN WEB "W"					VERTICAL "EST" STRUT					TRUSS DATA		FILLER		CHORD PLATE			
	MK.	TYPE STEEL	CHORD SIZE	LENGTH	MK.	TYPE STEEL	CHORD SIZE	LENGTH	MK.	TYPE STEEL	DIA	LENGTH	NO OF K	MK	TYPE STEEL	DIA	LENGTH	NUMBER REQUIRED			NO.	DIA.	MK.	TYPE STEEL	SIZE	LENGTH
24T10A-1911	6	A242	2"x 1½"x .31"	19"	7	A36	3"x 2"x .33"	19'-11"	3	A242	1.14	30'-6½"	5K @ 3'-4" = 16'-8"	12	A242	1.14	1'-10⅞"	2			—	—	CP_{12}	A36	6½"x ½"	19'-0"

Es	TRUSS DESIGNATION	WE	INCLINED "ST" STRUT				WEB "Wc"				
			MK.	TYPE STEEL	DIA.	LENGTH	MK	TYPE STEEL	PCS	DIA	LENGTH
	24T10A-1911	1'-6¼"	2	A242	1.14	1'-11¾"	4	A242	1	1.14	2'-5⅛"

EL END	TRUSS DESIGNATION	BEARING ANGLES				WEV	DIAGONAL "T" STRUT				INCLINED "ST" STRUT				END STIFFENER MK V5			END STIFFENER MK V6			WEB "Wc"				
		MK.	TYPE STEEL	CHORD SIZE	LENGTH		MK.	TYPE STEEL	DIA.	LENGTH	MK.	TYPE STEEL	DIA	LENGTH	TYPE STEEL	DIA.	LENGTH	TYPE STEEL	DIA	LENGTH	MK	TYPE STEEL	PCS	DIA	LENGTH
	24T10A-1911	—	—	—	—	1'-6¼"	—	—	—	—	2	A242	1.14	1'-11¾"	—	—	—	—	—	—	4	A242	1	1.14	2'-5⅛"

NO.	DATE	REVISION	BY

BRIDGING TRUSS DETAILS
FOR
WORLD TRADE CENTER - N.Y.C.
FOR
THE PORT OF NEW YORK AUTHORITY

BRIDGING TRUSS 24T10A x 19'-11" LONG
WORLD TRADE CENTER TOWERS - A-B

FABRICATION BY LACLEDE STEEL COMPANY
FABRICATED AT MADISON, ILLINOIS
DESIGN DRAWING NO. 7-AB2-6
PLATE
APPROVED FOR FABRICATION BY FOR P.O.N.Y.A. DATE 6/6/68
DRAWN BY [illegible] DATE MAY 24, 1968
APPROVED FOR FABRICATION BY [illegible] DATE
CHECKED BY T.M. CHURA DATE MAY 24, 1968
IN CHARGE PROD
DETAILED BY A.C. WEBER
FABRICATION CONT. NO. W.T. - 221
SHEET BT210A

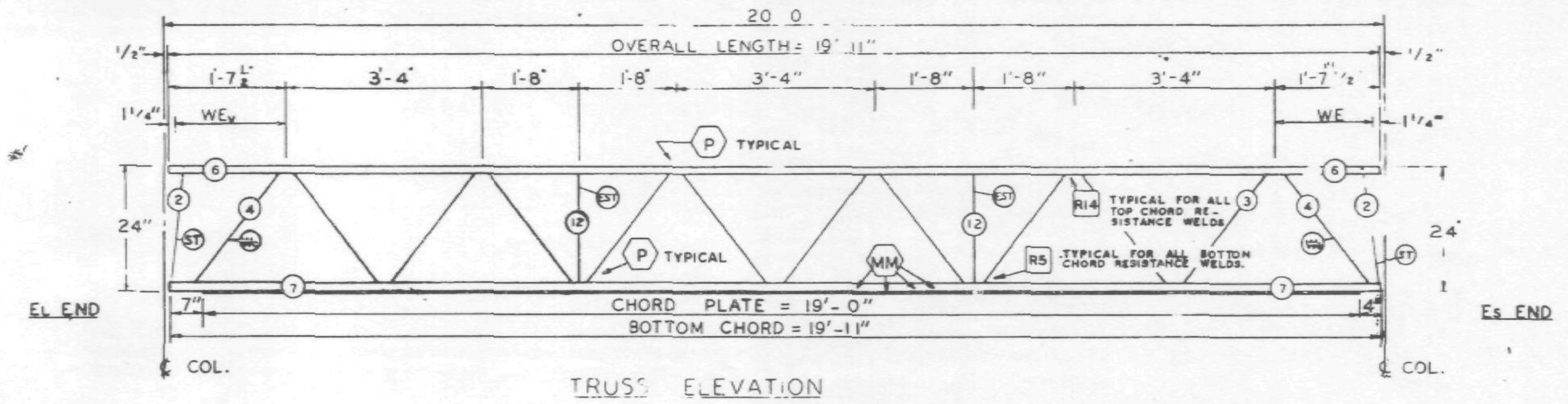

TRUSS ELEVATION

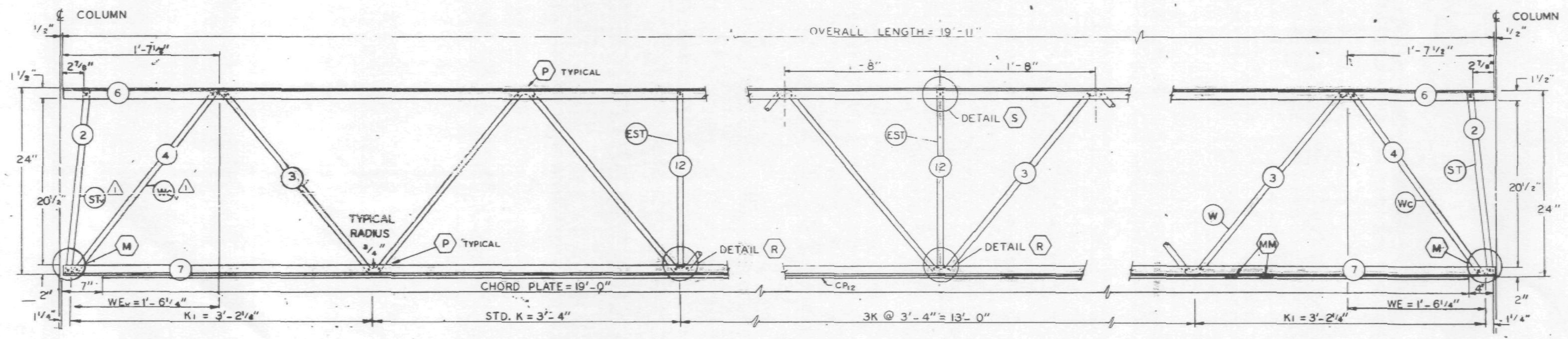

ELEVATION AT EL END

ELEVATION AT ADDED STRUT

ELEVATION AT Es END

FABRICATION REQUIRMENTS		
	DESIGN	TOLERANCE
CAMBER AT MIDSPAN	0"	+ ⅛"
DESIGN DEPTH	24"	± ¼"
PANEL "K"	3'-4"	± ¼"
PANEL "K1"	3'-2¼"	± ¼"
WEB DEPTH	23⅞"	± ¼"
OVERALL LENGTH	19'-11"	+ ⅛"

ALL PANEL POINTS RESISTANCE WELDED (x).
ARC WELDS INDICATED AT SHADED AREAS AND AT BOTTOM CHORD WEB SPLICES (▬)
ALL WELD DETAILS SHOWN ON SHEETS ST290, ST282 AND ST291. △1
LETTERS IN HEXAGON INDICATE WELD DETAIL, ie., ⟨A⟩
LETTERS AND NUMBERS IN SQUARES INDICATE RESISTANCE WELD STRENGTH IDENTIFIED IN THE QUALITY CONTROL PROGRAM, ie., [R5].
CHORD PLATE DETAILS SHOWN ON SHEET ST282 △1

REF. DWG.

7-AB2-1	4-1-68
7-AB2-5	4-15-68
7-AB4-15.1	1-3-68
7-AB4-19, 28 & 41	1-3-68
7-AB4-38	4-1-68
7-AB4-16 & 18	5-6-68 △1

PAINT
LACLEDE ELECTROCOAT
RED NO 10001

TRUSS DESIGNATION	TOP CHORD TWO ANGLES				BOTTOM CHORD TWO ANGLES				MAIN WEB "W"					VERTICAL "EST" STRUT					TRUSS DATA		FILLER		CHORD PLATE			
	MK.	TYPE STEEL	CHORD SIZE	LENGTH	MK.	TYPE STEEL	CHORD SIZE	LENGTH	MK	TYPE STEEL	DIA	LENGTH	NO OF K	MK	TYPE STEEL	DIA	LENGTH	NUMBER REQUIRED			NO.	DIA.	MK.	TYPE STEEL	SIZE	LENGTH
24T10A-1911	6	A242	2"x 1½"x .31"	19'-11"	7	A36	3"x 2"x .33"	19'-11"	3	A242	1.14	25'-7½" △2	5K @ 3'-4" = 16'-8"	12	A242	1.14	1'-10⅞"	2			—	—	CPL	A36	6½"x ¼"	19'-0"

Es END	TRUSS DESIGNATION	WE	INCLINED "ST" STRUT				WEB "Wc"				
			MK.	TYPE STEEL	DIA.	LENGTH	MK	TYPE STEEL	PCS	DIA	LENGTH
	24T10A-1911	1'-6¼"	2	A242	1.14	1'-11¾"	4	A242	1	1.14	2'-5½"

EL END	TRUSS DESIGNATION	BEARING ANGLES				WEy	DIAGONAL "T" STRUT				INCLINED "STy" STRUT △1				END STIFFENER						WEB "Wc" △1				
															MK V5			MK V6							
		MK.	TYPE STEEL	CHORD SIZE	LENGTH		MK.	TYPE STEEL	DIA.	LENGTH	MK.	TYPE STEEL	DIA	LENGTH	TYPE STEEL	DIA.	LENGTH	TYPE STEEL	DIA	LENGTH	MK	TYPE STEEL	PCS	DIA	LENGTH
	24T10A-1911	—	—	—	—	1'-6¼"	—	—	—	—	2	A242	1.14	1'-11¾"	—	—	—	—	—	—	4	A242	1	1.14	2'-5½"

NO.	DATE	REVISION	BY
△2	7-3-68	MAIN WEB	T.M.C.
△1	6-26-68	AS NOTED	T.M.C.

Void

BRIDGING TRUSS DETAILS
FOR
WORLD TRADE CENTER - N.Y.C.
FOR
THE PORT OF NEW YORK AUTHORITY

BRIDGING TRUSS 24T10A x 19'-11" LONG
WORLD TRADE CENTER TOWERS - A-B

FABRICATION BY LACLEDE STEEL COMPANY

FABRICATED AT: MADISON, ILLINOIS		DESIGN DRAWING NO 7-AB2-5	PLATE
APPROVED FOR FABRICATION BY. ________ FOR P.O.N.Y.A	DATE	DRAWN BY: [illegible] DATE MAY 24, 1968	
APPROVED FOR FABRICATION BY ________ FOR FABRICATOR	DATE	CHECKED BY T.M.CHURA DATE MAY 24, 1968	IN CHARGE PROD OF
DETAILED BY A C WEBER		FABRICATION CONT. NO WTC 221	SHEET BT210A

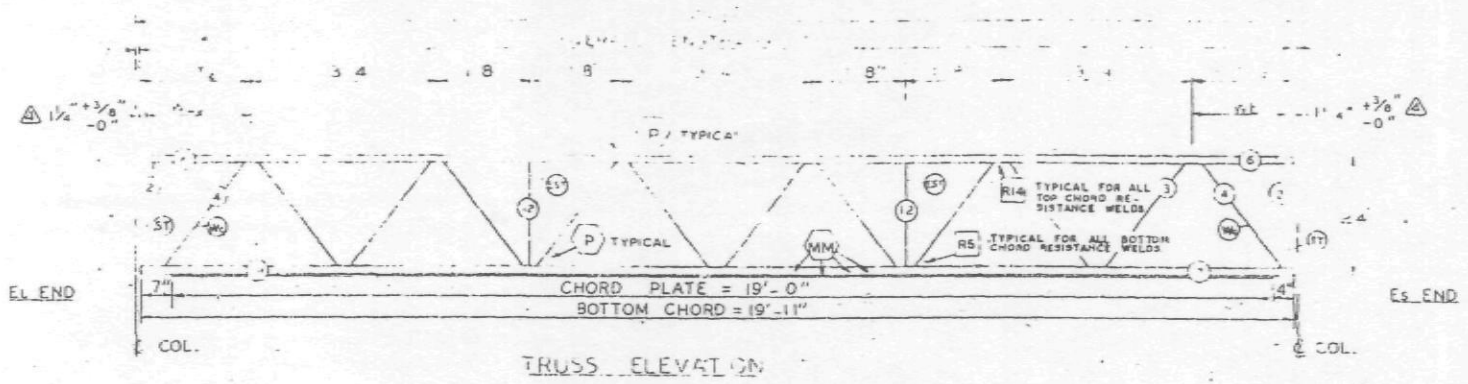

TRUSS ELEVATION

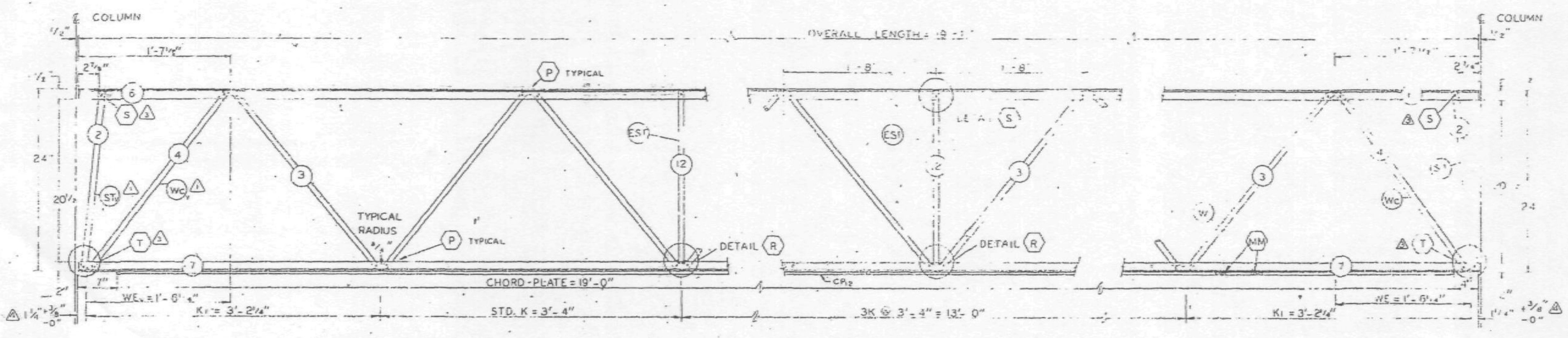

ELEVATION AT EL END ELEVATION AT ADDED STRUT ELEVATION AT ES END

ALL PANEL POINTS RESISTANCE WELDED (X)
ALL WELDS INDICATED AT SHADED AREAS
AND AT BOTTOM CHORD WEB SPLICES (MM)
ALL WELD DETAILS SHOWN ON SHEETS ST290, ST282 △(1)
AND ST291
LETTERS IN HEXAGON INDICATE WELD DETAIL.
LETTERS AND NUMBERS IN SQUARES INDICATE RESISTANCE WELD STRENGTH IDENTIFIED IN THE QUALITY CONTROL PROGRAM, i.e., [RS].
CHORD PLATE DETAILS SHOWN ON SHEET ST282 △(1)

REF DWG. 7-A82-1 4-1-68
7-A82-5 [illegible]
7-A84-15 1-3-68
7-A84-19, 28 & 41 [illegible]
7-A84-38 4-1-68
7-A84-16 & 18 5-6-68 △(1)

PAINT
LACLEDE ELECTROCOAT
RED NO. 1000

TRUSS DESIGNATION	TOP CHORD TWO ANGLES				BOTTOM CHORD TWO ANGLES				MAIN WEB "WH"					VERTICAL "EST" STRUT					TRUSS DATA		FILLER		CHORD PLATE			
	MK.	TYPE STEEL	CHORD SIZE	LENGTH	MK.	TYPE STEEL	CHORD SIZE	LENGTH	MK.	TYPE STEEL	DIA	LENGTH	NO. OF K	MK.	TYPE STEEL	DIA	LENGTH	NUMBER REQUIRED			NO.	DIA	MK.	TYPE STEEL	SIZE	LENGTH
24T108-1911	6	A242	2"×1½"×.312	19'-11"	7	A36	3"×2"×.33"	19'-11"	3	A242	1.14	25'-7½" △(2)	5K @ 3'-4" = 16'-8"	12	A242	1.14	1'-10⅞"	2			—	—	CR_2	A36	6½"×½"	19'-0"

ES END	TRUSS DESIGNATION	WE	INCLINED "ST" STRUT				WEB "WC"				
			MK.	TYPE STEEL	DIA	LENGTH	MK.	TYPE STEEL	PCS	DIA	LENGTH
	24T[illegible]-1911	1'-8¼"	2	A242	1.14	1'-11[illegible]	4	A242	1	1.14	2'-5½"

EL END	TRUSS DESIGNATION	BEARING ANGLES				WE_1	DIAGONAL "T" STRUT				INCLINED "ST_1" STRUT △(1)				END STIFFENER MK V5			END STIFFENER MK V6			WEB "WC_1" △(1)				
		MK.	TYPE STEEL	SIZE	LENGTH		MK.	TYPE STEEL	DIA	LENGTH	MK.	TYPE STEEL	DIA	LENGTH	TYPE STEEL	DIA	LENGTH	TYPE STEEL	DIA	LENGTH	MK.	TYPE STEEL	PCS	DIA	LENGTH
	24T108-1911				—	1'-8¼"	—	—	—	—	2	A242	1.14	1'-11½"	—	—	—	—	—	—	4	A242	1	1.14	2'-5½"

NO.	DATE	REVISION	BY
△(4)	9-5-68	END DIST. (2)	T.M.C.
△(3)	7-8-68	AS NOTED	T.M.C.
△(2)	7-3-68	MAIN WEB	T.M.C.
△(1)	6-26-68	AS NOTED	T.M.C.

BRIDGING TRUSS DETAILS
FOR
WORLD TRADE CENTER - N.Y.C.
FOR
THE PORT OF NEW YORK AUTHORITY

BRIDGING TRUSS 24T108 × 19'-11" LONG
WORLD TRADE CENTER TOWERS A-B

FOR LACLEDE STEEL COMPANY

FABRICATED AT MADISON ILL.
DESIGN DRAWING NO. 7-A82-5
APPROVED FOR FABRICATION — DATE 9/10/68
DRAWN BY [illegible] DATE MAY 24, 1968
CHECKED BY T.M. CHUBA DATE MAY 24, 1968
IN CHARGE PROD. DEV.
FABRICATION CONT. NO. 221
SHEET NO. BT2108

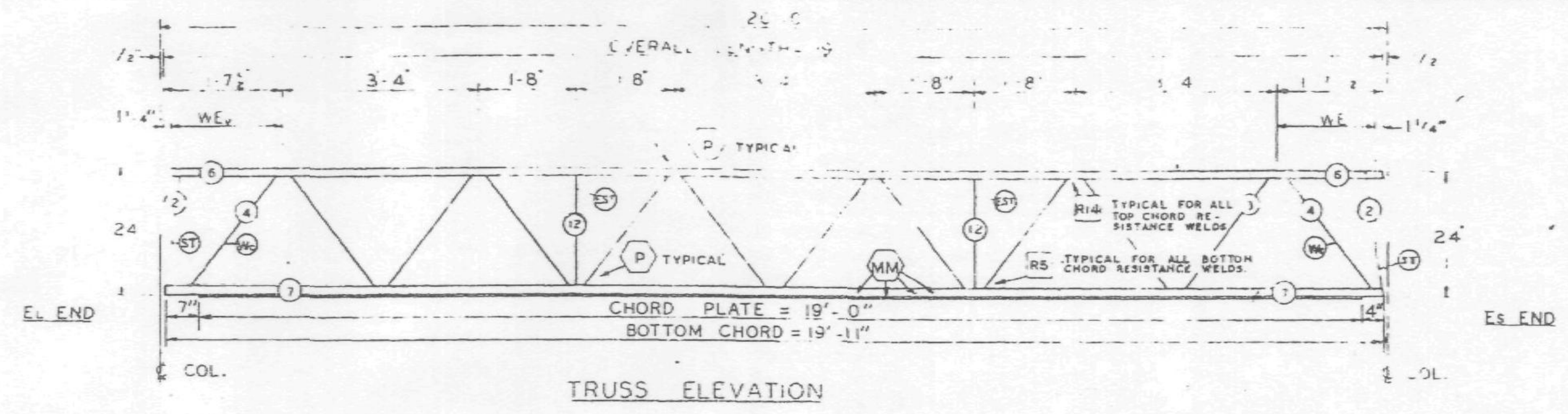

TRUSS ELEVATION

CAMBER AT MIDSPAN	0	
DESIGN DEPTH	24	
	3-4	
	3-2 1/4	
WEB DEPTH	23	
OVERALL LENGTH	19-11	

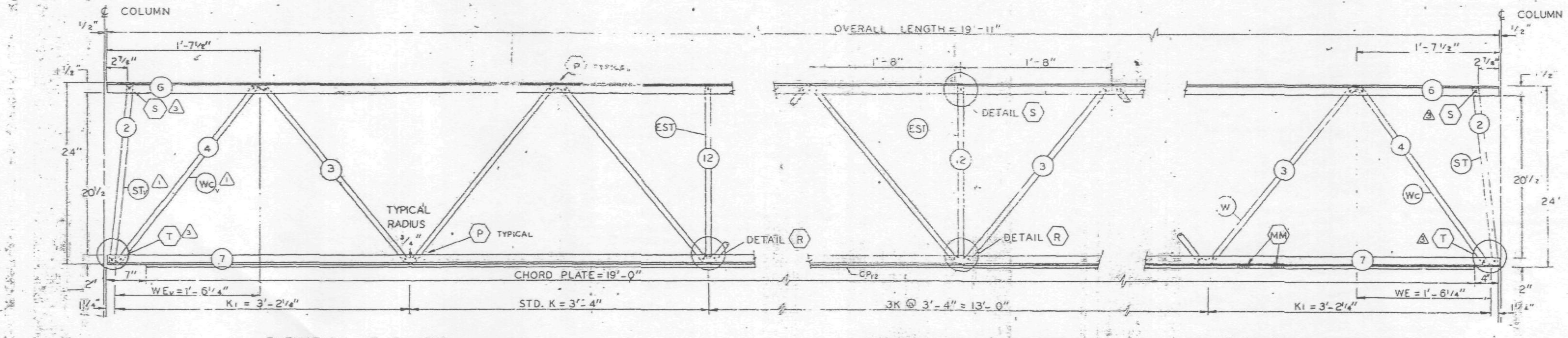

ELEVATION AT EL END

ELEVATION AT ADDED STRUT

ELEVATION AT ES END

ALL PANEL POINTS RESISTANCE WELDED (x).
ARC WELDS INDICATED AT SHADED AREAS
AND AT BOTTOM CHORD WEB SPLICES
ALL WELD DETAILS SHOWN ON SHEETS ST290, ST282 (1)
AND ST291.
LETTERS IN HEXAGON INDICATE WELD DETAIL, ie.,
LETTERS AND NUMBERS IN SQUARES INDICATE RESISTANCE WELD STRENGTH IDENTIFIED IN THE QUALITY CONTROL PROGRAM, ie., R5.
CHORD PLATE DETAILS SHOWN ON SHEET ST282 (1)

REF. DWG.
7-AB2-1 4-1-68
7-AB2-5
7-AB4-15.1 1-3-68
7-AB4-19, 28 & 41
7-AB4-38 4-1-68
7-AB4-16 & 18 5-6-68 (1)

PAINT
LACLEDE ELECTROCOAT
RED NO 10001

TRUSS DESIGNATION	TOP CHORD TWO ANGLES				BOTTOM CHORD TWO ANGLES				MAIN WEB "W"					VERTICAL "EST" STRUT					TRUSS DATA		FILLER		CHORD PLATE			
	MK	TYPE STEEL	CHORD SIZE	LENGTH	MK	TYPE STEEL	CHORD SIZE	LENGTH	MK	TYPE STEEL	DIA	LENGTH	NO OF K	MK	TYPE STEEL	DIA	LENGTH	NUMBER REQUIRED			NO.	DIA.	MK.	TYPE STEEL	SIZE	LENGTH
24T10B-1911	6	A242	2"x 1 1/2"x .31"	19'-11"	7	A36	3"x 2"x .33"	19'-11"	3	A242	1.14	25'-7 1/2" (2)	5K @ 3'-4" = 6'-8"	12	A242	1.14	1'-10 7/8"	2			—	—	CP12	A36	6 1/2"x 1/2"	19'-0"

ES END	TRUSS DESIGNATION	WE	INCLINED "ST" STRUT				WEB "Wc"				
			MK	TYPE STEEL	DIA	LENGTH	MK	TYPE STEEL	PCS	DIA	LENGTH
	24T10B-1911	1'-6 1/4"	2	A242	1.14	1'-11 3/4"	4	A242	1	1.14	2'-5 1/2"

EL END	TRUSS DESIGNATION	BEARING ANGLES				WEv	DIAGONAL "T" STRUT				INCLINED "STv" STRUT (1)				END STIFFENER								WEB "Wcv" (1)				
		MK	TYPE STEEL	SIZE	LENGTH		MK	TYPE STEEL	DIA	LENGTH	MK	TYPE STEEL	DIA	LENGTH	MK V5 TYPE STEEL	DIA	LENGTH		MK V6 TYPE STEEL	DIA	LENGTH		MK	TYPE STEEL	PCS	DIA	LENGTH
	24T10B-1911	—	—		—	6 1/4"	—	—	—	—	2	A242	1.14	1'-11 3/4"	—	—	—			—	—		4	A242	1	1.14	2'-5 1/2"

NO.	DATE	REVISION	BY
(3)	7-8-68	AS NOTED	T.M.C.
(2)	7-3-68	MAIN WEB	T.M.C.
(1)	6-26-68	AS NOTED	T.M.C.

BRIDGING TRUSS DETAILS
FOR
WORLD TRADE CENTER - N.Y.C.
FOR
THE PORT OF NEW YORK AUTHORITY

BRIDGING TRUSS 24T10B x 19'-11" LONG
WORLD TRADE CENTER TOWERS A B

FABRICATED BY LACLEDE STEEL COMPANY
FABRICATED AT MADISON, ILLINOIS
DESIGN DRAWING NO. 7-AB2-5
APPROVED FOR FABRICATION BY JW FOR P.N.Y.A. DATE 7/9/68
DRAWN BY DATE MAY 24, 1968
APPROVED FOR FABRICATION FOR FABRICATOR DATE
CHECKED BY T.M.CHURA DATE MAY 24, 1968
DETAILED BY WEBER
WT. 22
SHEET ST210B

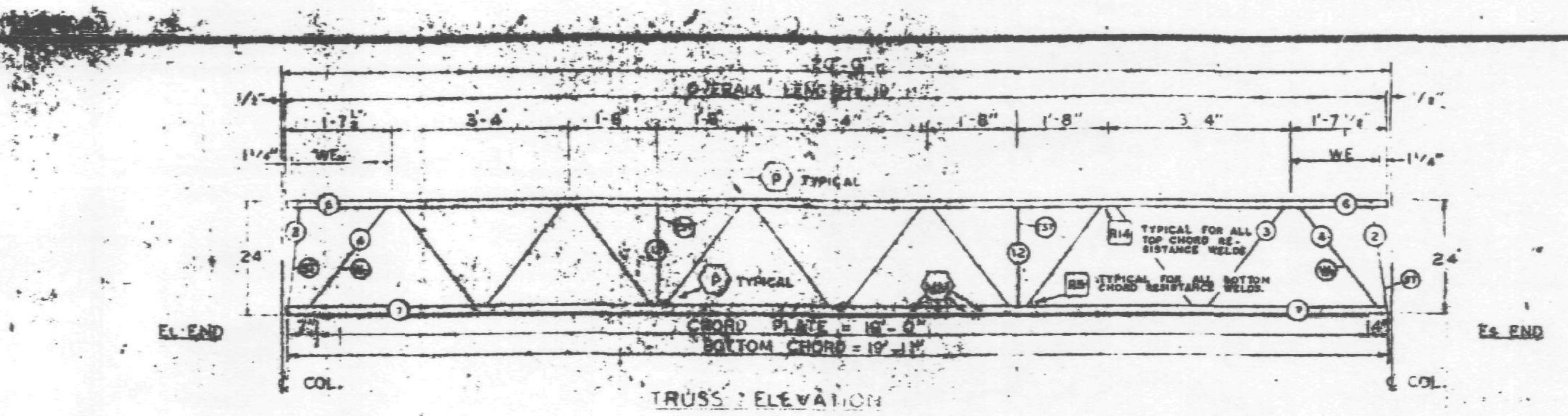

TRUSS ELEVATION

FABRICATION REQUIRMENTS		
	DESIGN	TOLERANCE
CAMBER AT MIDSPAN	0"	[illegible]
DESIGN DEPTH	24"	± 1/8
PANEL "K"	3'-4"	± 1/8"
PANEL "K₁"	3'-2 1/16"	± 1/8"
WEB DEPTH	23 1/8"	± 1/8
OVERALL LENGTH	19'-11"	± 1/8"

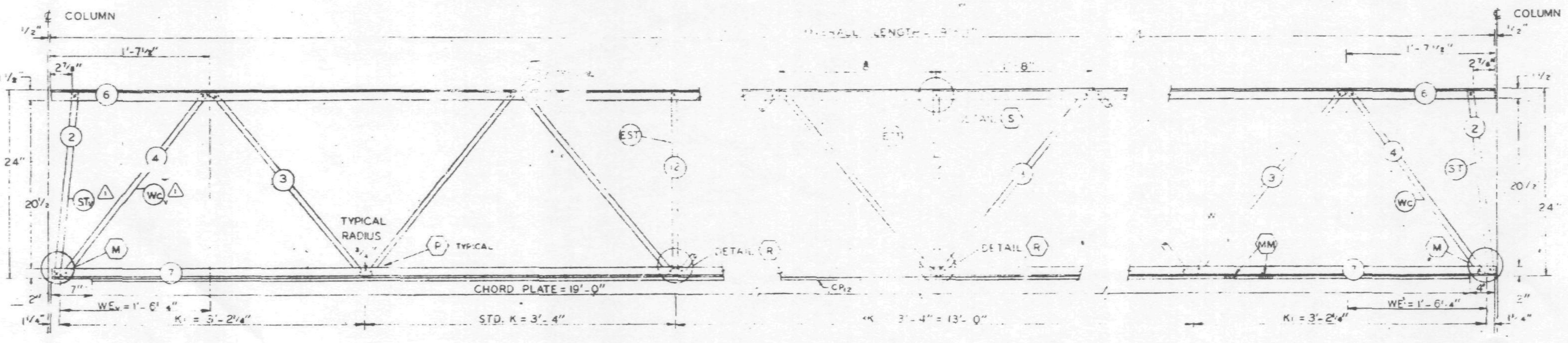

ELEVATION AT E₁ END

ELEVATION AT ADDED STRUT

ELEVATION AT E₂ END

ALL PANEL POINTS RESISTANCE WELDED (X)
ARC WELDS INDICATED AT SHADED AREAS
AND AT BOTTOM CHORD WEB SPLICES
ALL WELD DETAILS SHOWN ON SHEETS ST290, ST282 △1
AND ST291.
LETTERS IN HEXAGON INDICATE WELD DETAIL.
LETTERS AND NUMBERS IN SQUARES INDICATE RE-SISTANCE WELD STRENGTH IDENTIFIED IN THE QUALITY CONTROL PROGRAM, i.e., R5.
CHORD PLATE DETAILS SHOWN ON SHEET ST282 △1

TRUSS DESIGNATION	TOP CHORD TWO ANGLES	BOTTOM CHORD TWO ANGLES	MAIN WEB	[illegible]	FILLER	CHORD PLATE
[illegible]	[illegible]	[illegible]	[illegible]	[illegible]	[illegible]	[illegible]

REF. DWG. [illegible]
7 A84-16 & 18 — 5-6-68 △1

BRIDGING TRUSS DETAIL
FOR
WORLD TRADE CENTER
FOR
THE PORT OF NEW YORK AUTHORITY

[illegible] 4108

JW 7/5/68

△1 6-26-68 AS NOTED

T.M.C.

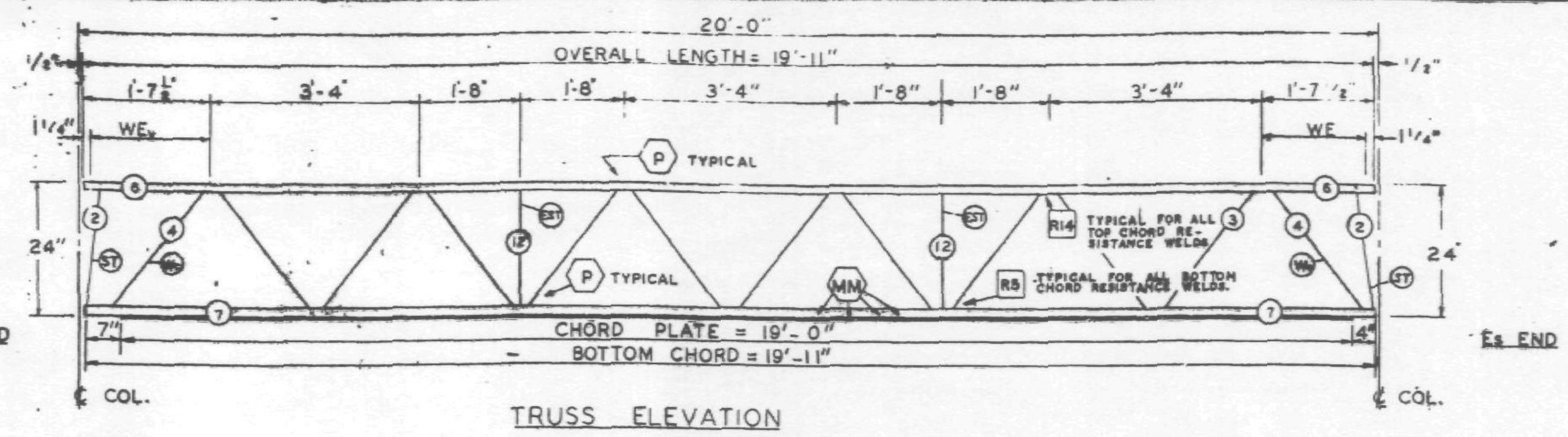

TRUSS ELEVATION

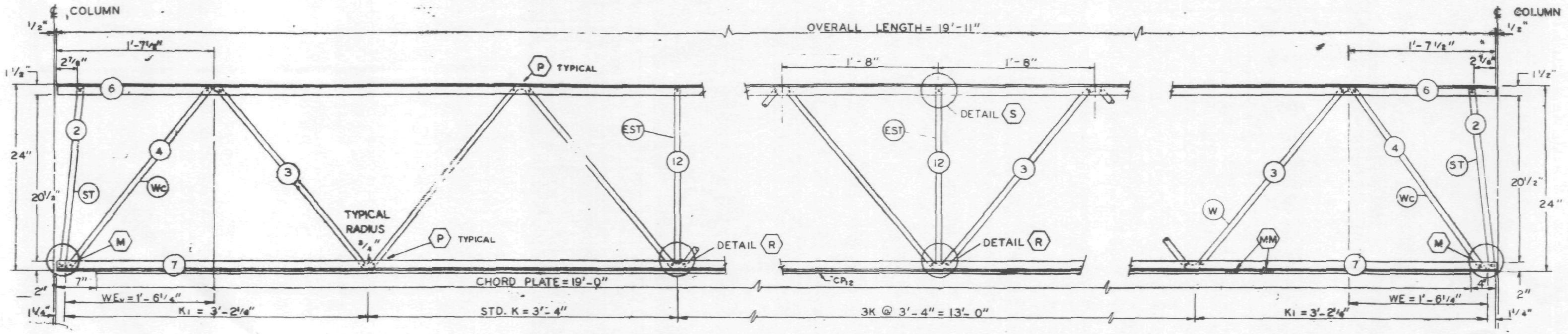

ELEVATION AT EL END

ELEVATION AT ADDED STRUT

ELEVATION AT ES END

FABRICATION REQUIRMENTS	DESIGN	TOLERANCE
CAMBER AT MIDSPAN	0"	± 1/8"
DESIGN DEPTH	24"	± 1/4"
PANEL "K"	3'-4"	± 1/4"
PANEL "K1"	3'-2 1/4"	± 1/4"
WEB DEPTH	23 1/2"	± 1/4"
OVERALL LENGTH	19'-11"	± 3/8"

ALL PANEL POINTS RESISTANCE WELDED (x)
ARC WELDS INDICATED AT SHADED AREAS
AND AT BOTTOM CHORD WEB SPLICES
ALL WELD DETAILS SHOWN ON SHEETS ST290, ST281, AND ST291.
LETTERS IN HEXAGON INDICATE WELD DETAIL, ie.
LETTERS AND NUMBERS IN SQUARES INDICATE RESISTANCE WELD STRENGTH IDENTIFIED IN THE QUALITY CONTROL PROGRAM, ie. R5.
CHORD PLATE DETAILS SHOWN ON SHEET ST281.

REF. DWG.

7-AB2-1	4-1-68
7-AB2-5	4-5-68
7-AB4-15.1	1-3-68
7-AB4-19, 28 & 41	1-3-68
7-AB4-38	4-1-68
7-AB4-16 & 18	5-17-68

PAINT
LACLEDE ELECTROCOAT
RED NO 10001

TRUSS DESIGNATION	TOP CHORD TWO ANGLES				BOTTOM CHORD TWO ANGLES				MAIN WEB "W"					VERTICAL "EST" STRUT					TRUSS DATA		FILLER		CHORD PLATE			
	MK	TYPE STEEL	CHORD SIZE	LENGTH	MK	TYPE STEEL	CHORD SIZE	LENGTH	MK	TYPE STEEL	DIA	LENGTH	NO OF K	MK	TYPE STEEL	DIA	LENGTH	NUMBER REQUIRED			NO.	DIA.	MK	TYPE STEEL	SIZE	LENGTH
24T108-1911	6	A242	2" x 1 1/2" x .31"	19'-11"	7	A36	3" x 2" x .33"	19'-11"	3	A242	1.14	30-6 1/2"	5K @ 3'-4" = 16'-8"	12	A242	1.14	1'-10 7/8"	2			—	—	CPL	A36	6 1/2" x 1/2"	19'-0"

ES	TRUSS DESIGNATION	WE	INCLINED "ST" STRUT				WEB "Wc"				
			MK	TYPE STEEL	DIA	LENGTH	MK	TYPE STEEL	PCS	DIA	LENGTH
	24T108-1911	1'-6 1/4"	2	A242	1.14	1'-11 3/4"	4	A242	1	1.14	2'-5 1/2"

EL END	TRUSS DESIGNATION	BEARING ANGLES				WEv	DIAGONAL "T" STRUT				INCLINED "ST" STRUT				END STIFFENER						WEB "Wc"				
															MK V5			MK V6							
		MK	TYPE STEEL	CHORD SIZE	LENGTH		MK	TYPE STEEL	DIA	LENGTH	MK	TYPE STEEL	DIA	LENGTH	TYPE STEEL	DIA	LENGTH	TYPE STEEL	DIA	LENGTH	MK	TYPE STEEL	PCS	DIA	LENGTH
	24T108-1911	—	—	—	—	1'-6 1/4"	—	—	—	—	2	A242	1.14	1'-11 3/4"	—	—	—	—	—	—	4	A242	1	1.14	2'-5 1/2"

NO.	DATE	REVISION	BY

BRIDGING TRUSS DETAILS
FOR
WORLD TRADE CENTER - N.Y.C.
FOR
THE PORT OF NEW YORK AUTHORITY

BRIDGING TRUSS 24T108 x 19'-11" LONG
WORLD TRADE CENTER TOWERS · A-B

FABRICATION BY LACLEDE STEEL COMPANY
FABRICATED AT MADISON, ILLINOIS
DESIGN DRAWING NO. 7-AB4-37 PLATE
APPROVED FOR FABRICATION BY James White FOR P.O.N.Y.A DATE 6/6/68
DRAWN BY [illegible] DATE MAY 24, 1968
APPROVED FOR FABRICATION BY FOR FABRICATOR DATE
CHECKED BY T.M. CHURA DATE MAY 24, 1968
IN CHARGE PROD. DEV.
LACLEDE STEEL CO.
DETAILED BY A.C. WEBER
FABRICATION CONT. NO. W.T.C. 221
SHEET NO ST2108

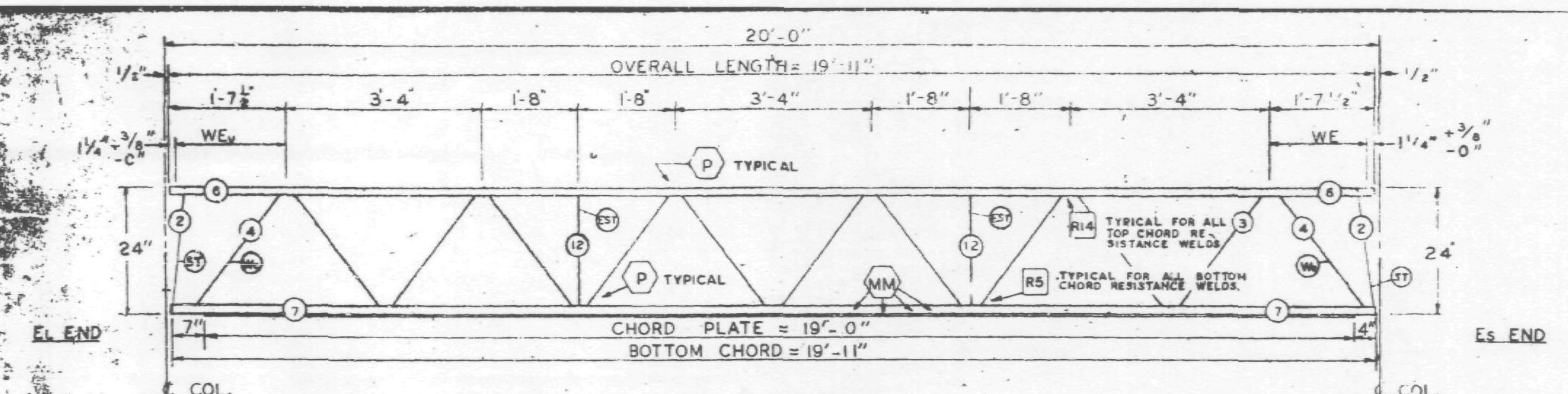

TRUSS ELEVATION

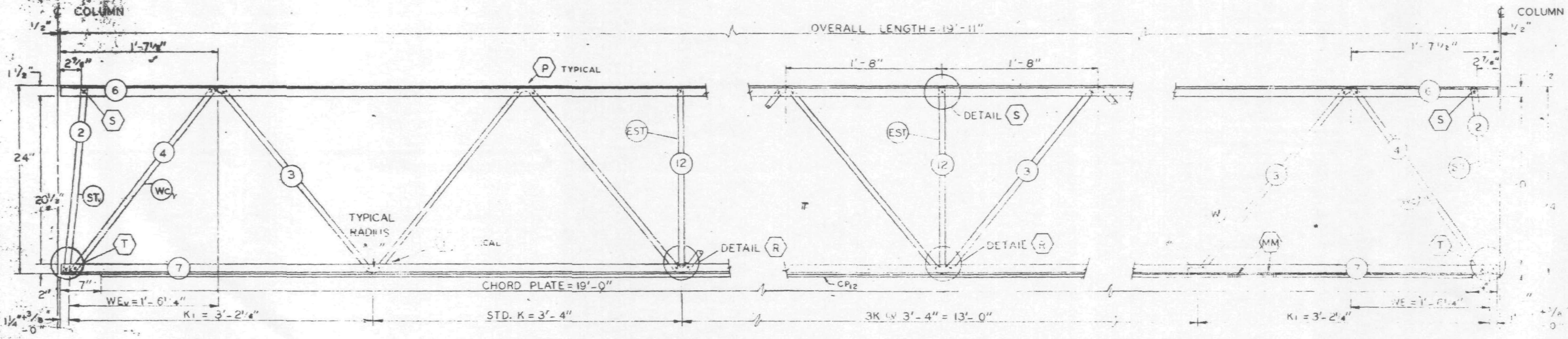

ELEVATION AT EL END

ELEVATION AT ADDED STRUT

ELEVATION AT Es END

FABRICATION REQUIRMENTS	DESIGN	TOLERANCE
CAMBER AT MIDSPAN	0"	± ⅛"
DESIGN DEPTH	24"	± ¼"
PANEL "K"	3'-4"	± ¼"
PANEL "K1"	3'-2¼"	± ¼"
WEB DEPTH	23⅞"	± ¼"
OVERALL LENGTH	19'-11"	± ⅜"

ALL PANEL POINTS RESISTANCE WELDED (x)
ARC WELDS INDICATED AT SHADED AREAS
AND AT BOTTOM CHORD WEB SPLICES (###)
ALL WELD DETAILS SHOWN ON SHEETS ST290, ST287
AND ST291
LETTERS IN HEXAGON INDICATE WELD DETAIL, ie., (A)
LETTERS AND NUMBERS IN SQUARES INDICATE RESISTANCE WELD STRENGTH IDENTIFIED IN THE QUALITY CONTROL PROGRAM, ie., [R5].
CHORD PLATE DETAILS SHOWN ON SHEET ST282

TRUSS DESIGNATION	TOP CHORD TWO ANGLES				BOTTOM CHORD TWO ANGLES				MAIN WEB "W"					VERTICAL "EST" STRUT					TRUSS DATA		FILLER		CHORD PLATE			
	MK.	TYPE STEEL	CHORD SIZE	LENGTH	MK.	TYPE STEEL	CHORD SIZE	LENGTH	MK.	TYPE STEEL	DIA	LENGTH	NO OF K	MK	TYPE STEEL	DIA	LENGTH	NUMBER REQUIRED	–		NO.	DIA.	MK.	TYPE STEEL	SIZE	LENGTH
24T10J-1911	6	A242	2"x1½"x.31"	19'-11"	7	A36	3"x2"x.33"	19'-11"	3	A242	1.14	25'-7½"	5K @ 3'-4" = 16'-8"	12	A242	1.14	1'-10⅞"	2			—	—	CP12	A36	6½"x½"	19'-0"

Es END	TRUSS DESIGNATION	WE	INCLINED "ST" STRUT				WEB "Wc"				
			MK.	TYPE STEEL	DIA	LENGTH	MK	TYPE STEEL	PCS	DIA	LENGTH
	24T10J-1911	1'-6¼"	2	A242	1.14	1'-11¾"	4	A242	1	1.14	2'-5½"

EL END	TRUSS DESIGNATION	BEARING ANGLES				WEv	DIAGONAL "T" STRUT				INCLINED "STv" STRUT				END STIFFENER MK V5			END STIFFENER MK V6			WEB "Wcv"				
		MK.	TYPE STEEL	CHORD SIZE	LENGTH		MK.	TYPE STEEL	DIA.	LENGTH	MK	TYPE STEEL	DIA	LENGTH	TYPE STEEL	DIA	LENGTH	TYPE STEEL	DIA.	LENGTH	MK	TYPE STEEL	PCS	DIA	LENGTH
	24T10J-1911	–	—	——	——	1'-6¼"	–	—	–	——	2	A242	1.14	1'-11¾"	—	—	——	—	—	——	4	A242	1	1.14	2'-5½"

PAINT
LACLEDE ELECTROCOAT
RED NO 10001

REF. DWG.	
7-AB2-1	1-5
7-AB2-20	1-6
7-AB4-15.1	10-4
7-AB4-19	12-20
7-AB4-38	10-15
7-AB4-16,28,41	7-22
7-AB4-18	1-6

NO.	DATE	REVISION	BY

BRIDGING TRUSS DETAILS
FOR
WORLD TRADE CENTER - N.Y.C.
FOR
THE PORT OF NEW YORK AUTHORITY

BRIDGING TRUSS 24T10J x 19'-11" LONG
WORLD TRADE CENTER TOWERS · A-B

FABRICATION BY LACLEDE STEEL COMPANY
FABRICATED AT MADISON, ILLINOIS
DESIGN DRAWING NO. 7-AB2-20 PLATE
APPROVED FOR FABRICATION BY James White FOR P.O.N.Y.A DATE 2/10/69
DRAWN BY: [illegible] DATE 1-24-69
APPROVED FOR FABRICATION BY FOR FABRICATOR DATE
CHECKED BY T.M. CHURA DATE 1-24-69
IN CHARGE PROD. DEV.
DETAILED BY A.C. WEBER
FABRICATION CONT NO. W.T.C. 221
SHEET BT210

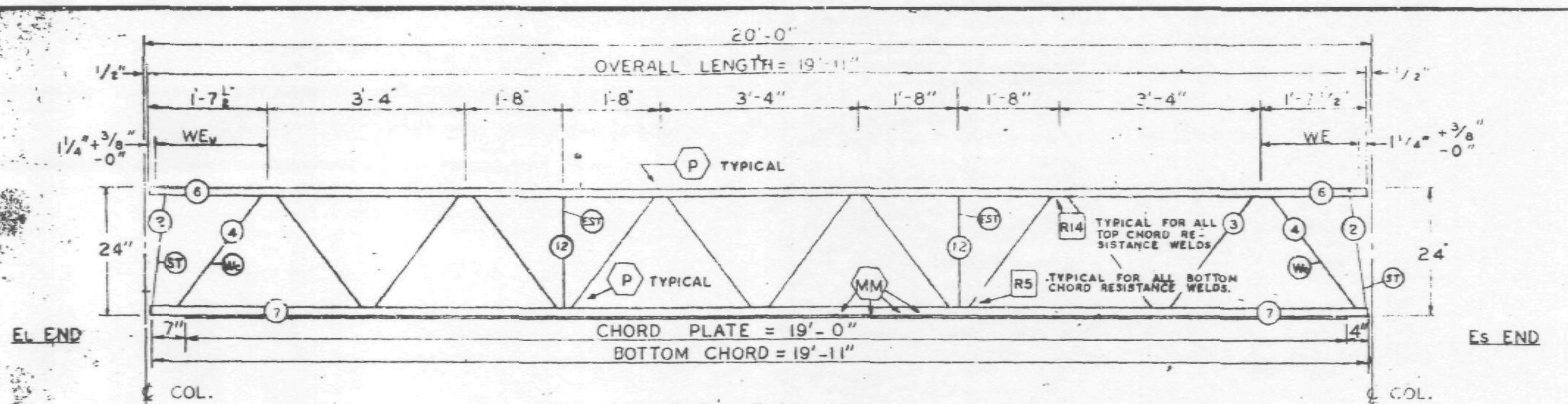

TRUSS ELEVATION

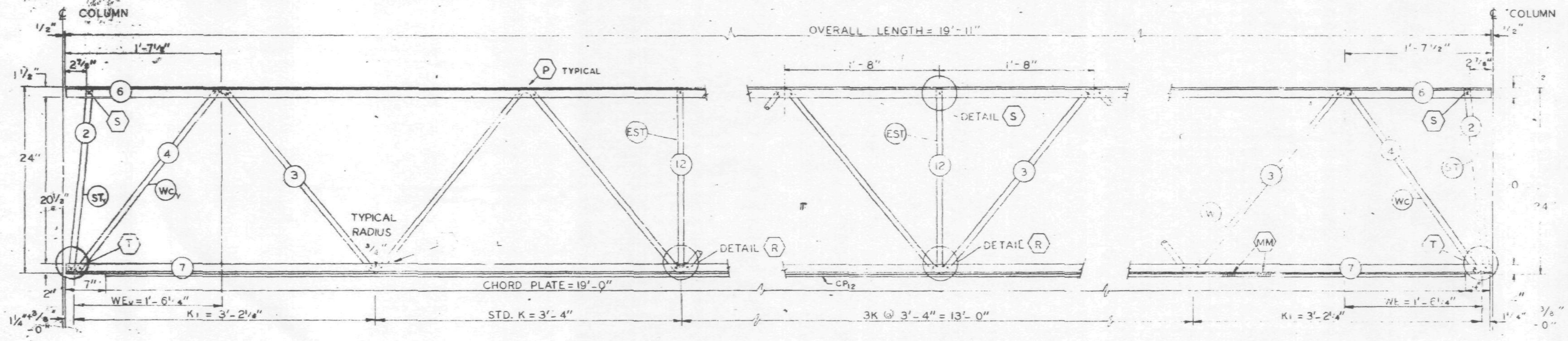

ELEVATION AT EL END

ELEVATION AT ADDED STRUT

ELEVATION AT ES END

FABRICATION REQUIRMENTS	DESIGN	TOLERANCE
CAMBER AT MIDSPAN	"	[illegible]
DESIGN DEPTH	24"	[illegible]
PANEL "K"	3'-4"	± 1/8"
PANEL "K1"	3'-2¼"	± 1/8"
WEB DEPTH	23⅞"	± 1/4"
OVERALL LENGTH	19'-11"	[illegible]

ALL PANEL POINTS RESISTANCE WELDED (X).
ARC WELDS INDICATED AT SHADED AREAS
AND AT BOTTOM CHORD WEB SPLICES (MM)
ALL WELD DETAILS SHOWN ON SHEETS ST290, ST282 AND ST291.
LETTERS IN HEXAGON INDICATE WELD DETAIL, ie., ⟨A⟩.
LETTERS AND NUMBERS IN SQUARES INDICATE RESISTANCE WELD STRENGTH IDENTIFIED IN THE QUALITY CONTROL PROGRAM, ie., [R5].
CHORD PLATE DETAILS SHOWN ON SHEET ST282

REF. DWG.	
7-AB2-1	1-6-69
7-AB2-20	1-6-69
7-AB4-15.1	10-4-68
7-AB4-19	12-20-68
7-AB4-38	10-15-68
7-AB4-16,28,41	7-22-68
7-AB4-18	1-6-69

PAINT
LACLEDE ELECTROCOAT
REC. NO. 10001

TRUSS DESIGNATION	TOP CHORD TWO ANGLES				BOTTOM CHORD TWO ANGLES				MAIN WEB "W"					VERTICAL "EST" STRUT					TRUSS DATA		FILLER		CHORD PLATE			
	MK.	TYPE STEEL	CHORD SIZE	LENGTH	MK	TYPE STEEL	CHORD SIZE	LENGTH	MK	TYPE STEEL	DIA	LENGTH	NO OF K	MK	TYPE STEEL	DIA	LENGTH	NUMBER REQUIRED	–		NO.	DIA.	MK.	TYPE STEEL	SIZE	LENGTH
24T10K-1911	6	A242	2"x 1½"x .31"	19'-11"	7	A36	3"x 2"x .33"	19'-11"	3	A242	1.14	25'-7½"	5K @ 3'-4" = 16'-8"	12	A242	1.14	1'-10⅞"	2			—	—	CP_{12}	A36	6½"x ½"	19'-0"

ES END TRUSS DESIGNATION	WE	INCLINED "ST" STRUT				WEB "WC"				
		MK.	TYPE STEEL	DIA	LENGTH	MK	TYPE STEEL	PCS	DIA	LENGTH
24T10K-1911	1'-6¼"	2	A242	1.14	1'-11¾"	4	A242	1	1.14	2'-5½"

EL END TRUSS DESIGNATION	BEARING ANGLES				WE_V	DIAGONAL "T" STRUT				INCLINED "ST_V" STRUT				END STIFFENER MK V5			END STIFFENER MK V6			WEB "WC_V"				
	MK	TYPE STEEL	CHORD SIZE	LENGTH		MK.	TYPE STEEL	DIA	LENGTH	MK.	TYPE STEEL	DIA	LENGTH	TYPE STEEL	DIA.	LENGTH	TYPE STEEL	DIA	LENGTH	MK	TYPE STEEL	PCS	DIA	LENGTH
24T10K-1911	—	—	——	——	1'-6¼"	—	—	—	—	2	A242	1.14	1'-11¾"	—	—	——	——	—	——	4	A242	1	1.14	2'-5½"

NO.	DATE	REVISION	BY

BRIDGING TRUSS DETAILS
FOR
WORLD TRADE CENTER - N.Y.C.
FOR
THE PORT OF NEW YORK AUTHORITY

BRIDGING TRUSS 24T10K x 19'-11" LONG
WORLD TRADE CENTER TOWERS - A-B

FABRICATION BY LACLEDE STEEL COMPANY

FABRICATED AT MADISON, ILLINOIS		DESIGN DRAWING NO. 7-AB2-20	PLATE
APPROVED FOR FABRICATION BY James White FOR P.O.N.Y.A	DATE 2/10/69	DRAWN BY: DATE 1-24-69	
APPROVED FOR FABRICATION BY FOR FABRICATOR	DATE	CHECKED BY: T.M. CHURA DATE 1-24-69	IN CHARGE OF PROD. DEV.
DETAILED BY A.C. WEBER		FABRICATION CONT. NO W.T.C. 221	SHEET NO. BT210K

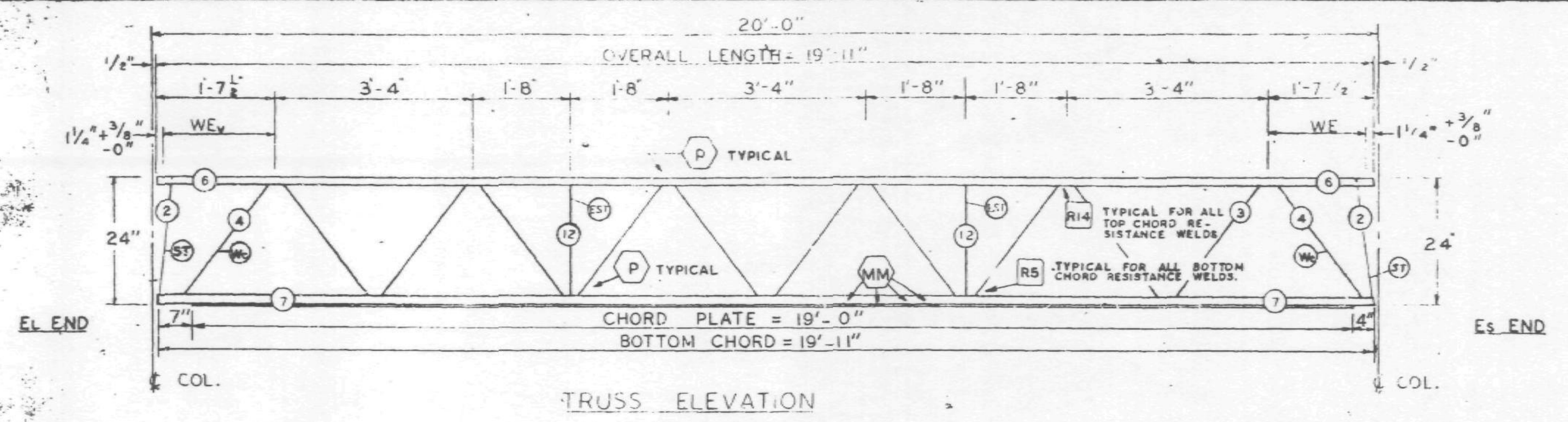

TRUSS ELEVATION

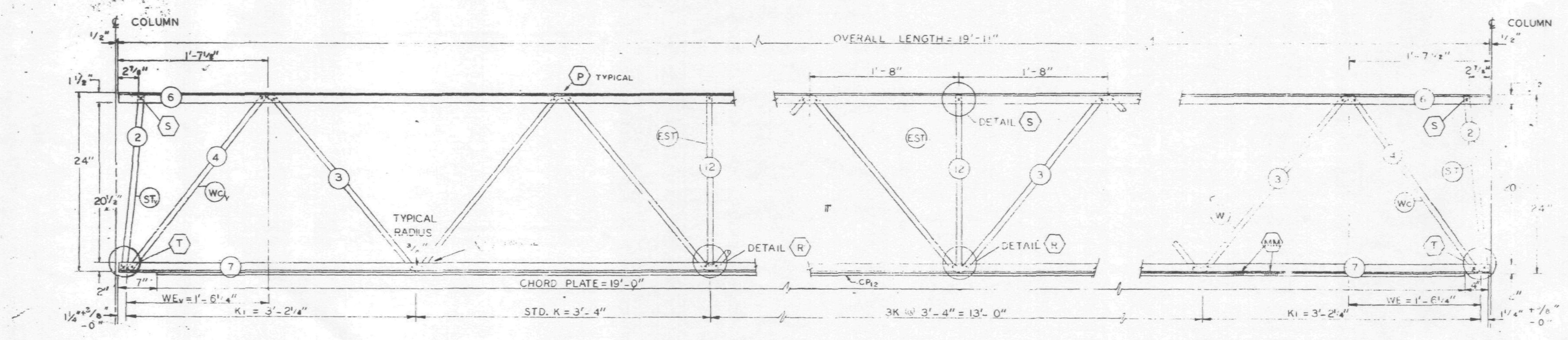

ELEVATION AT EL END

ELEVATION AT ADDED STRUT

ELEVATION AT Es END

FABRICATION REQUIRMENTS	DESIGN	TOLERANCE
CAMBER AT MIDSPAN	C	+ 3/8"
DESIGN DEPTH	24"	± 1/4"
PANEL "K"	3'-4"	± 1/4"
PANEL "K1"	3'-2 1/4"	± 1/4"
WEB DEPTH	23 1/2"	± 1/4"
OVERALL LENGTH	19'-11"	± 1/8"

ALL PANEL POINTS RESISTANCE WELDED (X).
ARC WELDS INDICATED AT SHADED AREAS
AND AT BOTTOM CHORD WEB SPLICES
ALL WELD DETAILS SHOWN ON SHEETS ST290, ST282 AND ST291.
LETTERS IN HEXAGON INDICATE WELD DETAIL, ie. (A)
LETTERS AND NUMBERS IN SQUARES INDICATE RESISTANCE WELD STRENGTH IDENTIFIED IN THE QUALITY CONTROL PROGRAM, ie., [R5].
CHORD PLATE DETAILS SHOWN ON SHEET ST282

REF. DWG.

7-AB2-1	1-6-69
7-AB2-20	1-6-69
7-AB4-15.1	10-4-68
7-AB4-19	12-20-68
7-AB4-38	10-15-68
7-AB4-16,28,41	7-22-68
7-AB4-18	1-6-69

PAINT
L'ACLEDE ELECTROCOAT
RED NO 10001

TRUSS DESIGNATION	TOP CHORD TWO ANGLES				BOTTOM CHORD TWO ANGLES				MAIN WEB "W"					VERTICAL "EST" STRUT					TRUSS DATA		FILLER		CHORD PLATE			
	MK.	TYPE STEEL	CHORD SIZE	LENGTH	MK	TYPE STEEL	CHORD SIZE	LENGTH	MK	TYPE STEEL	DIA	LENGTH	NO OF K	MK	TYPE STEEL	DIA	LENGTH	NUMBER REQUIRED			NO.	DIA.	MK.	TYPE STEEL	SIZE	LENGTH
24T10L-1911	6	A242	2"x 1 1/2" x .31"	19'-11"	7	A36	3"x 2" x .33"	19'-11"	3	A242	1.14	25'-7 1/2"	5K @ 3'-4" = 16'-8"	12	A242	1.14	1'-10 7/8"	2			—	—	CP2	A36	6 1/2" x 1/2"	19'-0"

Es END	TRUSS DESIGNATION	WE	INCLINED "ST" STRUT				WEB "Wc"				
			MK	TYPE STEEL	DIA	LENGTH	MK	TYPE STEEL	PCS	DIA	LENGTH
	24T10L-1911	1'-6 1/4"	2	A242	1.14	1'-11 3/4"	4	A242	1	1.14	2'-5 1/2"

EL END	TRUSS DESIGNATION	BEARING ANGLES				WE_v	DIAGONAL "T" STRUT				INCLINED "ST_v" STRUT				END STIFFENER MK V5			END STIFFENER MK V6			WEB "Wc_v"				
		MK	TYPE STEEL	CHORD SIZE	LENGTH		MK	TYPE STEEL	DIA	LENGTH	MK	TYPE STEEL	DIA	LENGTH	TYPE STEEL	DIA.	LENGTH	TYPE STEEL	DIA.	LENGTH	MK	TYPE STEEL	PCS	DIA	LENGTH
	24T10L-1911	—	—	—	—	1'-6 1/4"	—	—	—	—	2	A242	1.14	1'-11 3/4"	—	—	—	—	—	—	4	A242	1	1.14	2'-5 1/2"

NO.	DATE	REVISION	BY

BRIDGING TRUSS DETAILS
FOR
WORLD TRADE CENTER – N.Y.C.
FOR
THE PORT OF NEW YORK AUTHORITY.

BRIDGING TRUSS 24T10L x 19'-11" LONG
WORLD TRADE CENTER TOWERS · A-B

FABRICATION BY. LACLEDE STEEL COMPANY
FABRICATED AT MADISON, ILLINOIS
DESIGN DRAWING NO. 7-AB2-20 PLATE
APPROVED FOR FABRICATION BY [signature] FOR PONYA DATE 2/10/69
DRAWN BY: [initials] DATE 1-24-69
APPROVED FOR FABRICATION BY ______ FOR FABRICATOR DATE
CHECKED BY T.M.CHURA DATE 1-24-69
IN CHARGE OF PROD. DEV.
DETAILED BY A.C. WEBER
FABRICATION CONT. NO. W.T.C. 221
SHEET NO BT210L

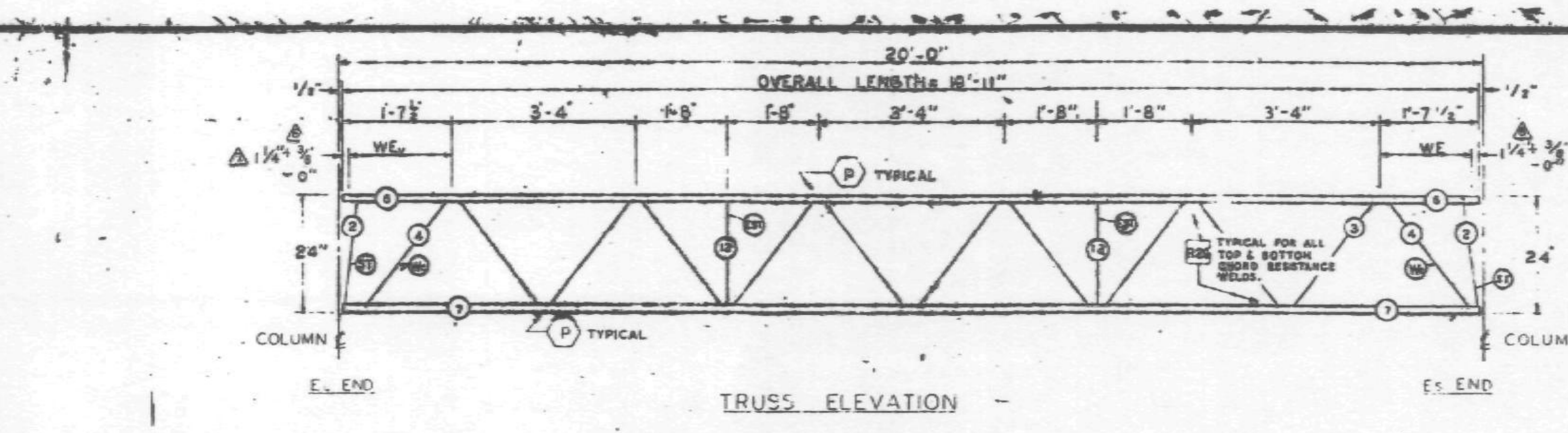

TRUSS ELEVATION

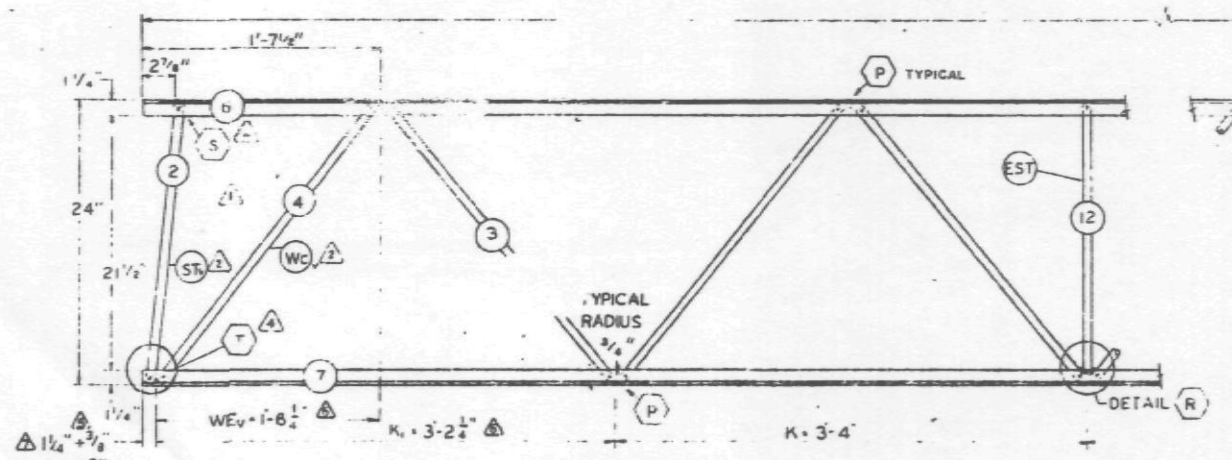

ELEVATION AT EL END

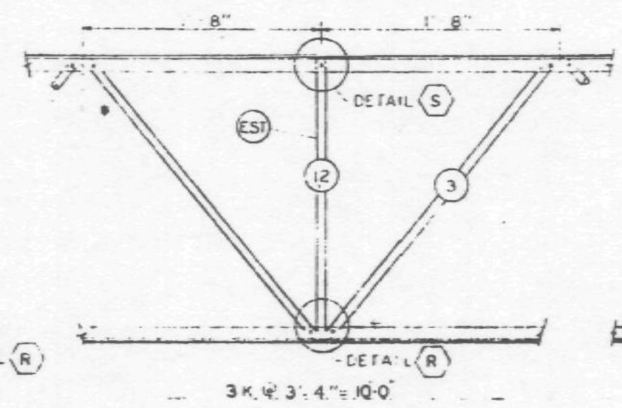

ELEVATION AT ADDED STRUT

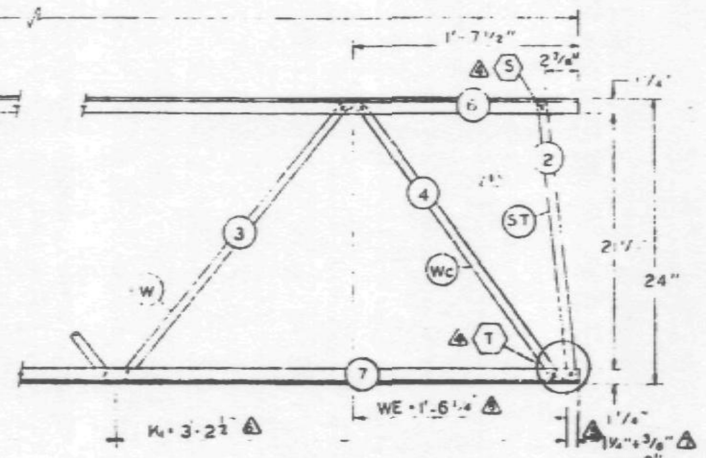

ELEVATION AT ES END

FABRICATION REQUIRMENTS	DESIGN	TOLERANCE
CAMBER AT MIDSPAN	0"	[illegible]
DESIGN DEPTH	24"	[illegible]
PANEL "K"	3'-4"	[illegible]
PANEL "K1"	3'-2½"	[illegible]
WEB DEPTH	23½"	[illegible]
OVERALL LENGTH	19'-11"	[illegible]

ALL PANEL POINTS RESISTANCE WELDED (X).
ARC WELDS INDICATED AT SHADED AREAS AND AT BOTTOM CHORD WEB SPLICES (▬).
ALL WELD DETAILS SHOWN ON SHEETS ST290 AND ST291.
LETTERS IN HEXAGON INDICATE WELD DETAIL, i.e., (A).
⚠1 LETTERS AND NUMBERS IN SQUARES INDICATE RESISTANCE WELD STRENGTH IDENTIFIED IN THE QUALITY CONTROL PROGRAM, i.e., R29.

⚠2 REF DWG.

7-AB2-1	4-1-68
7-AB2-6	2-15-68
7-AB4-15,1	1-2-68
7-AB4-16,18	5-6-68
7-AB4-28,19 & 41	1-3-68
7-AB4-38	4-1-68

PAINT
LACLEDE ELECTROCOAT
RED NO 10001

TRUSS DESIGNATION	TOP CHORD TWO ANGLES				BOTTOM CHORD TWO ANGLES				MAIN WEB "W"					VERTICAL "EST" STRUT					TRUSS DATA		FILLER	
	MK	TYPE STEEL	CHORD SIZE	LENGTH	MK	TYPE STEEL	CHORD SIZE	LENGTH	MK	TYPE STEEL	DIA	LENGTH	NO. OF K	MK	TYPE STEEL	DIA	LENGTH	NUMBER REQUIRED			NO.	DIA.
24TII-1911	6	A242	1½"x1¼"x.230	19'-11"	7	A242	1"x1¼"x.230	19'-11"	3	A242	.75	25'-7½" ⚠3	5K = 3'-4" = 16'-8"	12	A242	.75	1'-10⅞" ⚠2	2			—	—

ES END	TRUSS DESIGNATION	WE	INCLINED "ST" STRUT				WEB "WC"				
			MK	TYPE STEEL	DIA	LENGTH	MK	TYPE STEEL	PCS	DIA	LENGTH
	24TII-1911	1'-6¼" ⚠4	2	A242	.75	1'-11¾"	4	A242	1	.75	2'-5⅛"

EL END	TRUSS DESIGNATION	BEARING ANGLES				WEL	DIAGONAL "T" STRUT				INCLINED "ST" STRUT ⚠2				END STIFFENER MK V5			END STIFFENER MK V6			WEB "WC" ⚠2				
		MK	TYPE STEEL	CHORD SIZE	LENGTH		MK.	TYPE STEEL	DIA.	LENGTH	MK.	TYPE STEEL	DIA.	LENGTH	TYPE STEEL	DIA.	LENGTH	TYPE STEEL	DIA	LENGTH	MK	TYPE STEEL	PCS	DIA	LENGTH
	24TII-1911	—	—	—	—	1'-6¼" ⚠4	—	—	—	—	2	A242	.75	1'-11½"	—	—	—	—	—	—	4	A242	1	.75	2'-5⅛"

NO.	DATE	REVISION	BY
⚠7	8-29-68	END DIST. (2)	T.M.C.
⚠6	8-26-68	AS NOTED	T.M.C.
⚠5	7-27-68	END DIST. (2)	T.M.C.
⚠4	7-8-68	AS NOTED	T.M.C.
⚠3	7-3-68	MAIN WEB	T.M.C.
⚠2	6-26-68	AS NOTED	T.M.C.
⚠1	3-19-68	WEB	J.R.P.

BRIDGING TRUSS DETAILS
FOR
WORLD TRADE CENTER - N.Y.C.
FOR
THE PORT OF NEW YORK AUTHORITY

BRIDGING TRUSS 24TII 19'-11" LONG
WORLD TRADE CENTER TOWERS A-B

FABRICATION BY LACLEDE STEEL COMPANY
FABRICATED AT MADISON, ILLINOIS
DESIGN DRAWING NO. 7-AB2-6
PLATE
APPROVED FOR FABRICATION James White FOR P.O.N.Y.A. DATE 9/4/68
APPROVED FOR FABRICATION BY ____ FOR FABRICATOR DATE ____
DRAWN BY [illegible] DATE FEB 24, 1968
CHECKED BY J.R.PAUL DATE FEB 24, 1968
IN CHARGE OF PROD. DES.
DETAILED BY [illegible] LACLEDE STEEL CO.
FABRICATION CONT. NO. W.T.C. 221
SHEET NO. BT211

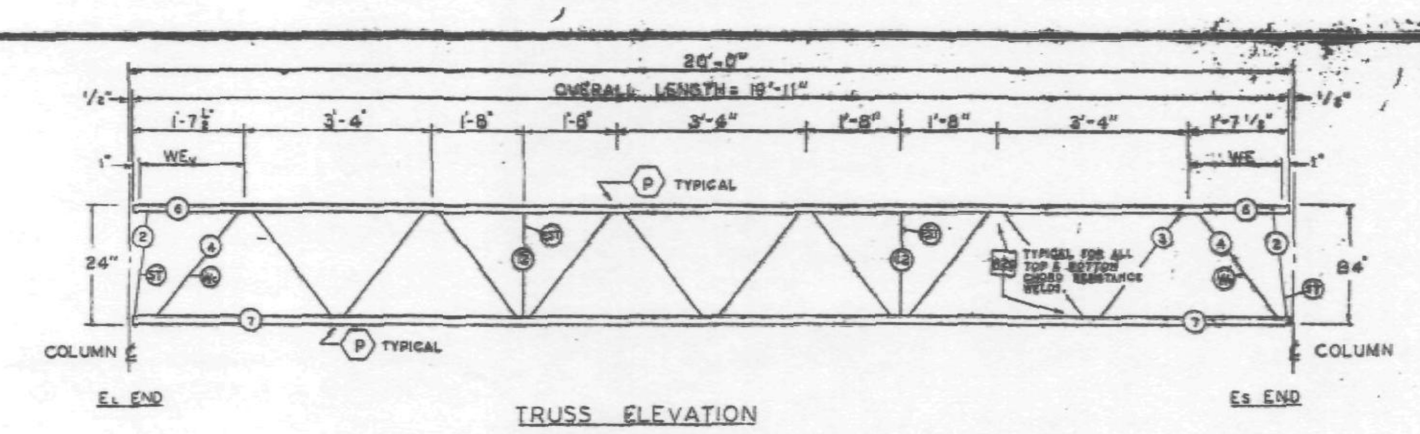

TRUSS ELEVATION

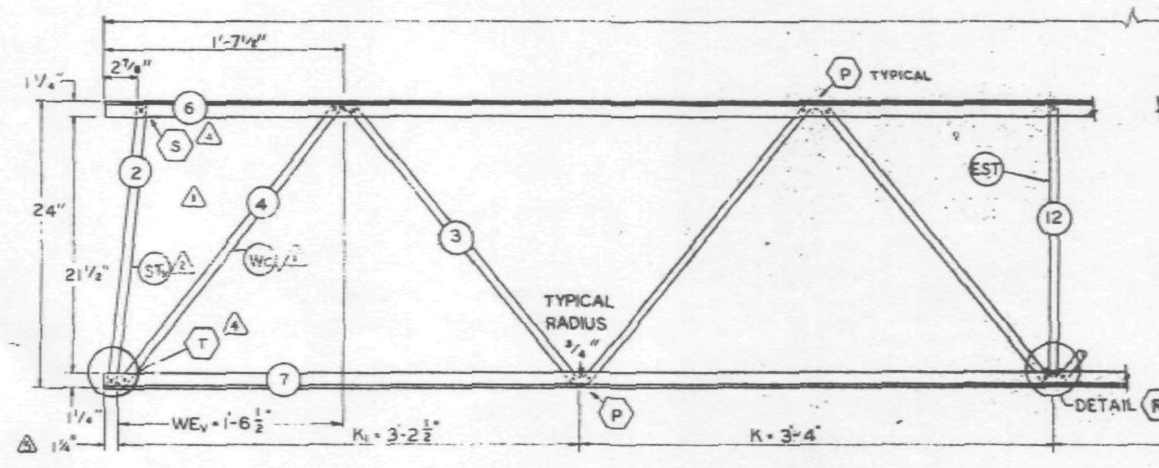

ELEVATION AT EL END

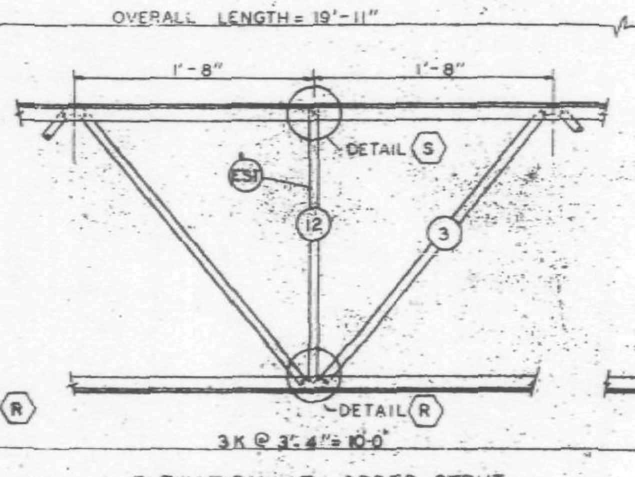

ELEVATION AT ADDED STRUT

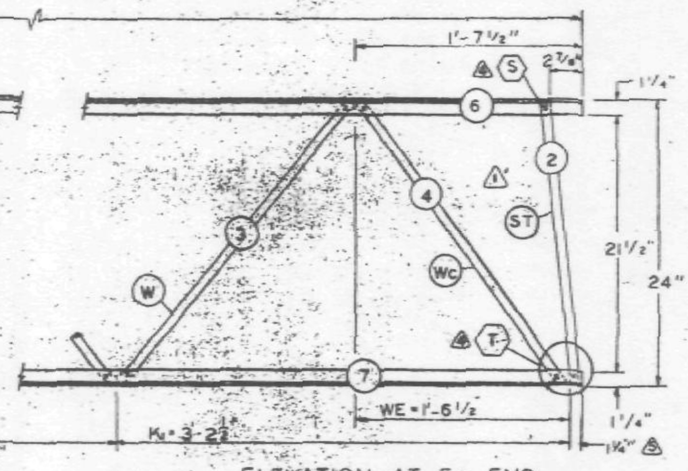

ELEVATION AT Es END

FABRICATION REQUIREMENTS	DESIGN	TOLERANCE
CAMBER AT MIDSPAN	0"	± 1/8"
DESIGN DEPTH	24"	± 1/4"
PANEL "K"	3'-4"	± 1/4"
PANEL "K1"	3'-2 1/2"	± 1/4"
WEB DEPTH	23 1/2"	± 1/4"
OVERALL LENGTH	19'-11"	± 1/8"

ALL PANEL POINTS RESISTANCE WELDED (x).
ARC WELDS INDICATED AT SHADED AREAS AND AT BOTTOM CHORD WEB SPLICES
ALL WELD DETAILS SHOWN ON SHEETS ST290 AND ST291.
LETTERS IN HEXAGON INDICATE WELD DETAIL, ie., (A).
△1 LETTERS AND NUMBERS IN SQUARES INDICATE RESISTANCE WELD STRENGTH IDENTIFIED IN THE QUALITY CONTROL PROGRAM, ie., R29.

△2 REF. DWG.

7-AB2-1	4-1-68
7-AB2-6	2-15-68
7-AB4-15.1	1-2-68
7-AB4-16.18	5-6-68
7-AB4-28, 19 & 41	1-3-68
7-AB4-38	4-1-68

PAINT
LACLEDE ELECTROCOAT
RED NO 10001

TRUSS DESIGNATION	TOP CHORD TWO ANGLES				BOTTOM CHORD TWO ANGLES				MAIN WEB "W"					VERTICAL "EST" STRUT					TRUSS DATA		FILLER	
	MK	TYPE STEEL	CHORD SIZE	LENGTH	MK	TYPE STEEL	CHORD SIZE	LENGTH	MK	TYPE STEEL	DIA	LENGTH	NO. OF K	MK	TYPE STEEL	DIA	LENGTH	NUMBER REQUIRED			NO.	DIA.
24T11-1911	6	A242	1 1/2" x 1 1/4" x 230	19'-11"	7	A242	1 1/2" x 1 1/4" x 230	19'-11"	3	A242	.75	25'-7 1/2" △2	5K @ 3'-4" = 16'-8"	12	A242	.75	1'-10 7/8" △2	2			—	—

Es END	TRUSS DESIGNATION	WE	INCLINED "ST" STRUT				WEB "Wc"				
			MK	TYPE STEEL	DIA	LENGTH	MK	TYPE STEEL	PCS	DIA	LENGTH
	24T11-1911	1'-6 1/2"	2	A242	.75	1'-11 3/4"	4	A242	1	.75	2'-5 1/2"

EL END	TRUSS DESIGNATION	BEARING ANGLES				WEV	DIAGONAL "T" STRUT				INCLINED "ST" STRUT △1				END STIFFENER MK V5			END STIFFENER MK V6			WEB "Wc" △2				
		MK	TYPE STEEL	CHORD SIZE	LENGTH		MK	TYPE STEEL	DIA	LENGTH	MK	TYPE STEEL	DIA	LENGTH	TYPE STEEL	DIA	LENGTH	TYPE STEEL	DIA	LENGTH	MK	TYPE STEEL	PCS	DIA	LENGTH
	24T11-1911	—	—	—	—	1'-6 1/2"	—	—	—	—	2	A242	.75	1'-11 1/2"	—	—	—	—	—	—	4	A242	1	.75	2'-5 1/2"

NO.	DATE	REVISION	BY
△	[illegible]	END DIST. (2)	T.M.C.
△	[illegible]	AS NOTED	T.M.C.
△	[illegible]	MAIN WEB	T.M.C.
△	[illegible]	AS NOTED	T.M.C.
△	[illegible]	WEB	J.R.P.

BRIDGING TRUSS DETAILS
FOR
WORLD TRADE CENTER - N.Y.C.
FOR
THE PORT OF NEW YORK AUTHORITY

BRIDGING TRUSS 24T11 x 19'-11" LONG
WORLD TRADE CENTER TOWERS A-B

FABRICATION BY LACLEDE STEEL COMPANY

FABRICATED AT MADISON, ILLINOIS		DESIGN DRAWING NO. 7-AB2-6	PLATE
APPROVED FOR FABRICATION BY [signature] FOR P.O.N.Y.A	DATE 8/2/68	DRAWN BY: [illegible] DATE FEB 24, 1968	
APPROVED FOR FABRICATION BY ___ FOR FABRICATOR	DATE	CHECKED BY: J.R. PAUL DATE FEB 24, 1968	IN CHARGE OF PROD. DEV.
DETAILED BY A.C. WEBER		FABRICATION CONT. NO. W.T.C. 221	SHEET NO. BT211

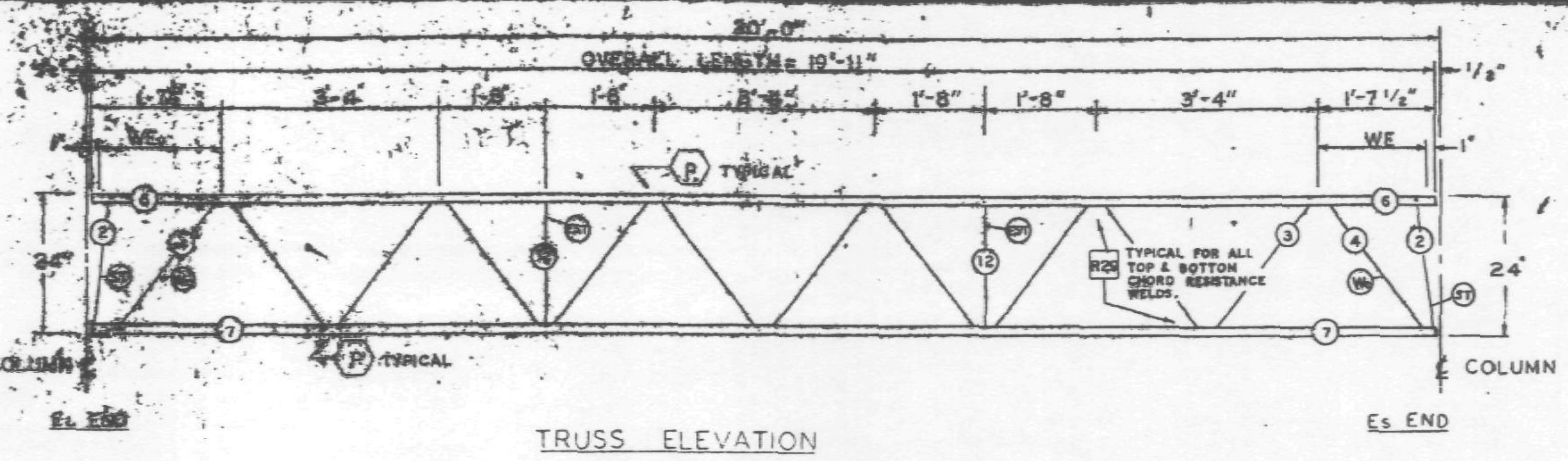

TRUSS ELEVATION

FABRICATION REQUIRMENTS	DESIGN	TOLERANCE
CAMBER AT MIDSPAN	[illegible]	± [illegible]
DESIGN DEPTH	24"	± [illegible]
PANEL "K"	3'-4"	± [illegible]
PANEL "K1"	3'-2 1/2"	± [illegible]
WEB DEPTH	23 [illegible]	± [illegible]
OVERALL LENGTH	19'-11"	± [illegible]

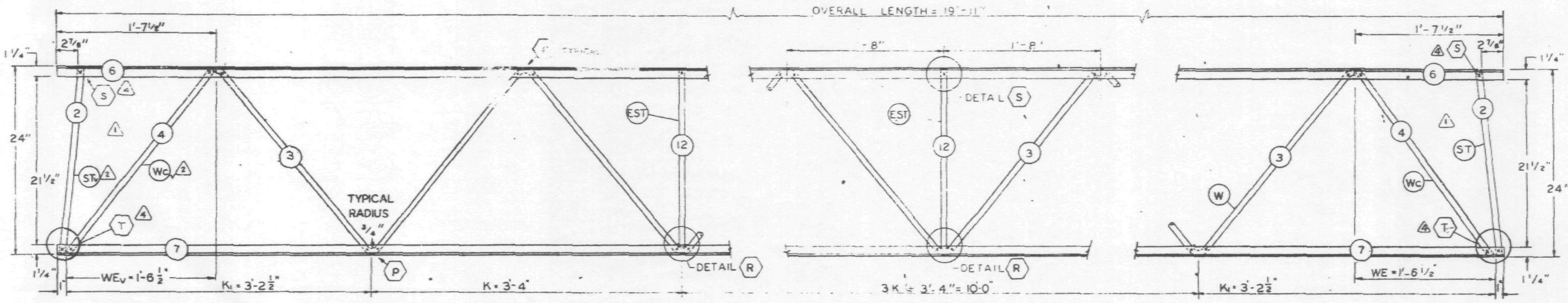

ELEVATION AT EL END

ELEVATION AT ADDED STRUT

ELEVATION AT Es END

ALL PANEL POINTS RESISTANCE WELDED (X).
ARC WELDS INDICATED AT SHADED AREAS AND AT BOTTOM CHORD WEB SPLICES
ALL WELD DETAILS SHOWN ON SHEETS ST290 AND ST291.
LETTERS IN HEXAGON INDICATE WELD DETAIL, ie., (A)
(1) LETTERS AND NUMBERS IN SQUARES INDICATE RESISTANCE WELD STRENGTH IDENTIFIED IN THE QUALITY CONTROL PROGRAM, ie., R29.

(2) REF. DWG.

7-AB2-1	4-1-68
7-AB2-6	2-15-68
7-AB4-15.1	1-3-68
7-AB4-18.18	5-6-68
7-AB4-28, 19 & 41	1-3-68
7-AB4-38	4-1-68

PAINT
LACLEDE ELECTROCOAT
RED NO 10001

TRUSS DESIGNATION	TOP CHORD TWO ANGLES				BOTTOM CHORD TWO ANGLES				MAIN-WEB "W"					VERTICAL "EST" STRUT					TRUSS DATA		FILLER	
	MK.	TYPE STEEL	CHORD SIZE	LENGTH	MK.	TYPE STEEL	CHORD SIZE	LENGTH	MK.	TYPE STEEL	DIA.	LENGTH	NO OF K	MK.	TYPE STEEL	DIA	LENGTH	NUMBER REQUIRED			NO.	DIA.
24[illegible]	6	A242	1 1/2" x 1 1/4" x .230"	19'-11"	7	A242	1 1/2" x 1 1/4" x .230"	19'-11"	3	A242	.75	25'-7 1/2" (3)	5K @ 3'-4" = 16'-8"	12	A242	.75	1'-10 7/8" (2)	2			—	—

Es END TRUSS DESIGNATION	WE	INCLINED "ST" STRUT				WEB "Wc"				
		MK.	TYPE STEEL	DIA	LENGTH	MK	TYPE STEEL	PCS	DIA	LENGTH
24T11 - 1911	1'-6 1/2"	2	A242	.75	1'-11 3/4"	4	A242	1	.75	2'-5 1/2"

EL END TRUSS DESIGNATION	BEARING ANGLES				WEv	DIAGONAL "T" STRUT				INCLINED "STv" STRUT (2)				END STIFFENER MK V5			END STIFFENER MK V6			WEB "Wcv" (2)				
	MK.	TYPE STEEL	CHORD SIZE	LENGTH		MK.	TYPE STEEL	DIA.	LENGTH	MK.	TYPE STEEL	DIA.	LENGTH	TYPE STEEL	DIA.	LENGTH	TYPE STEEL	DIA.	LENGTH	MK	TYPE STEEL	PCS	DIA	LENGTH
24T11 - 1911	—	—	—	—	1'-6 1/2"	—	—	—	—	2	A242	.75	1'-11 3/4"	—	—	—	—	—	—	4	A242	1	.75	2'-5 1/2"

NO.	DATE	REVISION	BY
(4)	7-8-68	AS NOTED	T.M.C.
(3)	7-3-68	MAIN WEB	T.M.C.
(2)	6-26-68	AS NOTED	T.M.C.
(1)	3-19-68	WEB	J.R.P.

BRIDGING TRUSS DETAILS
FOR
WORLD TRADE CENTER - N.Y.C.
FOR
THE PORT OF NEW YORK AUTHORITY

BRIDGING TRUSS 24T11 x 19'-11" LONG
WORLD TRADE CENTER TOWERS A-B

FABRICATION BY LACLEDE STEEL COMPANY

FABRICATED AT: MADISON, ILLINOIS
DESIGN DRAWING NO. 7-AB2-6 PLATE
APPROVED FOR FABRICATION BY: JW FOR P.O.N.Y.A. DATE 7/9/68
DRAWN BY: [illegible] DATE FEB 24, 1968
APPROVED FOR FABRICATION BY FOR FABRICATOR DATE
CHECKED BY: J.R. PAUL DATE FEB 24, 1968
IN CHARGE OF PROD. DEV.
DETAILED LACLEDE STEEL CO.
FABRICATION CONT. NO W.T.C. 221
SHEET NO. BT211

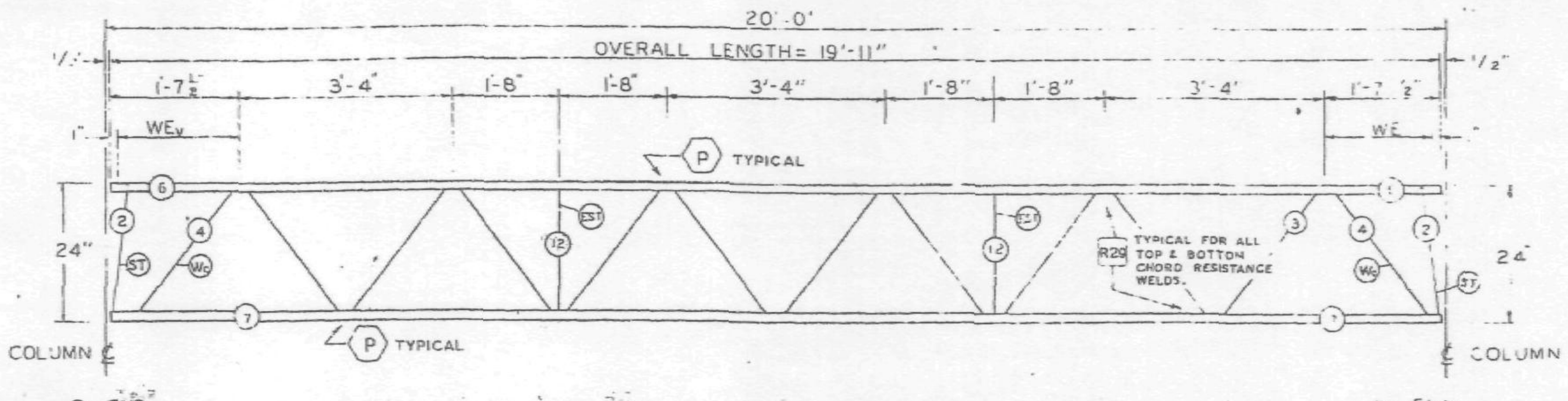

TRUSS ELEVATION

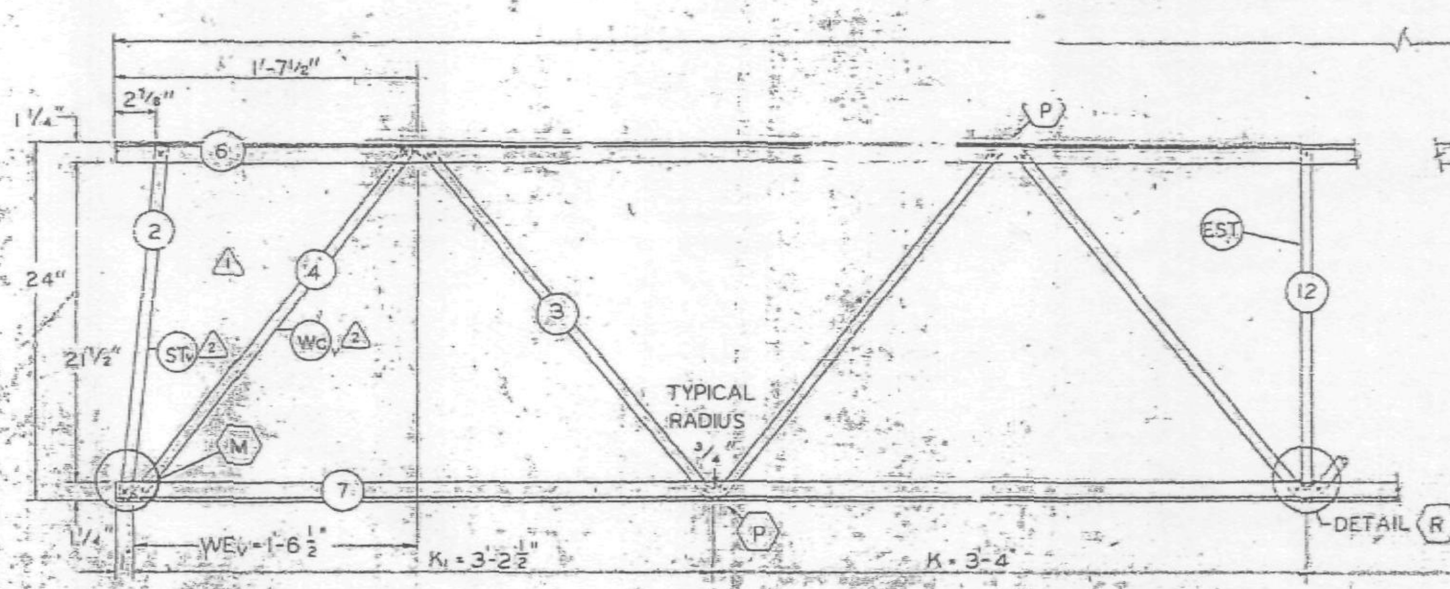

ELEVATION AT EL END

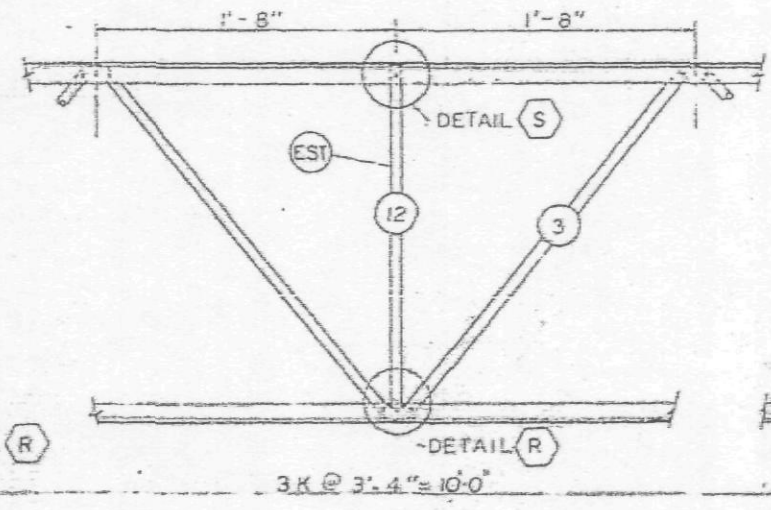

ELEVATION AT ADDED STRUT

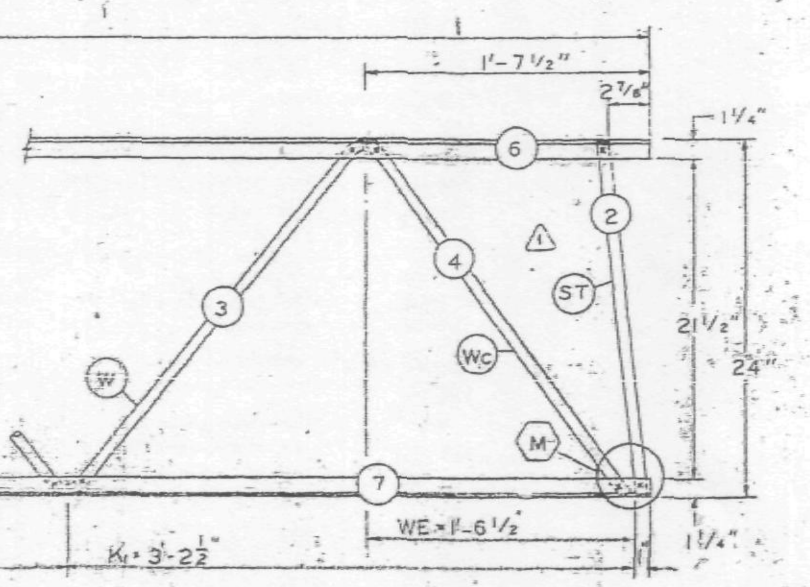

ELEVATION AT ES END

FABRICATION REQUIRMENTS	DESIGN	TOLERANCE
CAMBER AT MIDSPAN	0"	+ ⅜"
DESIGN DEPTH	24"	± ¼"
PANEL "K"	3'-4"	± ¼"
PANEL "K1"	3'-2½"	± ¼"
WEB DEPTH	23⅞"	± ¼"
OVERALL LENGTH	19'-11"	± ⅜"

ALL PANEL POINTS RESISTANCE WELDED (X.). ARC WELDS INDICATED AT SHADED AREAS AND AT BOTTOM CHORD WEB SPLICES. ALL WELD DETAILS SHOWN ON SHEETS ST290 AND ST291.
LETTERS IN HEXAGON INDICATE WELD DETAIL, ie. (A)
(1) LETTERS AND NUMBERS IN SQUARES INDICATE RESISTANCE WELD STRENGTH IDENTIFIED IN THE QUALITY CONTROL PROGRAM, ie. R29.

(2) REF. DWG. 7-AB2-1 4-1-68
7-AB2-6 2-15-68
7-AB4-15,1 1-3-68
7-AB4-16,18 5-6-68
7-AB4-28, 19 & 41 1-3-68
7-AB4-36 4-1-68

PAINT
LACLEDE ELECTROCOAT
RED NO 10001

TRUSS DESIGNATION	TOP CHORD TWO ANGLES				BOTTOM CHORD TWO ANGLES				MAIN WEB "W"					VERTICAL "EST" STRUT					TRUSS DATA		FILLER	
	MK	TYPE STEEL	CHORD SIZE	LENGTH	MK.	TYPE STEEL	CHORD SIZE	LENGTH	MK	TYPE STEEL	DIA	LENGTH	NO OF K	MK.	TYPE STEEL	DIA	LENGTH	NUMBER REQUIRED			NO.	DIA.
2[illegible]	6	A242	1½"x1¼"x.230"	19'-11"	7	A242	1½"x1¼"x.230"	19'-11"	3	A242	.75	30'-6½"	5K @ 3'-4" = 16'-8"	12	A242	.75	1'-10⅞" (2)	2			—	—

ES END	TRUSS DESIGNATION	WE	INCLINED "ST" STRUT				WEB "WC"				
			MK	TYPE STEEL	DIA	LENGTH	MK	TYPE STEEL	PCS	DIA	LENGTH
	24T11-1911	1'-6½"	2	A242	.75	1'-11¾"	4	A242	1	.75	2'-5½"

EL END	TRUSS DESIGNATION	BEARING ANGLES				WEV	DIAGONAL "T" STRUT				INCLINED "STV" STRUT (2)				END STIFFENER MK V5			END STIFFENER MK V6			WEB "WCV" (2)				
		MK	TYPE STEEL	CHORD SIZE	LENGTH		MK.	TYPE STEEL	DIA	LENGTH	MK	TYPE STEEL	DIA	LENGTH	TYPE STEEL	DIA	LENGTH	TYPE STEEL	DIA	LENGTH	MK	TYPE STEEL	PCS	DIA	LENGTH
	24T11-1911	—	—	—	—	1'6½"	—	—	—	—	2	A242	.75	1'-11¾"	—	—	—	—	—	—	4	A242	1	.75	2'-5½"

NO.	DATE	REVISION	BY
(2)	6-26-68	AS NOTED	T.M.C.
(1)	3-19-68	WEB	J.R.P.

BRIDGING TRUSS DETAILS
FOR
WORLD TRADE CENTER – N.Y.C.
FOR
THE PORT OF NEW YORK AUTHORITY

BRIDGING TRUSS 24T11 x 19'-11" LONG
WORLD TRADE CENTER TOWERS A-B

FABRICATION BY LACLEDE STEEL COMPANY

FABRICATED AT: MADISON, ILLINOIS	DESIGN DRAWING NO. 7-AB2-6	PLATE
APPROVED FOR FABRICATION BY. JW FOR P.O.N.Y.A DATE 7/5/68	DRAWN BY: [illegible] DATE FEB 24, 1968	
APPROVED FOR FABRICATION BY FOR FABRICATOR DATE	CHECKED BY J.R. PAUL DATE FEB 24, 1968	IN CHARGE OF PROD. DEV.
DETAILED BY A. C. WEBER	FABRICATION CONT. NO WTC 221	SHEET NO BT211

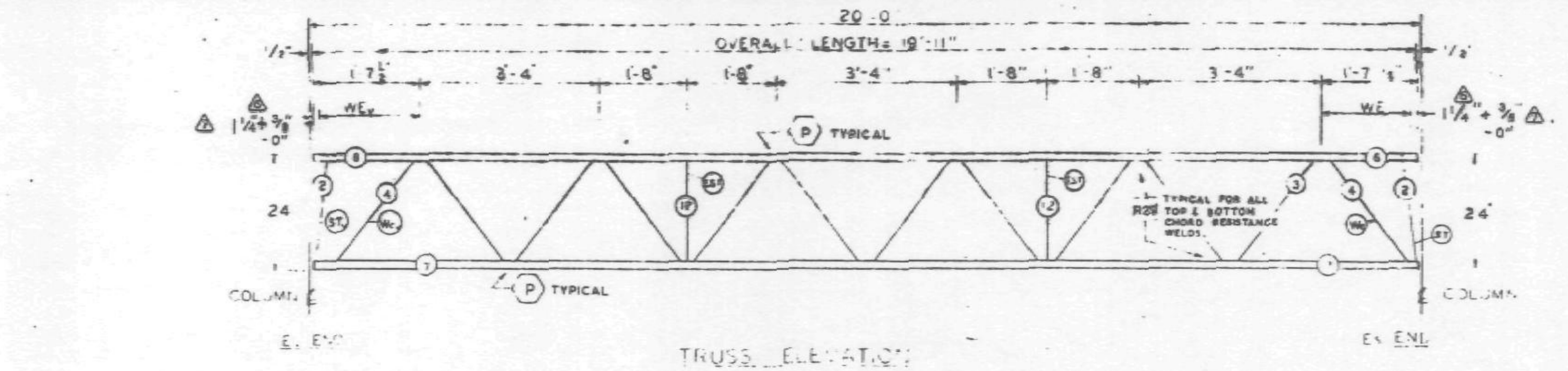

TRUSS ELEVATION

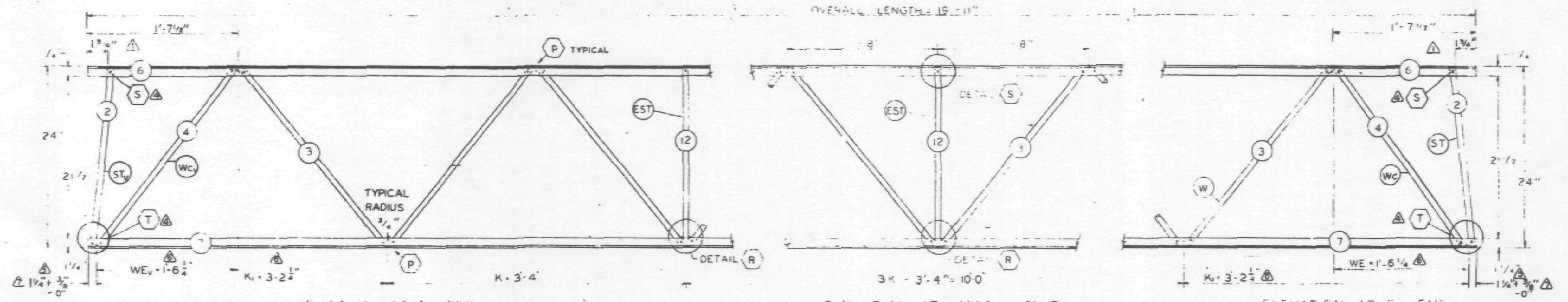

ELEVATION AT E$_L$ END — ELEVATION AT CENTER — ELEVATION AT E$_S$ END

FABRICATION REQUIRMENTS	DESIGN	TOLERANCE
CAMBER AT MIDSPAN	0"	+ 3/8"
DESIGN DEPTH	24"	± 1/4"
PANEL "K"	3'-4"	± 1/4"
PANEL "K$_1$"	3'-2$\frac{1}{2}$"	± 1/4"
WEB DEPTH	23$\frac{1}{2}$"	± 1/4"
OVERALL LENGTH	19'-11"	± 3/8"

ALL PANEL POINTS RESISTANCE WELDED (X)
ARC WELDS INDICATED AT SHADED AREAS
AND AT BOTTOM CHORD WEB SPLICES (▬)
ALL WELD DETAILS SHOWN ON SHEETS ST290
AND ST291.
LETTERS IN HEXAGON INDICATE WELD DETAIL, ie., (A).
LETTERS AND NUMBERS IN SQUARES INDICATE RESISTANCE WELD STRENGTH IDENTIFIED IN THE QUALITY CONTROL PROGRAM, ie., R29.

REF DWG
7-AB2-1 .... 4-1-68 (2)
7-AB2-6 2-15-68
7-AB4-15,1,19 .... 1-3-68 (2)
7-AB4-16,18 .... 5-6-68 (2)
7-AB4-28,41 .... 1-3-68 (2)
7-AB4-38 .... 4-1-68 (1)

PAINT
LACLEDE ELECTROCOAT
RED NO 1060

TRUSS DESIGNATION	TOP CHORD TWO ANGLES				BOTTOM CHORD TWO ANGLES				MAIN WEB "W"					VERTICAL "EST" STRUT					TRUSS DATA		FILLER	
	MK	TYPE STEEL	CHORD SIZE	LENGTH	MK	TYPE STEEL	CHORD SIZE	LENGTH	MK	TYPE STEEL	DIA	LENGTH	NO OF K	MK	TYPE STEEL	DIA	LENGTH	NUMBER REQ'D			NO.	DIA.
24T11A-1911	6	A242	1½x1x.230	19'-11"	7	A242	1x1x.230	19'-11"	3	A242	.75	25'-7½" (3)	5K @ 3'-4" = 16'-8"	12	A242	.75	1'-10" (2)	2			—	—

E$_S$ END TRUSS DESIGNATION	WE (6)	INCLINED "ST" STRUT				WEB "Wc"				
		MK	TYPE STEEL	DIA	LENGTH	MK	TYPE STEEL	PCS	DIA	LENGTH
24T11A-1911	1'-6¼"	2	A242	.75	1'-11¾"	4	A242	1	.75	2'-5½"

E$_L$ END TRUSS DESIGNATION	BEARING ANGLES				WE$_V$ (6)	DIAGONAL "T$_V$" STRUT				INCLINED "ST$_V$" STRUT				END STIFFENER MK Y5			END STIFFENER MK Y6			WEB "Wc$_V$"				
	MK	TYPE STEEL	CHORD SIZE	LENGTH		MK	TYPE STEEL	DIA	LENGTH	MK	TYPE STEEL	DIA	LENGTH	TYPE STEEL	DIA	LENGTH	TYPE STEEL	DIA	LENGTH	MK	TYPE STEEL	PCS	DIA	LENGTH
24T11A-1911	—	—		—	1'-6¼"			—	—	2	A242	.75	1'-11½"	—	—	—	—	—	—	4	A242	1	.75	2'-5½"

NO.	DATE	REVISION	BY
7	8-29-68	END DIST. (2)	T.M.C.
6	8-28-68	AS NOTED	T.M.C.
5	7-27-68	END DIST. (2)	T.M.C.
4	7-8-68	AS NOTED	T.M.C.
3	7-3-68	MAIN WEB	T.M.C.
2	6-26-68	LENGTH OF "EST." REF. DWG.	T.M.C.
1	4-25-68	END STRUT DIMENSIONS	T.M.C.

BRIDGING TRUSS DETAILS
FOR
WORLD TRADE CENTER - N.Y.C.
FOR
THE PORT OF NEW YORK AUTHORITY

BRIDGING TRUSS 24T11A x 19'-11" LONG
WORLD TRADE CENTER TOWERS A-B

FABRICATION BY LACLEDE STEEL COMPANY
FABRICATED AT MADISON, ILLINOIS
DESIGN DRAWING NO 7-AB2-6 PLATE
APPROVED FOR FABRICATION BY James White FOR PONYA DATE 9/4/68
DRAWN BY S.R. DATE FEB 24, 1968
APPROVED FOR FABRICATION BY ______ FOR FABRICATOR DATE ____
CHECKED BY J.R. PAUL DATE FEB 24, 1968
IN CHARGE OF PROD. DEV.
DETAILED BY A C WEBER
FABRICATION CONT NO WTC 221
SHEET NO BT211A

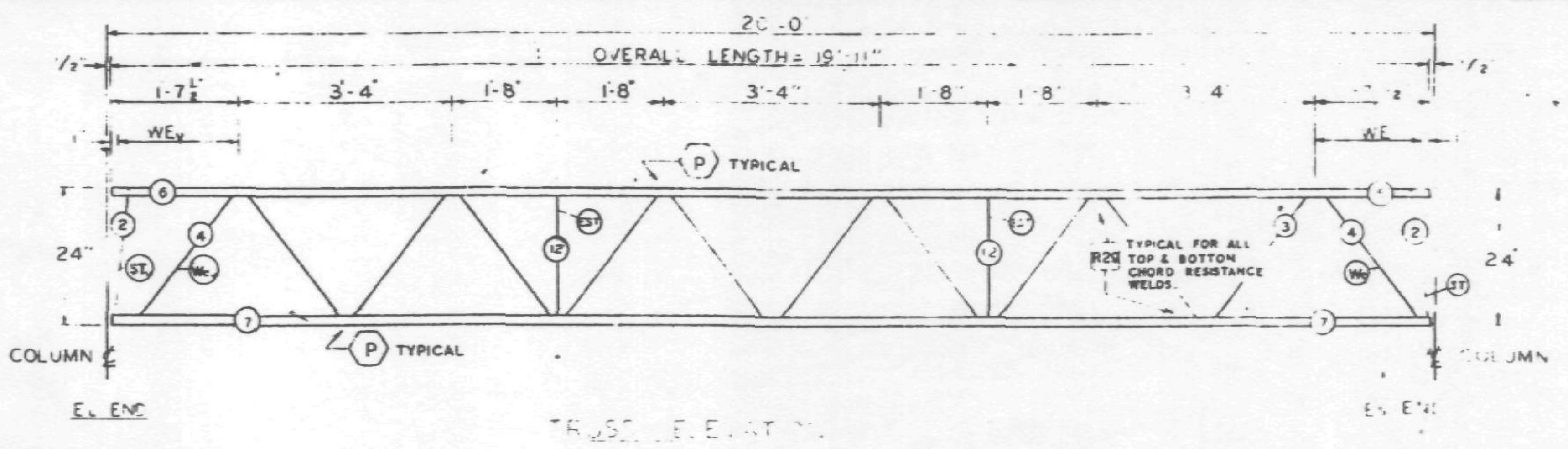

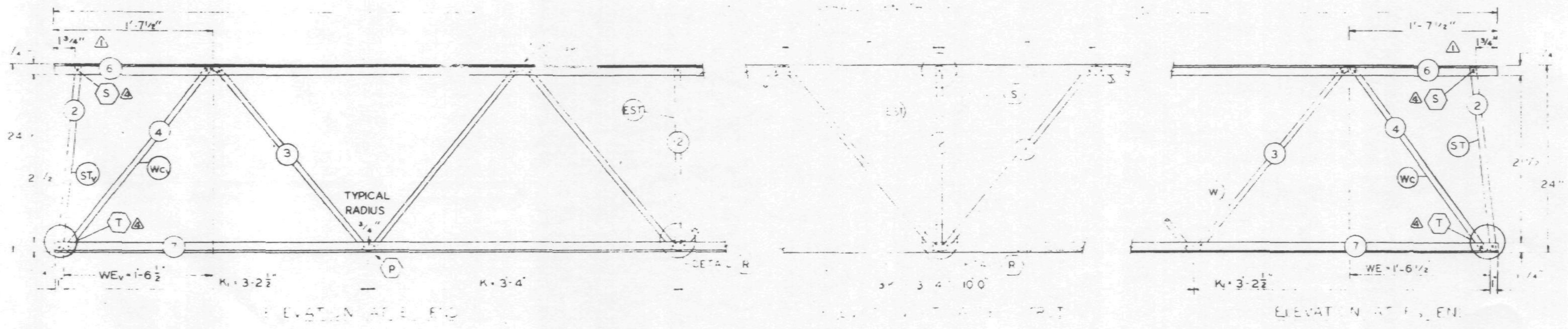

FABRICATION REQU RMENTS	DESIGN	TOLERANCE
CAMBER AT MIDSPAN	0"	+ ⅜"
DESIGN DEPTH	24"	± ¼"
PANEL "K"	3'-4"	± ¼"
PANEL "K1"	3'-2½"	± ¼"
WEB DEPTH	23⅞"	± ¼"
OVERALL LENGTH	19'-11"	± ⅜"

ALL PANEL POINTS RESISTANCE WELDED (x)
ARC WELDS INDICATED AT SHADED AREAS
AND AT BOTTOM CHORD WEB SPLICES
ALL WELD DETAILS SHOWN ON SHEETS ST290 AND ST291.
LETTERS IN HEXAGON INDICATE WELD DETAIL, ie., (A)
LETTERS AND NUMBERS IN SQUARES INDICATE RESISTANCE WELD STRENGTH IDENTIFIED IN THE QUALITY CONTROL PROGRAM, ie., R29.

REF DWG
7-AB2-1 — 4-1-68 (1)
7-AB2-6 — 2-15-68
7-AB4-15,1,19 — 1-3-68 (2)
7-AB4-16,18 — 5-6-68 (2)
7-AB4-28,41 — [illegible] 3 68 (2)
7-AB4-38 — 4-1-68 (1)

PAINT
LACLEDE ELECTROCOAT
RED NO 10001

TRUSS DESIGNATION	TOP CHORD TWO ANGLES				BOTTOM CHORD TWO ANGLES				MAIN WEB "W"					VERTICAL EST STRUT				TRUSS DATA	FILLER	
	MK	TYPE STEEL	CHORD SIZE	LENGTH	MK	TYPE STEEL	CHORD SIZE	LENGTH	MK	TYPE STEEL	DIA	LENGTH	NUMBER	MK	TYPE STEEL	DIA	LENGTH		NO.	DIA
[illegible]-911	6	A242	1½ x 1¼ x 230	19'-11"	7	A242	1½ x 1¼ x 230	19'-11"	3	A242	.75	25'-7½" (3)	5K · 3'-4" = 6'-8"	12	A242	.75	1'-10⅞" (2)		—	—

Es END TRUSS DESIGNATION	WE	INCLINED "ST" STRUT				WEB "Wc"				
		MK	TYPE STEEL	DIA	LENGTH	MK	TYPE STEEL	PCS	DIA	LENGTH
24T11A-1911	1'-6½"	2	A242	75	1'-11¾"	4	A242	1	.75	2'-5½"

EL END TRUSS DESIGNATION	BEARING ANGLES				WEv	DIAGONAL "Tv" STRUT				INCLINED "STv" STRUT				END STIFFENER MK 25			END STIFFENER MK 26			WEB "Wcv"				
	MK	TYPE STEEL	CHORD SIZE	LENGTH		MK	TYPE STEEL	DIA	LENGTH	MK	TYPE STEEL	DIA	LENGTH	TYPE STEEL	DIA	LENGTH	TYPE STEEL	DIA	LENGTH	MK	TYPE STEEL	PCS	DIA	LENGTH
24T11A-1911	—	—	—	—	1'-6½"	—	—	—	—	2	A242	.75	1'-11½"	—	—	—	—	—	—	4	A242	1	.75	2'-5½"

NO.	DATE	REVISION	BY
4	7-8-68	AS NOTED	T.M.C.
3	7-3-68	MAIN WEB	T.M.C.
2	6-26-68	LENGTH OF "EST," REF. DWG.	T.M.C.
1	4-25-68	END STRUT DIMENSIONS	T.M.C.

BRIDGING TRUSS DETAILS
FOR
WORLD TRADE CENTER - NYC
FOR
THE PORT OF NEW YORK AUTHORITY

BRIDGING TRUSS 24T11A x 19'-11" LONG
WORLD TRADE CENTER TOWERS A-B

FABRICATION BY LACLEDE STEEL COMPANY

FABRICATED AT MADISON, ILLINOIS		DESIGN DRAWING NO 7-AB2-6	PLATE
APPROVED FOR FABRICATION BY JW FOR PONYA	DATE 7/9/68	DRAWN BY [illegible] DATE FEB 24, 1968	
APPROVED FOR FABRICATION BY FOR FABRICATOR	DATE	CHECKED BY J.R.PAUL DATE FEB 24, 1968	IN CHARGE OF PROD [illegible]
DETAILED BY A.C. WEBER		FABRICATION CONT NO WTC 221	SHEET NO BT211A

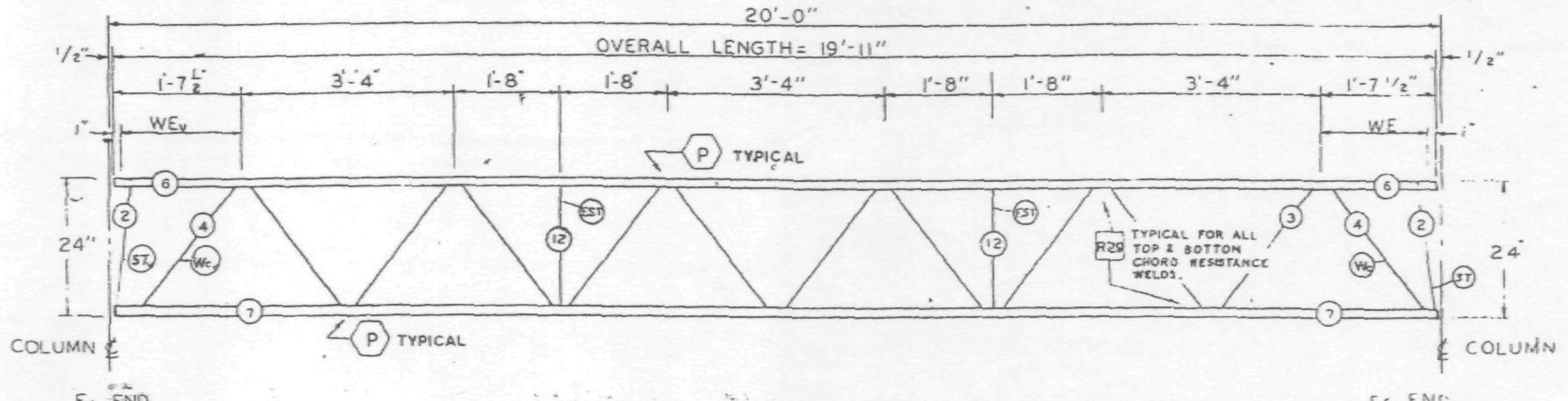

TRUSS ELEVATION

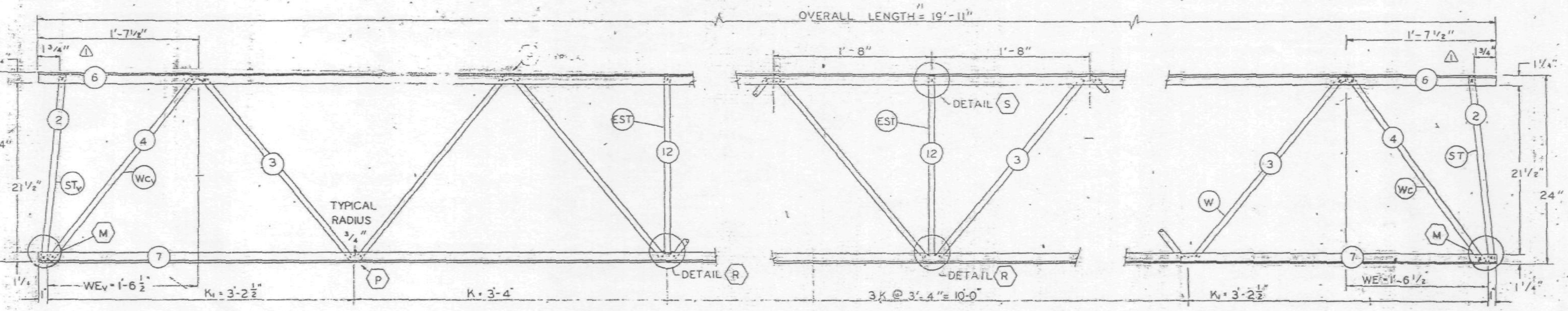

ELEVATION AT EL END

ELEVATION AT ADDED STRUT

ELEVATION AT Es END

FABRICATION REQUIRMENTS	DESIGN	TOLERANCE
CAMBER AT MIDSPAN	0"	+ 3/8
DESIGN DEPTH	24"	± 1/4"
PANEL "K"	3'-4"	± 1/4"
PANEL "K1"	3'-2 1/2"	± 1/4"
WEB DEPTH	23 7/8"	± 1/4"
OVERALL LENGTH	19'-11"	± 3/8"

ALL PANEL POINTS RESISTANCE WELDED (x).
ARC WELDS INDICATED AT SHADED AREAS AND AT BOTTOM CHORD WEB SPLICES (////).
ALL WELD DETAILS SHOWN ON SHEETS ST290 AND ST291.
LETTERS IN HEXAGON INDICATE WELD DETAIL, ie., ⟨A⟩.
LETTERS AND NUMBERS IN SQUARES INDICATE RESISTANCE WELD STRENGTH IDENTIFIED IN THE QUALITY CONTROL PROGRAM, ie., R29.

REF. DWG.
7-AB2-1 4-1-68 (2)
7-AB2-5 2-15-68
7-AB4-15.1,19 1-3-68 (2)
7-AB4-16,18 5-6-68 (2)
7-AB4-28,41 1-3-68 (2)
7-AB4-38 4-1-68 (2)

PAINT
LACLEDE ELECTROCOAT
RED NO 10001

TRUSS DESIGNATION	TOP CHORD TWO ANGLES				BOTTOM CHORD TWO ANGLES				MAIN WEB "W"					VERTICAL "EST" STRUT					TRUSS DATA		FILLER	
	MK	TYPE STEEL	CHORD SIZE	LENGTH	MK	TYPE STEEL	CHORD SIZE	LENGTH	MK	TYPE STEEL	DIA	LENGTH	NO OF K	MK	TYPE STEEL	DIA	LENGTH	NUMBER REQUIRED			NO.	DIA.
[illegible]-1911	6	A242	1 1/2" x 1 1/4" x .230	19'-11"	7	A242	1 1/2" x 1 1/4" x .230	19'-11"	3	A242	.75	30'-6 1/2"	5K @ 3'-4" = 16'-8"	12	A242	.75	1'-10 7/8" (2)	2			—	—

Es END	TRUSS DESIGNATION	WE	INCLINED "ST" STRUT				WEB "Wc"				
			MK	TYPE STEEL	DIA	LENGTH	MK	TYPE STEEL	PCS	DIA	LENGTH
	24T11A-1911	1'-6 1/2"	2	A242	.75	1'-11 3/4"	4	A242	1	.75	2'-5 1/2"

EL END	TRUSS DESIGNATION	BEARING ANGLES				WEv	DIAGONAL "Tv" STRUT				INCLINED "STv" STRUT				END STIFFENER MK V5			END STIFFENER MK V6			WEB "Wcv"				
		MK	TYPE STEEL	CHORD SIZE	LENGTH		MK	TYPE STEEL	DIA	LENGTH	MK	TYPE STEEL	DIA	LENGTH	TYPE STEEL	DIA	LENGTH	TYPE STEEL	DIA	LENGTH	MK	TYPE STEEL	PCS	DIA	LENGTH
	24T11A-1911	—	—	—	—	1'-6 1/2"	—	—	—	—	2	A242	.75	1'-11 3/4"	—	—	—	—	—	—	4	A242	1	.75	2'-5 1/2"

NO.	DATE	REVISION	BY
2	6-26-68	LENGTH OF "EST", REF. DWG.	T.M.C.
1	4-25-68	END STRUT DIMENSIONS	T.M.C.

BRIDGING TRUSS DETAILS
FOR
WORLD TRADE CENTER - N.Y.C.
FOR
THE PORT OF NEW YORK AUTHORITY

BRIDGING TRUSS 24T11A x 19'-11" LONG
WORLD TRADE CENTER TOWERS A-B

FABRICATION BY LACLEDE STEEL COMPANY
FABRICATED AT MADISON, ILLINOIS
DESIGN DRAWING NO. 7-AB2-6
PLATE
APPROVED FOR FABRICATION BY: JW FOR "PONYA" DATE 7/5/68
DRAWN BY: [illegible] DATE FEB 24, 1968
APPROVED FOR FABRICATION BY FOR FABRICATOR DATE
CHECKED BY J.R. PAUL DATE FEB 24, 1968
IN CHARGE OF PROD. DEV.
DETAILED BY A. C. WEBER
FABRICATION CONT. NO. W.T.C. 221
SHEET NO. BT211A

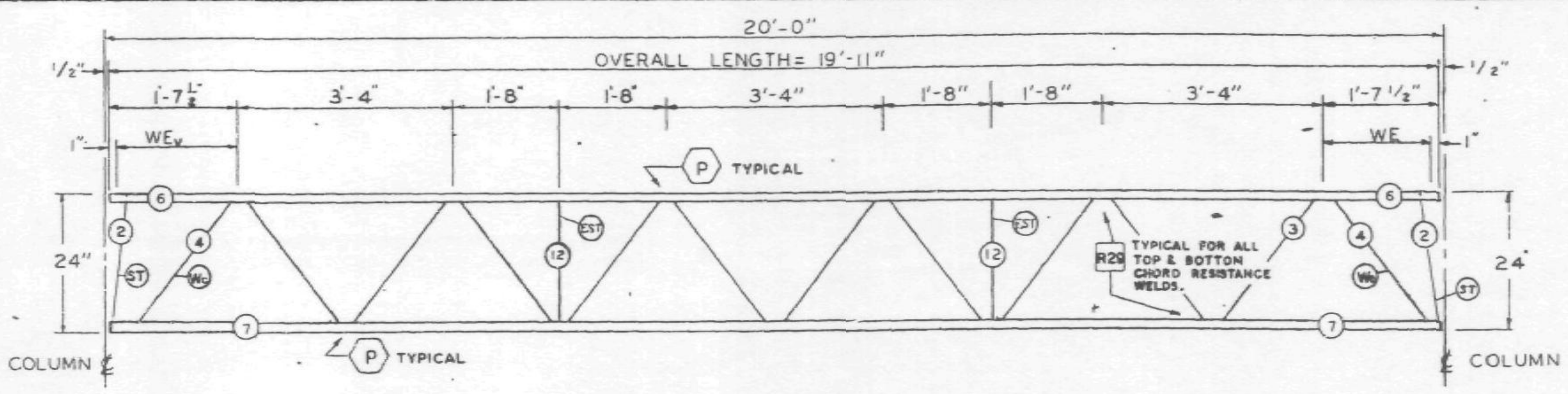

TRUSS ELEVATION

FABRICATION REQUIRMENTS		
	DESIGN	TOLERANCE
CAMBER AT MIDSPAN	0"	+ 3/8"
DESIGN DEPTH	24"	± 1/4"
PANEL "K"	3'-4"	± 1/4"
PANEL "K1"	3'-2 1/2"	± 1/4"
WEB DEPTH	23 7/8"	± 1/8"
OVERALL LENGTH	19'-11"	± 3/8"

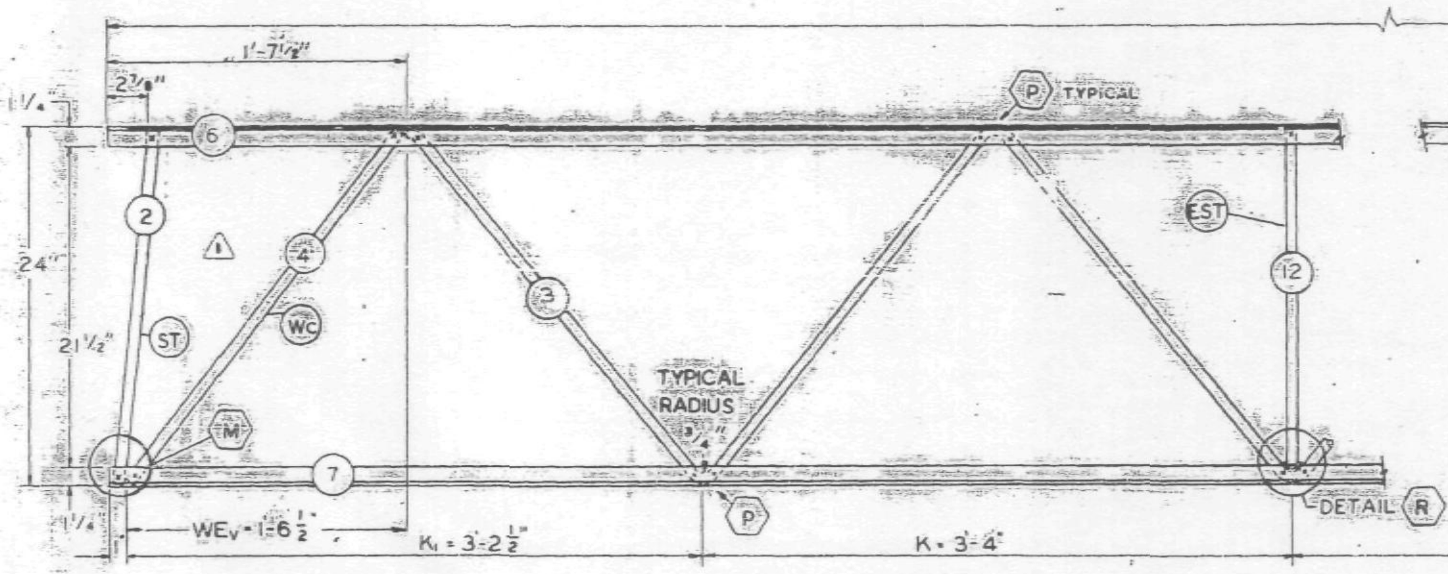

ELEVATION AT EL END

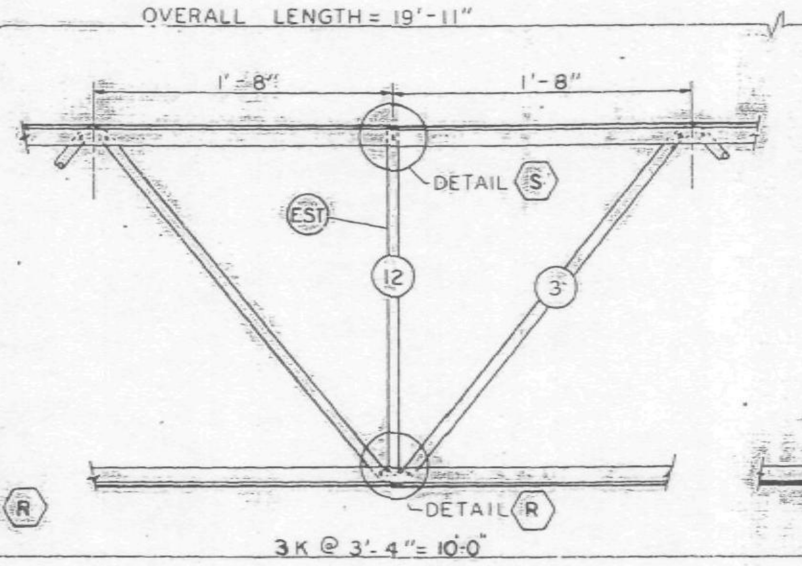

ELEVATION AT ADDED STRUT

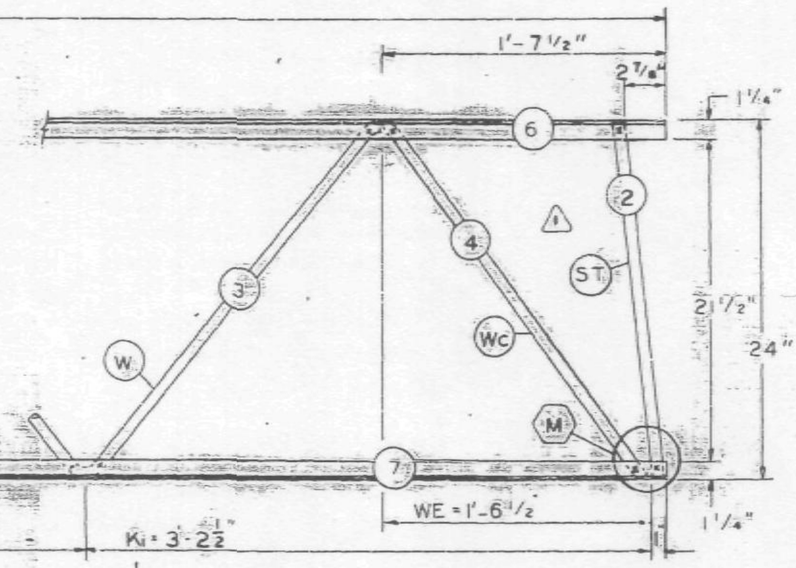

ELEVATION AT Es END

ALL PANEL POINTS RESISTANCE WELDED (X).
ARC WELDS INDICATED AT SHADED AREAS
AND AT BOTTOM CHORD WEB SPLICES (HHH)
ALL WELD DETAILS SHOWN ON SHEETS ST290
AND ST291.
LETTERS IN HEXAGON INDICATE WELD DETAIL, ie., (A).
⚠1 LETTERS AND NUMBERS IN SQUARES INDICATE RESISTANCE WELD STRENGTH IDENTIFIED IN THE QUALITY CONTROL PROGRAM, ie., [R29].

REF. DWG.	
7-AB2-1	2-15-68
7-AB2-6	2-15-68
7-AB4-15.1	10-27-67
7-AB4-16,18 & 19	1-3-68
7-AB4-28, 38 & 41	1-3-68

PAINT:
LACLEDE ELECTROCOAT
RED NO. 10001

TRUSS DESIGNATION	TOP CHORD TWO ANGLES				BOTTOM CHORD TWO ANGLES				MAIN WEB "W"					VERTICAL "EST" STRUT					TRUSS DATA		FILLER	
	MK.	TYPE STEEL	CHORD SIZE	LENGTH	MK.	TYPE STEEL	CHORD SIZE	LENGTH	MK.	TYPE STEEL	DIA	LENGTH	NO OF K	MK	TYPE STEEL	DIA	LENGTH	NUMBER REQUIRED			NO.	DIA.
24T11 - 1911	6	A242	1 1/2" x 1 1/4" x .230	19'-11"	7	A242	1 1/2" x 1 1/4" x .230"	19'-11"	3	A242	.75	30'-6 1/2"	5K @ 3'-4" = 16'-8"	12	A242	.75	1'-10 1/8"	2			—	—

Es END	TRUSS DESIGNATION	WE	INCLINED "ST" STRUT				WEB "Wc"				
			MK.	TYPE STEEL	DIA	LENGTH	MK	TYPE STEEL	PCS	DIA	LENGTH
	24T11 - 1911	1'-6 1/2"	2	A242	.75	1'-11 3/4"	4	A242	1	.75	2'-5 1/2"

EL END	TRUSS DESIGNATION	BEARING ANGLES				WEv	DIAGONAL "T" STRUT				INCLINED "ST" STRUT				END STIFFENER MK V5			END STIFFENER MK V6			WEB "Wc"				
		MK	TYPE STEEL	CHORD SIZE	LENGTH		MK.	TYPE STEEL	DIA	LENGTH	MK.	TYPE STEEL	DIA	LENGTH	TYPE STEEL	DIA.	LENGTH	TYPE STEEL	DIA.	LENGTH	MK	TYPE STEEL	PCS	DIA	LENGTH
	24T11 - 1911	—	—	—	—	1'-6 1/2"	—	—	—	—	2	A242	.75	1'-11 3/4"	—	—	—	—	—	—	4	A242	1	.75	2'-5 1/2"

SKILLING HELLE CHRISTIANSEN ROBERTSON
Structural & Civil Engineers

NO.	DATE	REVISION	BY
⚠1	3-19-68	WEB	J.R.P.

BRIDGING TRUSS DETAILS
FOR
WORLD TRADE CENTER - N.Y.C.
FOR
THE PORT OF NEW YORK AUTHORITY

BRIDGING TRUSS 24T11 x 19'-11" LONG
WORLD TRADE CENTER TOWERS A-B

FABRICATION BY LACLEDE STEEL COMPANY

FABRICATED AT MADISON, ILLINOIS		DESIGN DRAWING NO. 7-AB2-6	PLATE
APPROVED FOR FABRICATION BY [signature] FOR P.O.N.Y.A	DATE 4/24/68	DRAWN BY: [initials] DATE FEB 24, 1968	
APPROVED FOR FABRICATION BY FOR FABRICATOR	DATE	CHECKED BY J.R. PAUL DATE FEB 24, 1968	IN CHARGE OF PROD. DEV.
DETAILED BY A.C. WEBER (LACLEDE STEEL CO.)		FABRICATION CONT. NO. W.T.C. 221	SHEET NO. BT211

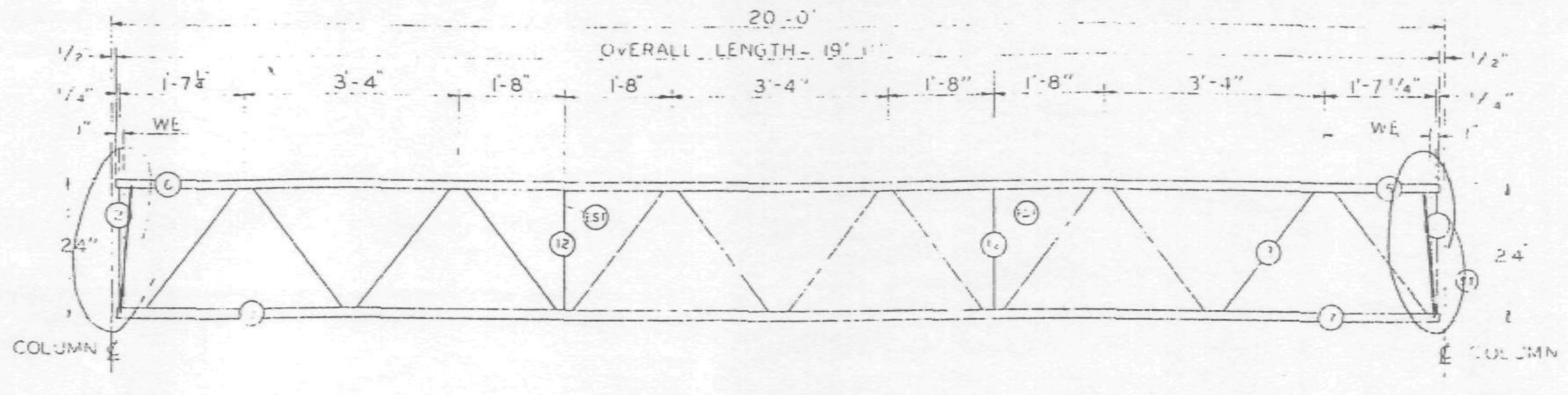

TRUSS ELEVATION

FABRICATION REQUIRMENTS	DESIGN	TOLERANCE
CAMBER AT MIDSPAN	0"	± 3/4"
DESIGN DEPTH	24"	± 1/4"
PANEL "K"	3'-4"	± 1/4"
PANEL "K₁"	3'-2 1/2"	± 1/4"
WEB DEPTH	23 7/8"	± 1/4"
OVERALL LENGTH	19'-11"	± 3/8"

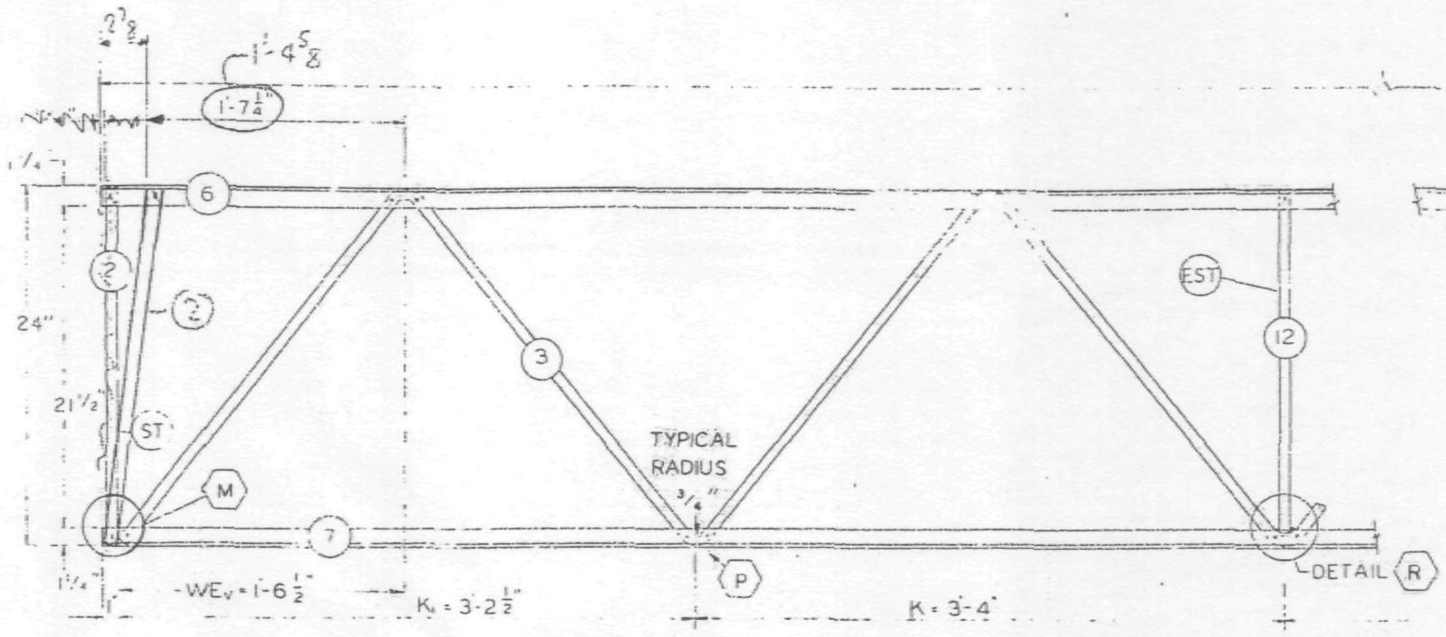

ELEVATION AT EL END

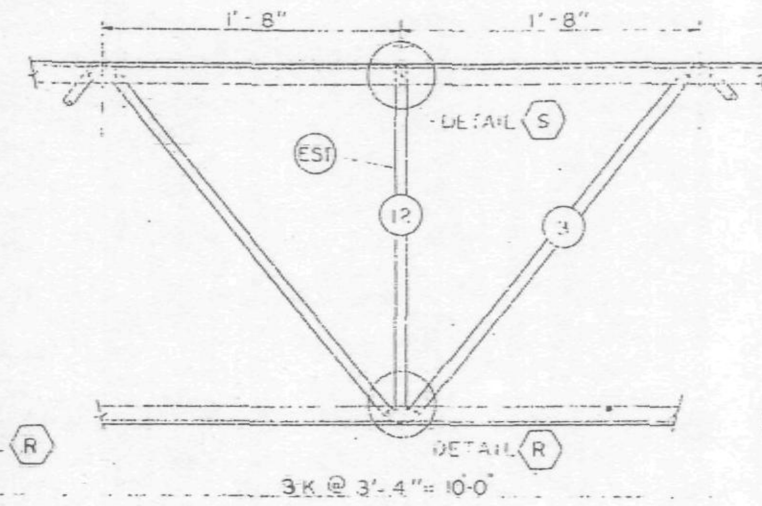

ELEVATION AT ADDED STRUT

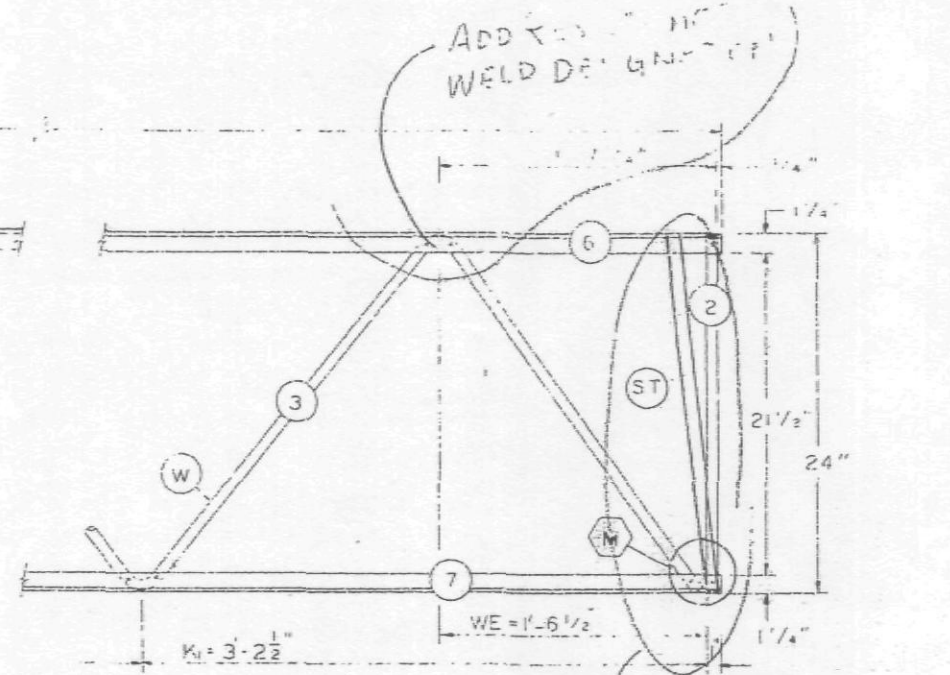

ELEVATION AT Es END

See left end

ALL PANEL POINTS RESISTANCE WELDED (X).
ARC WELDS INDICATED AT SHADED AREAS
AND AT BOTTOM CHORD WEB SPLICES (IIII)
ALL WELD DETAILS SHOWN ON SHEETS ST290
AND ST291.
BOXED LETTERS INDICATE WELD DETAIL, ie. (A).

REF. DWG.

7-AB2-1	2-15-68
7-AB2-6	2-15-68
7-AB4-15.1	10-20-67
7-AB4-16, 18 & 19	1-3-68
7-AB4-28, 38 & 41	1-3-68

PAINT
LACLEDE ELECTROCOAT
RED NO 10001

TRUSS DESIGNATION	TOP CHORD TWO ANGLES				BOTTOM CHORD TWO ANGLES				MAIN WEB "W"					VERTICAL "EST" STRUT					TRUSS DATA		FILLER	
	MK	TYPE STEEL	CHORD SIZE	LENGTH	MK	TYPE STEEL	CHORD SIZE	LENGTH	MK	TYPE STEEL	DIA	LENGTH	NO OF K	MK	TYPE STEEL	DIA	LENGTH	NUMBER REQUIRED			NO.	DIA.
24T11-1911	6	A242	1 1/2 x 1 1/4 x .230	19'-11"	7	A242	1 1/2 x 1 1/4 x .230"	19'-11"	3	A242	.75	30'-6 3/8"	4 K @ 3'-4" = 13'-4" 2 K1 @ 3'-2 1/2" = 6'-5"	12	A242	.75	1'-10 1/8"	2				

Es END	TRUSS DESIGNATION	WE	VERTICAL (INCLINED) "ST" STRUT			
			MK	TYPE STEEL	DIA	LENGTH
	24T11-1911	1'-6 1/2"	2	A242	.75	1'-11 3/4"

EL END	TRUSS DESIGNATION	BEARING ANGLES				WEv	DIAGONAL "T" STRUT				INCLINED VERTICAL "ST" STRUT				END STIFFENER					
															MK V5			MK V6		
		MK	TYPE STEEL	CHORD SIZE	LENGTH		MK.	TYPE STEEL	DIA	LENGTH	MK	TYPE STEEL	DIA	LENGTH	TYPE STEEL	DIA	LENGTH	TYPE STEEL	DIA.	LENGTH
	24T11-1911	—	—	—	—	1'-6 1/2"	—	—	—	—	2	A242	.75	1'-11 3/4"	—	—	—	—	—	—

SKILLING, HELLE CHRISTIANSEN, ROBERTSON
Structural & Civil Engineers
3/20/68 SK.

BRIDGING TRUSS DETAILS
FOR
WORLD TRADE CENTER - N.Y.C.
FOR
THE PORT OF NEW YORK AUTHORITY

BRIDGING TRUSS 24T11 x 19'-11" LONG
WORLD TRADE CENTER TOWERS A-B

FABRICATION BY LACLEDE STEEL COMPANY

FABRICATED AT MADISON, ILLINOIS		DESIGN DRAWING NO 7-AB2-6	PLATE
APPROVED FOR FABRICATION BY ____ FOR PONYA	DATE	DRAWN BY [illegible] DATE FEB 24, 1968	
APPROVED FOR FABRICATION BY ____ FOR FABRICATOR	DATE	CHECKED BY J.R. PAUL DATE FEB 24, 1968	IN CHARGE OF PROD DEV
LACLEDE STEEL CO. DETAILED BY A.C. WEBER		FABRICATION CONT NO W.T.C. 221	SHEET NO BT211

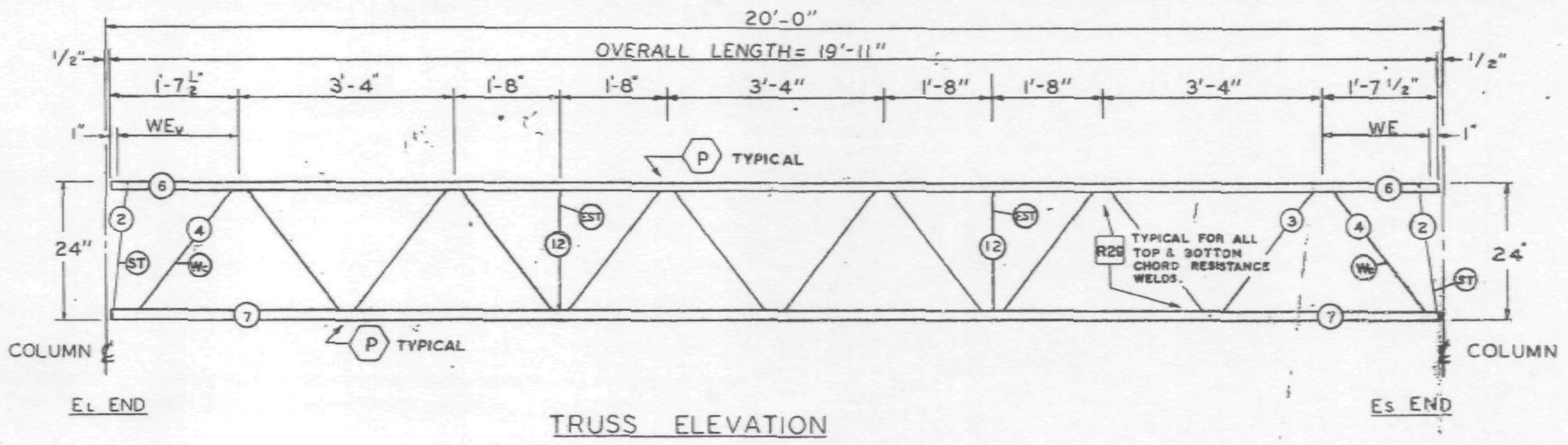

TRUSS ELEVATION

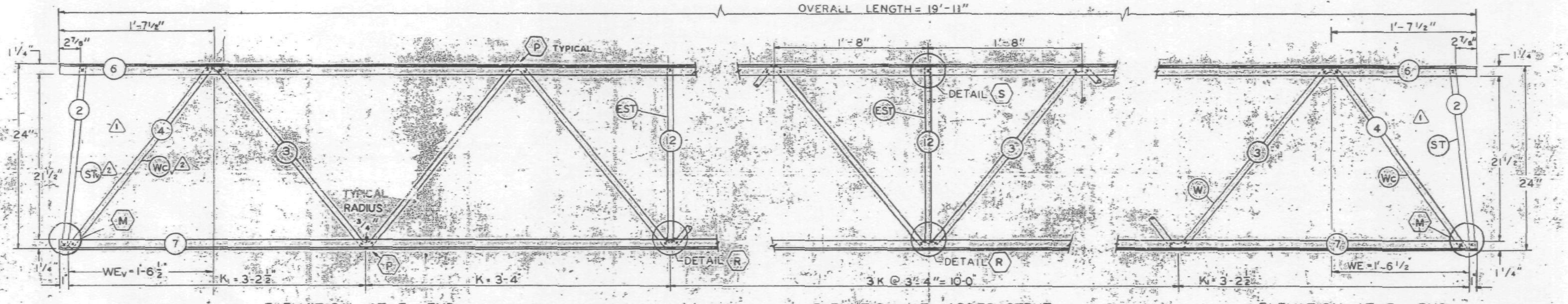

ELEVATION AT EL END

ELEVATION AT ADDED STRUT

ELEVATION AT Es END

FABRICATION REQUIRMENTS		
	DESIGN	TOLERANCE
CAMBER AT MIDSPAN	0"	+ 3/8"
DESIGN DEPTH	24"	± 1/4"
PANEL "K"	3'-4"	± 1/4"
PAN. "K1"	3'-2 1/2"	± 1/4"
WEB DEPTH	23 7/8"	± 1/4"
OVERALL LENGTH	19'-11"	± 3/8"

ALL PANEL POINTS RESISTANCE WELDED (x).
ARC WELDS INDICATED AT SHADED AREAS AND AT BOTTOM CHORD WEB SPLICES (///).
ALL WELD DETAILS SHOWN ON SHEETS ST290 AND ST291.
LETTERS IN HEXAGON INDICATE WELD DETAIL, ie. (A).
(1) LETTERS AND NUMBERS IN SQUARES INDICATE RESISTANCE WELD STRENGTH IDENTIFIED IN THE QUALITY CONTROL PROGRAM, ie., [R29].

(2) REF. DWG.

7-AB2-1	4-1-68
7-AB2-6	2-15-68
7-AB4-15.1	1-3-68
7-AB4-16.18	5-6-68
7-AB4-28, 19 & 41	1-3-68
7-AB4-38	4-1-68

PAINT
LACLEDE ELECTROCOAT
RED NO. 10001

TRUSS DESIGNATION	TOP CHORD TWO ANGLES				BOTTOM CHORD TWO ANGLES				MAIN WEB "W"					VERTICAL "EST" STRUT					TRUSS DATA		FILLER	
	MK.	TYPE STEEL	CHORD SIZE	LENGTH	MK.	TYPE STEEL	CHORD SIZE	LENGTH	MK.	TYPE STEEL	DIA.	LENGTH	NO. OF K.	MK.	TYPE STEEL	DIA.	LENGTH	NUMBER REQUIRED			NO.	DIA.
24T11 - 1911	6	A242	1½"x1¼"x.230"	19'-11"	7	A242	1½"x1¼"x.230"	19'-11"	3	A242	.75	25'-7½" (3)	5K @ 3'-4" = 16'-8"	12	A242	.75	1'-10⅞" (2)	2				

Es END	TRUSS DESIGNATION	WE	INCLINED "ST" STRUT				WEB "Wc"				
			MK.	TYPE STEEL	DIA.	LENGTH	MK	TYPE STEEL	PCS	DIA	LENGTH
	24T11 - 1911	1'-6½"	2	A242	.75	1'-11¾"	4	A242	1	.75	2'-5½"

EL END	TRUSS DESIGNATION	BEARING ANGLES				WEv	DIAGONAL "T" STRUT				INCLINED "STv" STRUT (2)				END STIFFENER MK V5			END STIFFENER MK V6			WEB "Wcv" (2)				
		MK.	TYPE STEEL	CHORD SIZE	LENGTH		MK.	TYPE STEEL	DIA.	LENGTH	MK.	TYPE STEEL	DIA.	LENGTH	TYPE STEEL	DIA.	LENGTH	TYPE STEEL	DIA.	LENGTH	MK	TYPE STEEL	PCS	DIA.	LENGTH
	24T11 - 1911	—	—	—	—	1'-6½"	—	—	—	—	2	A242	.75	1'-11¾"	—	—	—	—	—	—	4	A242	1	.75	2'-5½"

NO.	DATE	REVISION	BY
(3)	7-3-68	MAIN WEB	T.M.C.
(2)	6-26-68	AS NOTED	T.M.C.
(1)	3-19-68	WEB	J.R.P.

1201D

BRIDGING TRUSS DETAILS
FOR
WORLD TRADE CENTER - N.Y.C.
FOR
THE PORT OF NEW YORK AUTHORITY

BRIDGING TRUSS 24T11 x 19'-11" LONG
WORLD TRADE CENTER TOWERS A-B

FABRICATION BY: LACLEDE STEEL COMPANY

FABRICATED AT: MADISON, ILLINOIS		DESIGN DRAWING NO. 7-AB2-6	PLATE
APPROVED FOR FABRICATION BY ______ FOR P.O.N.Y.A.	DATE	DRAWN BY: S.A. DATE: FEB 24, 1968	
APPROVED FOR FABRICATION BY ______ FOR FABRICATOR.	DATE	CHECKED BY: J.R. PAUL DATE: FEB 24, 1968	IN CHARGE OF PROD. DEV.
LACLEDE STEEL CO. DETAILED BY: A.C. WEBER		FABRICATION CONT. NO. W.T.C. 221	SHEET NO. BT211

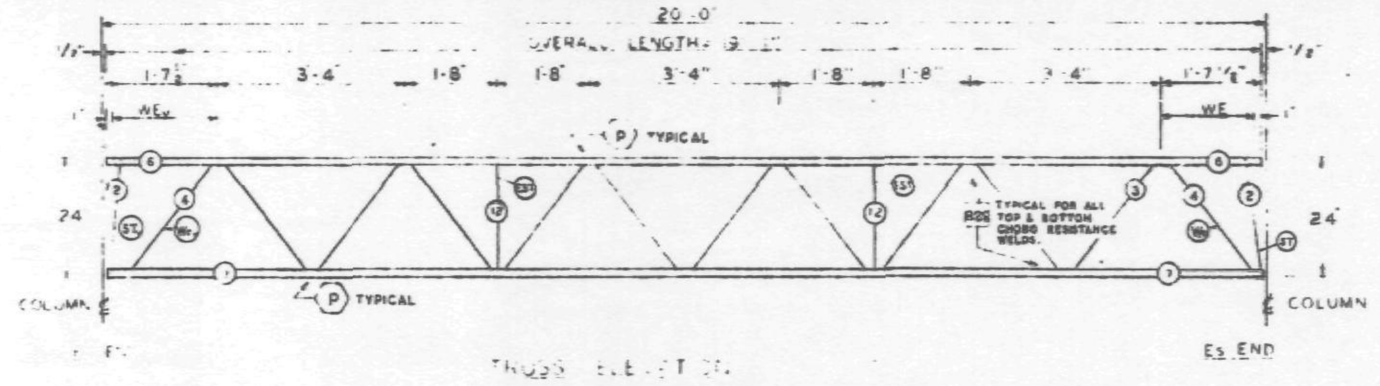

TRUSS ELEVATION

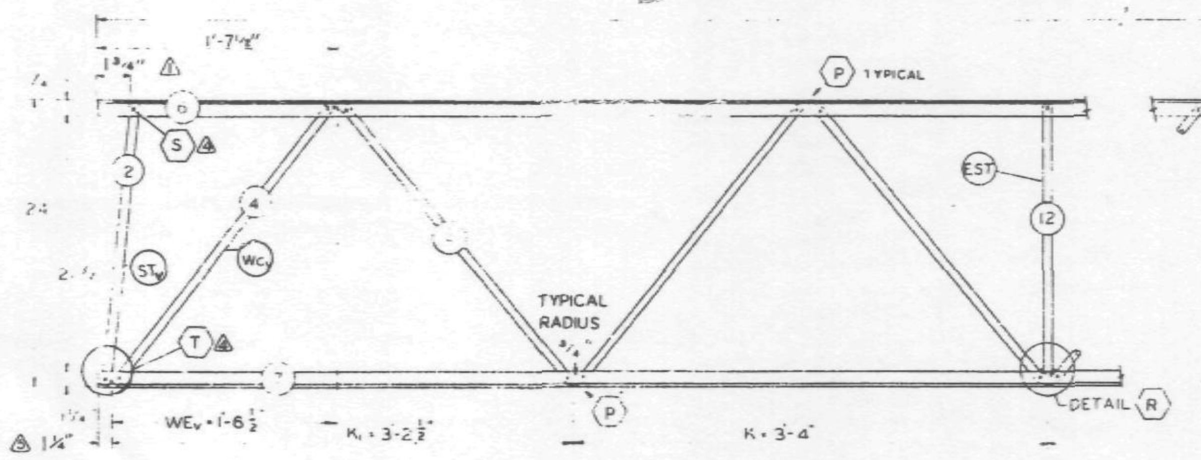

ELEVATION AT EL END

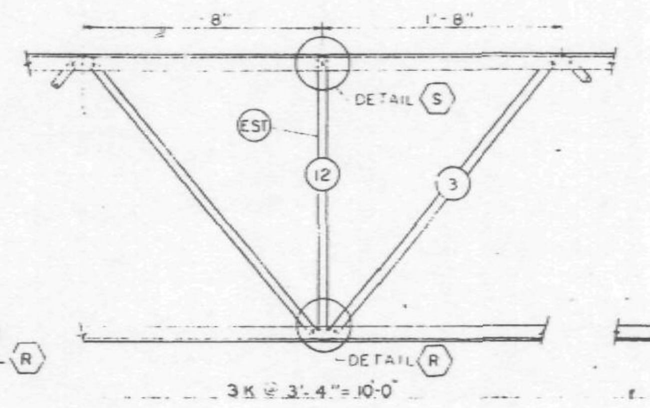

ELEVATION AT ADDED STRUT

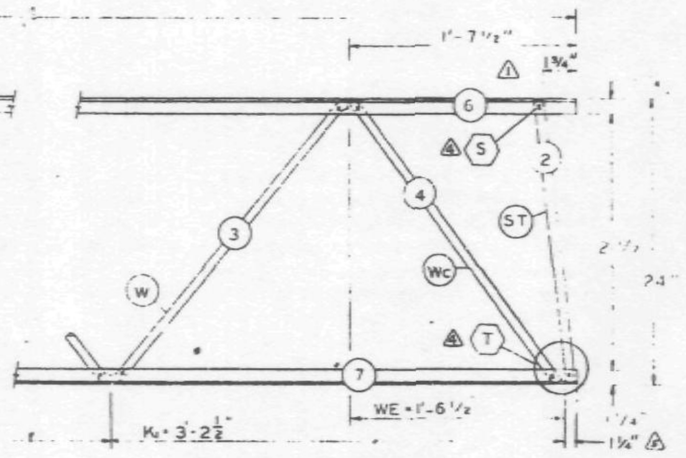

ELEVATION AT Es END

FABRICATION REQUIREMENTS	DESIGN	TOLERANCE
CAMBER AT MIDSPAN	0"	± 1/8"
DESIGN DEPTH	24"	± 1/4
PANEL "K"	3'-4	± 1/8
PANEL "KL"	3'-2½"	± 1/4"
WEB DEPTH	23⅞"	± 1/4"
OVERALL LENGTH	19'-11"	± 1/8"

ALL PANEL POINTS RESISTANCE WELDED. ARC WELDS INDICATED AT SHADED AREAS AND AT BOTTOM CHORD WEB SPLICES. ALL WELD DETAILS SHOWN ON SHEETS ST290 AND ST291.
LETTERS IN HEXAGON INDICATE WELD DETAIL. LETTERS AND NUMBERS IN SQUARES INDICATE RESISTANCE WELD STRENGTH IDENTIFIED IN THE QUALITY CONTROL PROGRAM, i.e., R29.

REF. DWG.

7-AB2-6	4-1-68 ⚠1
7-AB2-...	2-19-68
7-AB4-15,17,19	1-2-68 ⚠2
7-AB4-16,18	5-6-68 ⚠2
7-AB4-28,41	... ⚠2
7-AB4-38	4-1-68 ⚠1

PAINT
LACLEDE ... PRIMER
RED NO. ...

TRUSS DESIGNATION	TOP CHORD TWO ANGLES				BOTTOM CHORD TWO ANGLES				MAIN WEB "W"					VERTICAL "EST" STRUT					TRUSS DATA	FILLER	
	MK	TYPE STEEL	SIZE	LENGTH	MK	TYPE STEEL	SIZE	LENGTH	MK	TYPE STEEL	DIA	LENGTH	PANEL	MK	TYPE STEEL	DIA	LENGTH	NUMBER REQUIRED		NO.	DIA.
24T11A-1911	6	A242	1"x1"x.230	19'-11"	7	A242	1"x1"x.230	19'-11"	3	A242	.75	25'-7½" ⚠3	5K · 3'-4" = 16'-8"	12	A242	.75	1'-10⅞" ⚠2	2		—	—

Es END TRUSS DESIGNATION	WE	INCLINED "ST" STRUT MK	TYPE STEEL	DIA	LENGTH	WEB Wc MK	TYPE STEEL	PCS	DIA	LENGTH
24T11A-1911	1'-6½"	2	A242	.75	1'-11¾"	4	A242	1	.75	2'-5½"

EL END TRUSS DESIGNATION	BEARING ANGLES MK	TYPE STEEL	CHORD SIZE	LENGTH	WEL	DIAGONAL "TL" STRUT MK	TYPE STEEL	DIA	LENGTH	INCLINED "STL" STRUT MK	TYPE STEEL	DIA	LENGTH	END STIFFENER MK V5 TYPE STEEL	DIA	LENGTH	MK V6 TYPE STEEL	DIA	LENGTH	WEB "WcL" MK	TYPE STEEL	PCS	DIA	LENGTH
24T11A-1911	-	—	—	—	1'-6½	—	—	—	—	2	A242	.75	1'-11¾"	—	—	—	—	—	—	4	A242	1	.75	2'-5½"

NO.	DATE	REVISION	BY
⚠5	7-27-68	END DIST ②	T.M.C.
⚠4	7-8-68	AS NOTED	T.M.C.
⚠3	7-3-68	MAIN WEB	T.M.C.
⚠2	6-26-68	LENGTH OF "EST." REF. DWG.	T.M.C.
⚠1	4-25-68	END STRUT DIMENSIONS	T.M.C.

BRIDGING TRUSS DETAILS
FOR
WORLD TRADE CENTER - N.Y.C.
FOR
THE PORT OF NEW YORK AUTHORITY

BRIDGING TRUSS 24T11A x 19'-11" LONG
WORLD TRADE CENTER TOWERS A-B

FABRICATION BY LACLEDE STEEL COMPANY
FABRICATED AT MADISON, ILLINOIS
DESIGN DRAWING NO. 7-AB2-6 PLATE
APPROVED FOR FABRICATION BY [signature] FOR PONYA DATE 8/2/68
DRAWN BY ... DATE FEB 24, 1968
APPROVED FOR FABRICATION BY ____ FOR FABRICATOR DATE
CHECKED BY J.R. PAUL DATE FEB 24, 1968
IN CHARGE OF PROD. ...
DETAILED BY A.C. WEBER
FABRICATION CONT. NO. ... 221
SHEET NO. BT211A

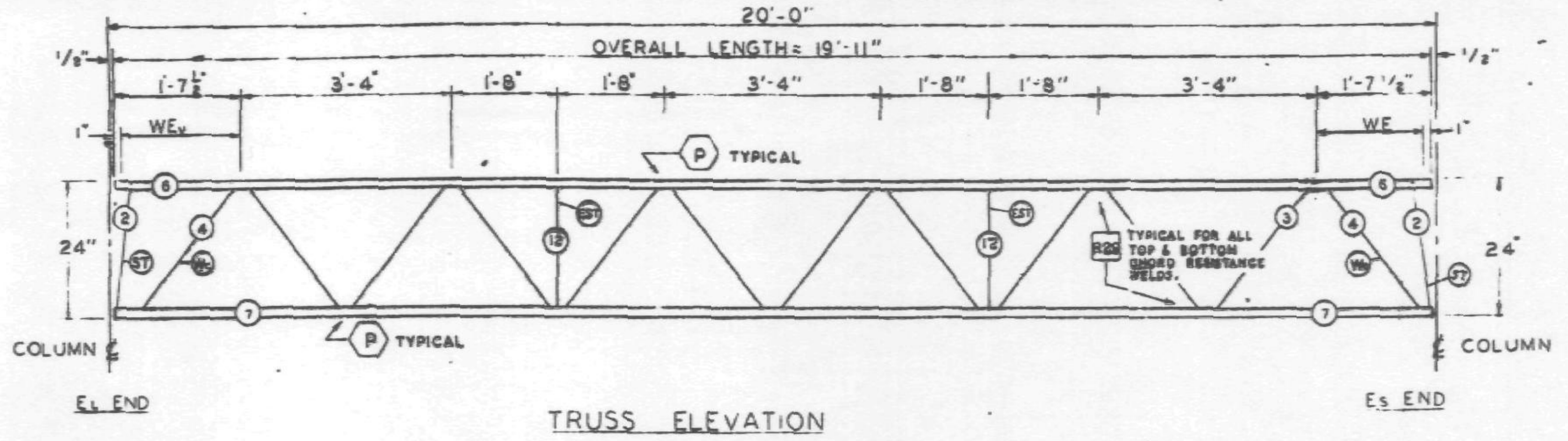

TRUSS ELEVATION

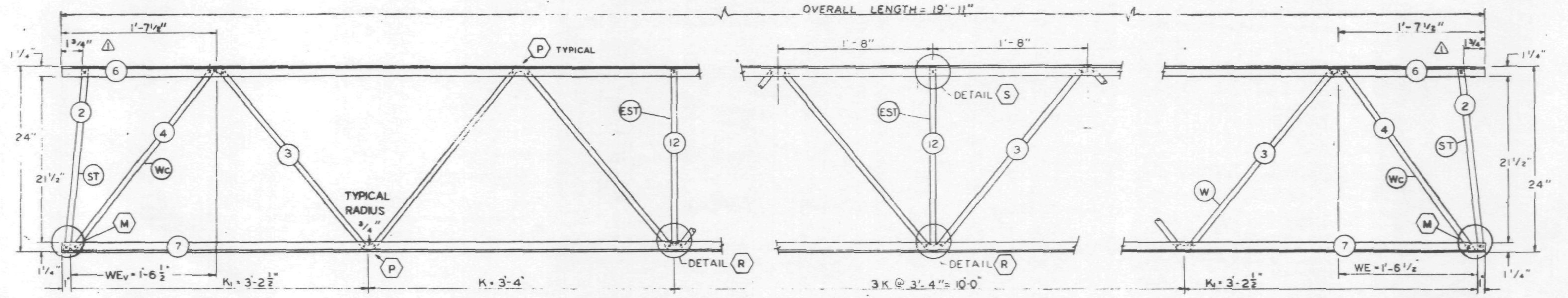

ELEVATION AT EL END

ELEVATION AT ADDED STRUT

ELEVATION AT ES END

FABRICATION REQUIRMENTS		
	DESIGN	TOLERANCE
CAMBER AT MIDSPAN	0"	+ 3/8"
DESIGN DEPTH	24"	± 1/4"
PANEL "K"	3'-4"	± 1/4"
PANEL "K1"	3'-2 1/2"	± 1/4"
WEB DEPTH	23 1/2"	± 1/4"
OVERALL LENGTH	19'-11"	± 3/8"

ALL PANEL POINTS RESISTANCE WELDED (X). ARC WELDS INDICATED AT SHADED AREAS AND AT BOTTOM CHORD WEB SPLICES. ALL WELD DETAILS SHOWN ON SHEETS ST290 AND ST291.
LETTERS IN HEXAGON INDICATE WELD DETAIL, ie., (A).
LETTERS AND NUMBERS IN SQUARES INDICATE RESISTANCE WELD STRENGTH IDENTIFIED IN THE QUALITY CONTROL PROGRAM, ie., R29.

REF. DWG.
7-AB2-1 — 2-15-68
7-AB2-6 — 2-15-68
7-AB4-15.1 — 10-27-67
7-AB4-16,18 & 19 — 1-3-68
7-AB4-28, 38 & 41 — 1-3-68

PAINT
LACLEDE ELECTROCOAT
RED NO 10001

TRUSS DESIGNATION	TOP CHORD TWO ANGLES				BOTTOM CHORD TWO ANGLES				MAIN WEB "W"					VERTICAL "EST" STRUT					TRUSS DATA		FILLER	
	MK	TYPE STEEL	CHORD SIZE	LENGTH	MK	TYPE STEEL	CHORD SIZE	LENGTH	MK	TYPE STEEL	DIA	LENGTH	NO OF K	MK	TYPE STEEL	DIA	LENGTH	NUMBER REQUIRED			NO.	DIA.
24T11A-1911	6	A242	1 1/2" x 1 1/4" x .230	19'-11"	7	A242	1 1/2" x 1 1/4 x .230"	19'-11"	3	A242	.75	30'-6 1/2"	5K @ 3'-4" = 16'-8"	12	A242	.75	1'-10 1/8"	2			—	—

ES END	TRUSS DESIGNATION	WE	INCLINED "ST" STRUT				WEB "WC"				
			MK	TYPE STEEL	DIA	LENGTH	MK	TYPE STEEL	PCS	DIA	LENGTH
	24T11A-1911	1'-6 1/2"	2	A242	.75	1'-11 3/4"	4	A242	1	.75	2'-5 1/2"

EL END	TRUSS DESIGNATION	BEARING ANGLES				WEV	DIAGONAL "T" STRUT				INCLINED "ST" STRUT				END STIFFENER						WEB "WC"				
															MK V5			MK V6							
		MK	TYPE STEEL	CHORD SIZE	LENGTH		MK.	TYPE STEEL	DIA	LENGTH	MK	TYPE STEEL	DIA	LENGTH	TYPE STEEL	DIA	LENGTH	TYPE STEEL	DIA	LENGTH	MK	TYPE STEEL	PCS	DIA	LENGTH
	24T11A-1911	—	—	—	—	1'-6 1/2"	—	—	—	—	2	A242	.75	1'-11 3/4"	—	—	—	—	—	—	4	A242	1	.75	2'-5 1/2"

NO.	DATE	REVISION	BY
1	4-25-68	END STRUT DIMENSIONS	T.M.C.

BRIDGING TRUSS DETAILS
FOR
WORLD TRADE CENTER - N.Y.C.
FOR
THE PORT OF NEW YORK AUTHORITY

BRIDGING TRUSS 24T11A x 19'-11" LONG
WORLD TRADE CENTER TOWERS A-B

FABRICATION BY LACLEDE STEEL COMPANY
FABRICATED AT MADISON, ILLINOIS
DESIGN DRAWING NO. 7-AB2-6 PLATE
APPROVED FOR FABRICATION BY James White FOR PONYA DATE 5/1/68
DRAWN BY: [illegible] DATE FEB 24, 1968
APPROVED FOR FABRICATION BY FOR FABRICATOR DATE
CHECKED BY: J.R. PAUL DATE FEB 24, 1968
IN CHARGE OF PROD DEV
LACLEDE STEEL CO.
DETAILED BY A.C. WEBER
FABRICATION CONT. NO. W.T.C. 221
SHEET NO BT211A

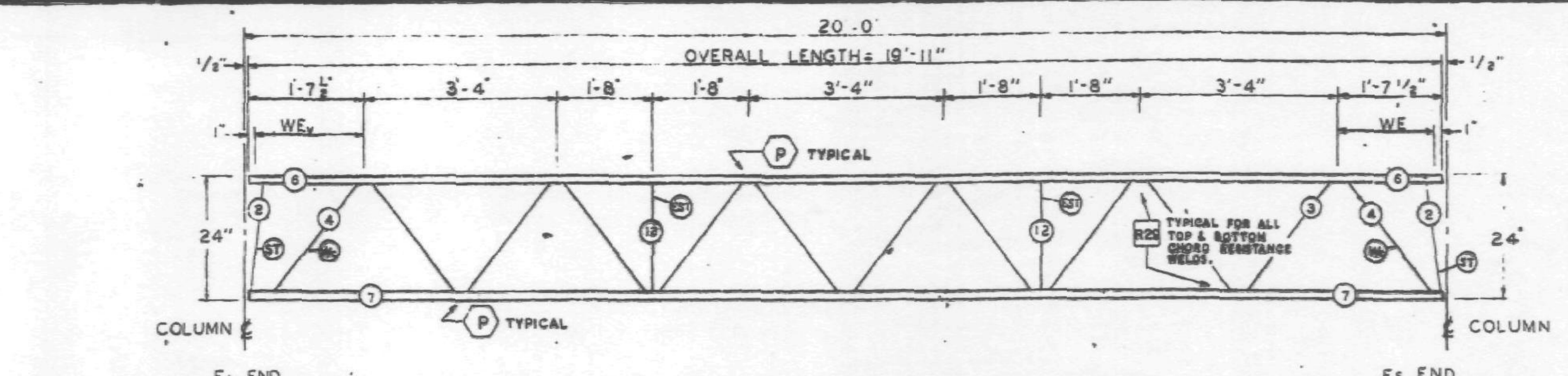

EL END Es END

TRUSS ELEVATION

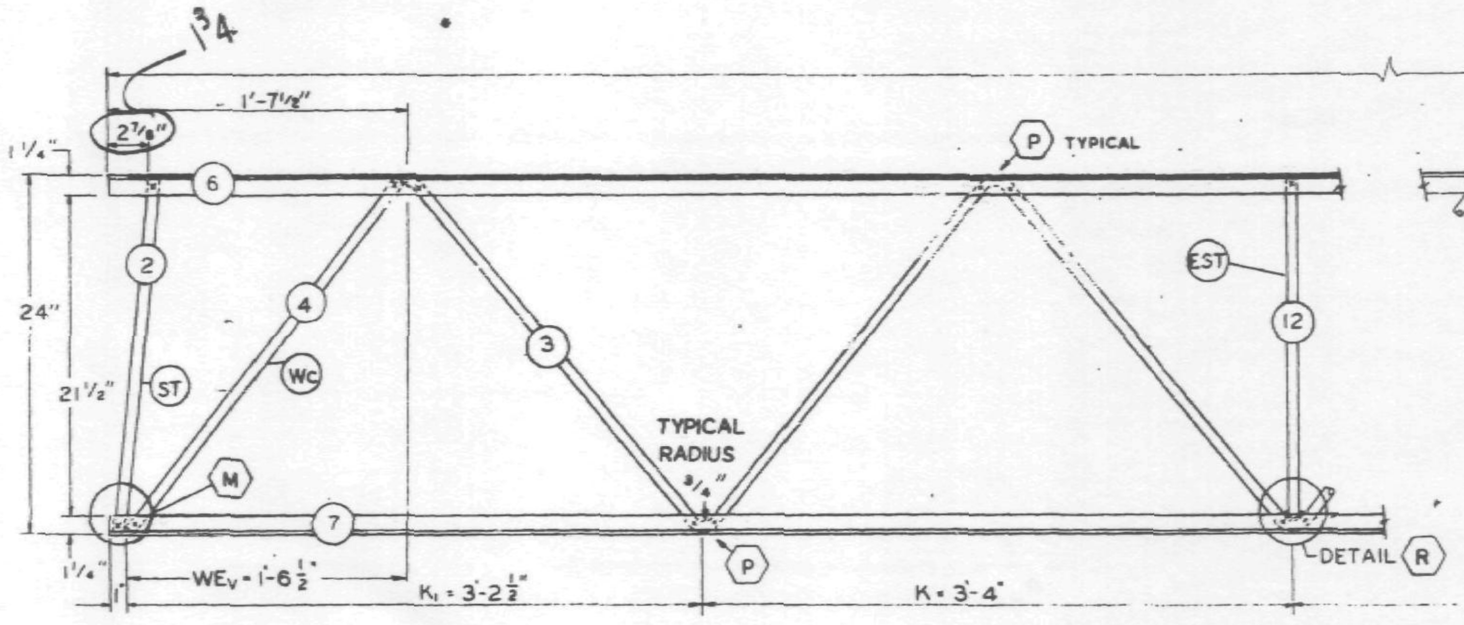

ELEVATION AT EL END

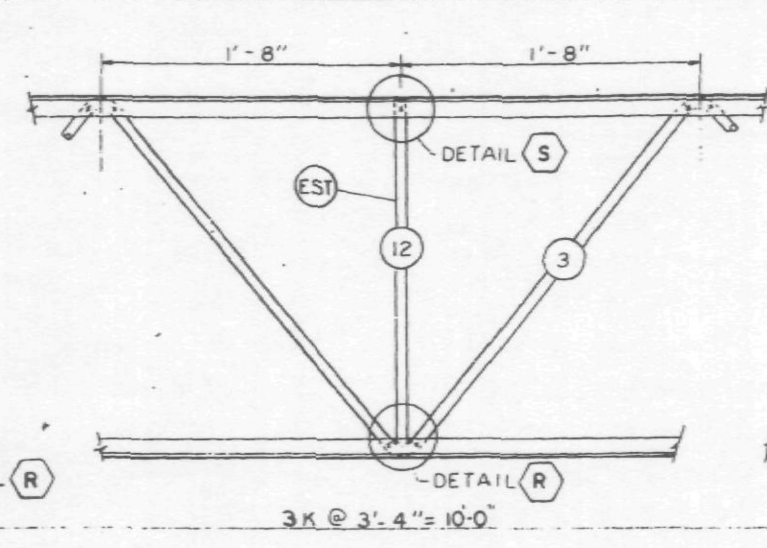

ELEVATION AT ADDED STRUT

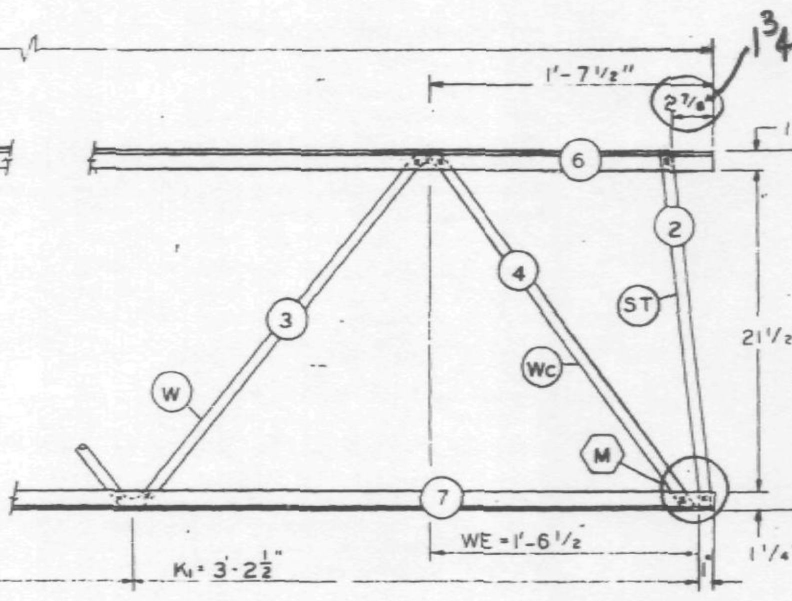

ELEVATION AT Es END

FABRICATION REQUIRMENTS		
	DESIGN	TOLERANCE
CAMBER AT MIDSPAN	0"	+ 3/8"
DESIGN DEPTH	24"	± 1/4"
PANEL "K"	3'-4"	± 1/4"
PANEL "K1"	3'-2 1/2"	± 1/4"
WEB DEPTH	23 7/8"	± [illegible]
OVERALL LENGTH	19'-11"	± [illegible]

ALL PANEL POINTS RESISTANCE WELDED (X).
ARC WELDS INDICATED AT SHADED AREAS AND AT BOTTOM CHORD WEB SPLICES.
ALL WELD DETAILS SHOWN ON SHEETS ST290 AND ST291.
LETTERS IN HEXAGON INDICATE WELD DETAIL, i.e., (A).
LETTERS AND NUMBERS IN SQUARES INDICATE RESISTANCE WELD STRENGTH IDENTIFIED IN THE QUALITY CONTROL PROGRAM, i.e., [R29].

REF. DWG.	
7-AB2-1	2-15-68
7-AB2-6	2-15-68
7-AB4-15.1	10-27-67
7-AB4-16,18 & 19	1-3-68
7-AB4-28,38 & 41	1-3-68

PAINT
LACLEDE ELECTROCOAT
RED NO 10001

TRUSS DESIGNATION	TOP CHORD TWO ANGLES				BOTTOM CHORD TWO ANGLES				MAIN WEB "W"					VERTICAL "EST" STRUT					TRUSS DATA		FILLER	
	MK	TYPE STEEL	CHORD SIZE	LENGTH	MK.	TYPE STEEL	CHORD SIZE	LENGTH	MK	TYPE STEEL	DIA	LENGTH	NO OF K	MK	TYPE STEEL	DIA	LENGTH	NUMBER REQUIRED			NO.	DIA.
24T11A-1911	6	A242	1 1/2"x1 1/4"x.230"	19'-11"	7	A242	1 1/2"x1 1/4"x.230"	19'-11"	3	A242	.75	30'-6 1/2"	5K @ 3'-4" = 16'-8"	12	A242	.75	1'-10 1/8"	2			—	—

Es END	TRUSS DESIGNATION	WE	INCLINED "ST" STRUT				WEB "Wc"				
			MK	TYPE STEEL	DIA	LENGTH	MK	TYPE STEEL	PCS	DIA	LENGTH
	24T11A-1911	1'-6 1/2"	2	A242	.75	1'-11 3/4"	4	A242	1	.75	2'-5 1/2"

EL END	TRUSS DESIGNATION	BEARING ANGLES				WEV	DIAGONAL "T" STRUT				INCLINED "ST" STRUT				END STIFFENER MK VS			END STIFFENER MK V6			WEB "Wc"				
		MK	TYPE STEEL	CHORD SIZE	LENGTH		MK	TYPE STEEL	DIA	LENGTH	MK	TYPE STEEL	DIA	LENGTH	TYPE STEEL	DIA	LENGTH	TYPE STEEL	DIA	LENGTH	MK	TYPE STEEL	PCS	DIA	LENGTH
	24T11A-1911	—	—	—	—	1'-6 1/2"	—	—	—	—	2	A242	.75	1'-11 1/2"	—	—	—	—	—	—	4	A242	1	.75	2'-5 1/2"

SKILLING, HELLE, CHRISTIANSEN, ROBERTSON
Structural & Civil Engineers
4/24/68 SK

BRIDGING TRUSS DETAILS
FOR
WORLD TRADE CENTER - N.Y.C.
FOR
THE PORT OF NEW YORK AUTHORITY

BRIDGING TRUSS 24T11A x 19'-11" LONG
WORLD TRADE CENTER TOWERS A-B

FABRICATION BY LACLEDE STEEL COMPANY

FABRICATED AT MADISON, ILLINOIS	DESIGN DRAWING NO. 7-AB2-6 PLATE
APPROVED FOR FABRICATION BY ____ FOR P.O.N.Y.A. DATE	DRAWN BY: [illegible] DATE FEB 24, 1968
APPROVED FOR FABRICATION BY ____ FOR FABRICATOR DATE	CHECKED BY: J.R. PAUL DATE FEB 24, 1968 — IN CHARGE OF PROD. DEV.
LACLEDE STEEL CO. DETAILED BY A.C. WEBER	FABRICATION CONT. NO. WTC 221 — SHEET NO. BT211A

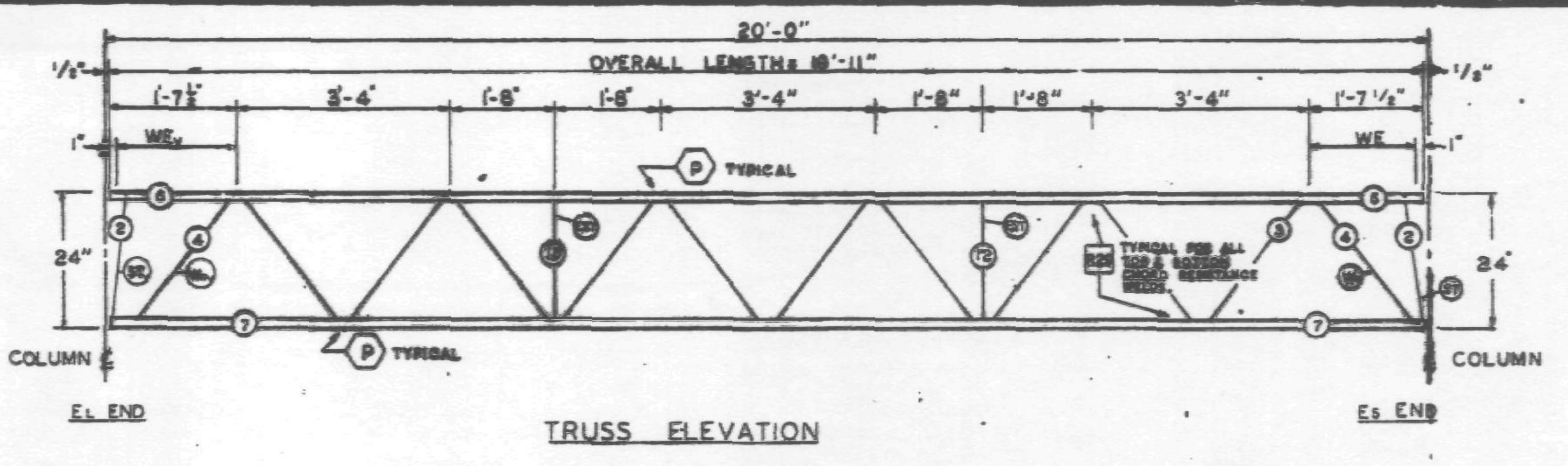

TRUSS ELEVATION

FABRICATION REQUIRMENTS		
	DESIGN	TOLERANCE
CAMBER AT MIDSPAN	0"	± 1/8"
DESIGN DEPTH	24"	± 1/4"
PANEL "K"	3'-4"	± 1/2"
PANEL "K1"	3'-2 1/2"	± 1/2"
WEB DEPTH	23 1/2"	± 1/4"
OVERALL LENGTH	19'-11"	± 1/8"

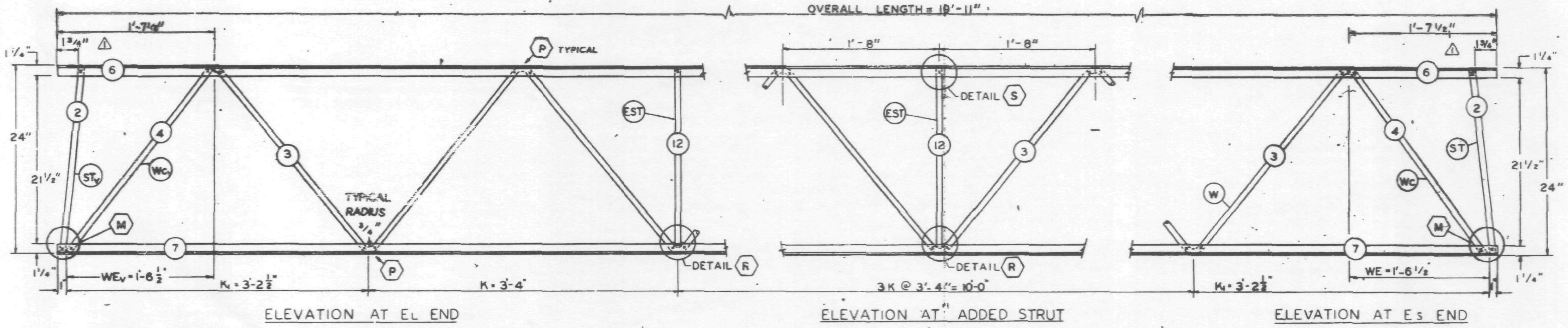

ALL PANEL POINTS RESISTANCE WELDED (X).
ARC WELDS INDICATED AT SHADED AREAS AND AT BOTTOM CHORD WEB SPLICES.
ALL WELD DETAILS SHOWN ON SHEETS ST290 AND ST291.
LETTERS IN HEXAGON INDICATE WELD DETAIL, ie., (A).
LETTERS AND NUMBERS IN SQUARES INDICATE RESISTANCE WELD STRENGTH IDENTIFIED IN THE QUALITY CONTROL PROGRAM, ie., R29.

REF. DWG.

7-AB2-1	4-1-68	2
7-AB2-6	2-15-68	
7-AB4-13,1,18	1-3-68	2
7-AB4-16,18	5-6-68	2
7-AB4-28,41	1-3-68	2
7-AB4-38	4-1-68	2

PAINT
LACLEDE ELECTROCOAT
RED NO 10001

TRUSS DESIGNATION	TOP CHORD TWO ANGLES				BOTTOM CHORD TWO ANGLES				MAIN WEB "W"					VERTICAL "EST" STRUT					TRUSS DATA		FILLER	
	MK.	TYPE STEEL	CHORD SIZE	LENGTH	MK.	TYPE STEEL	CHORD SIZE	LENGTH	MK.	TYPE STEEL	DIA.	LENGTH	NO. OF K.	MK.	TYPE STEEL	DIA	LENGTH	NUMBER REQUIRED			NO.	DIA.
24T11A-1911	6	A242	1 1/2" x 1 1/4" x .230"	19'-11"	7	A242	1 1/2" x 1 1/4" x .230"	19'-11"	3	A242	.75	25'-7 1/2" (3)	5K @ 3'-4" = 16'-8"	12	A242	.75	1'-10 7/8" (2)	2			—	—

ES END	TRUSS DESIGNATION	WE	INCLINED "ST" STRUT				WEB "Wc"				
			MK.	TYPE STEEL	DIA.	LENGTH	MK.	TYPE STEEL	PCS	DIA	LENGTH
	24T11A-1911	1'-6 1/2"	2	A242	.75	1'-11 3/4"	4	A242	1	.75	2'-5 1/2"

EL END	TRUSS DESIGNATION	BEARING ANGLES				WEv	DIAGONAL "Tv" STRUT				INCLINED "STv" STRUT				END STIFFENER MK V5			END STIFFENER MK V6			WEB "Wcv"				
		MK.	TYPE STEEL	CHORD SIZE	LENGTH		MK.	TYPE STEEL	DIA.	LENGTH	MK.	TYPE STEEL	DIA.	LENGTH	TYPE STEEL	DIA.	LENGTH	TYPE STEEL	DIA.	LENGTH	MK.	TYPE STEEL	PCS	DIA.	LENGTH
	24T11A-1911	—	—	—	—	1'-6 1/2"	—	—	—	—	2	A242	.75	1'-11 1/2"	—	—	—	—	—	—	4	A242	1	.75	2'-5 1/2"

NO.	DATE	REVISION	
3	7-3-68	MAIN WEB	T.M.C.
2	6-28-68	LENGTH OF "EST," REF. DWG.	T.M.C.
1	4-25-68	END STRUT DIMENSIONS	T.M.C.

VOID

BRIDGING TRUSS DETAILS
FOR
WORLD TRADE CENTER - N.Y.C.
FOR
THE PORT OF NEW YORK AUTHORITY

BRIDGING TRUSS 24T11A x 19'-11" LONG
WORLD TRADE CENTER TOWERS A-B

FABRICATION BY: LACLEDE STEEL COMPANY

FABRICATED AT: MADISON, ILLINOIS		DESIGN DRAWING NO. 7-AB2-6	PLATE
APPROVED FOR FABRICATION BY: FOR "P.O.N.Y.A.	DATE	DRAWN BY: DATE: FEB 24, 1968	
APPROVED FOR FABRICATION BY FOR FABRICATOR	DATE	CHECKED BY: I.R.PAUL DATE: FEB 24, 1968	IN CHARGE OF PROD. DEV.
DETAILED BY: A.C. WEBER		FABRICATION CONT. NO. W.T.C. 221	SHEET NO. ST211A

FABRICATION REQUIREMENTS	DESIGN	TOLERANCE
CAMBER AT MIDSPAN	0"	[illegible]
DESIGN DEPTH	24"	[illegible]
PANEL "K"	3'-4"	[illegible]
PANEL "K1"	3'-2½"	[illegible]
WEB DEPTH	23[illegible]"	[illegible]
OVERALL LENGTH	19'-11"	[illegible]

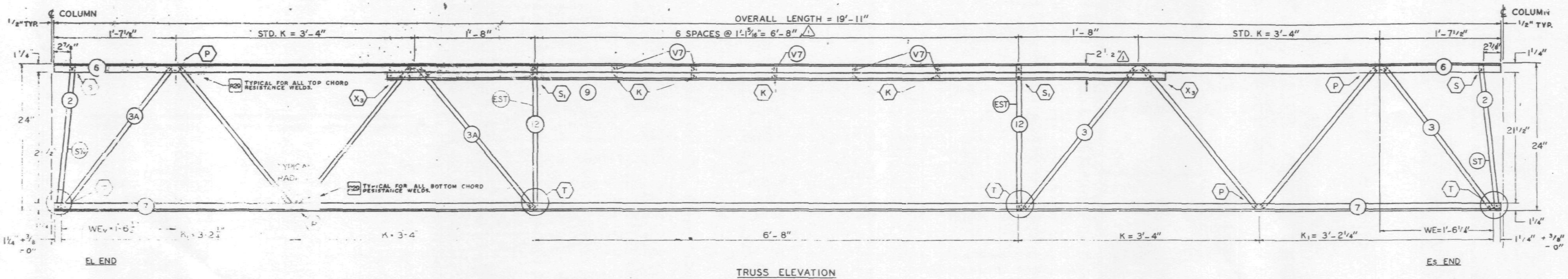

TRUSS ELEVATION

ALL PANEL POINTS RESISTANCE WELDED. (X).
ARC WELDS INDICATED AT SHADED AREAS AND AT BOTTOM CHORD WEB SPLICES. (IIIIIIII).
ALL WELD DETAILS SHOWN ON SHEETS ST 290, ST 291, AND ST 292.
LETTERS IN HEXAGON INDICATE WELD DETAIL. ie., (P).
LETTERS AND NUMBERS IN SQUARES INDICATE RESISTANCE STRENGTH IDENTIFIED IN THE QUALITY CONTROL PROGRAM. ie., R29.

REF. DWG.	
7-AB2-1	10-4-68
7-AB2-15	10-4-68
7-AB4-15.1	10-4-68
7-AB4-5.3	7-22-68
7-AB4-28 & 41	7-22-68
7-AB4-18 & 19	10-15-68

PAINT
LACLEDE ELECTROCOAT
REF. NO. [illegible]

TRUSS DESIGNATION	TOP CHORD TWO ANGLES				BOTTOM CHORD TWO ANGLES				MAIN WEB "W"					VERTICAL "EST" STRUT					TRUSS DATA	FILLER		BEARING ANGLES				SPECIAL FILLER △				
	MK.	TYPE STEEL	CHORD SIZE	LENGTH	MK.	TYPE STEEL	CHORD SIZE	LENGTH	MK.	TYPE STEEL	DIA.	LENGTH	[illegible]	MK.	TYPE STEEL	DIA.	LENGTH	[illegible]		NO.	DIA.	MK.	TYPE STEEL	CHORD SIZE	LENGTH	MK.	TYPE STEEL	DIA.	PCS.	LENGTH
24T11B-1911	6	A242	1½ x 1¼ x .230	19'-11"	7	A242	1½ x 1¼ x .230	19'-11"	3	A242	.75	10'-1½"	2K@3'-4" = 6'-8"	12	A242	.75	1'-11⅞"	2		—	—	9	A242	1½" x 1¼" x .23"	10'-10"	V7	A242	.75	5	2⅜"
									3A	A242	.75	10'-1½"	2K@3'-4" = 6'-8"																	

Es END	TRUSS DESIGNATION	WE	INCLINED "ST" STRUT				WEB "Wc"				
			MK.	TYPE STEEL	DIA.	LENGTH	MK.	TYPE STEEL	PCS.	DIA.	LENGTH
	24T11B-1911	1'-6¼"	2	A242	.75	1'-11¾"	—	—	—	—	—

EL END	TRUSS DESIGNATION	BEARING ANGLES				WE1	DIAGONAL "T" STRUT				INCLINED "ST1" STRUT				END STIFFENER MK. V5			END STIFFENER MK. V6			WEB "Wc"				
		MK.	TYPE STEEL	CHORD SIZE	LENGTH		MK.	TYPE STEEL	DIA.	LENGTH	MK.	TYPE STEEL	DIA.	LENGTH	TYPE STEEL	DIA.	LENGTH	TYPE STEEL	DIA.	LENGTH	MK.	TYPE STEEL	PCS.	DIA.	LENGTH
	24T11B-1911	—	—	—	—	1'-6¼"	—	—	—	—	2	A242	.75	1'-11¾"	—	—	—	—	—	—	—	—	—	—	—

NO.	DATE	REVISION	BY
△1	11-12-68	SPECIAL FILLER	L.W.H.

BRIDGING TRUSS DETAILS
FOR
WORLD TRADE CENTER – N.Y.C.
FOR
THE PORT OF NEW YORK AUTHORITY

BRIDGING TRUSS 24T11B x 19'-11" LONG
WORLD TRADE CENTER TOWERS A-B

FABRICATION BY LACLEDE STEEL COMPANY
FABRICATED AT MADISON, ILLINOIS
DESIGN DRAWING NO. 7-AB2-15
PLATE
APPROVED FOR FABRICATION BY [signature] FOR PONYA — DATE 11/18/68
DRAWN BY [initials] DATE OCT. 29, 1968
APPROVED FOR FABRICATION BY FOR FABRICATOR — DATE
CHECKED BY T. M. CHURA DATE OCT. 29, 1968
IN CHARGE OF PROD. DEV.
DETAILED BY A. C. WEBER
FABRICATION CONT. NO. WTC 221
SHEET NO. BT 211 B

FABRICATION REQUIRMENTS

	DESIGN	TOLERANCE
CAMBER AT MIDSPAN	0"	[illegible]
DESIGN DEPTH	24"	± 1/4"
PANEL "K"	3'-4"	± 1/4"
PANEL "K1"	3'-2 1/2"	± 1/4"
WEB DEPTH	23 7/8"	± 1/4"
OVERALL LENGTH	19'-11"	± 1/8"

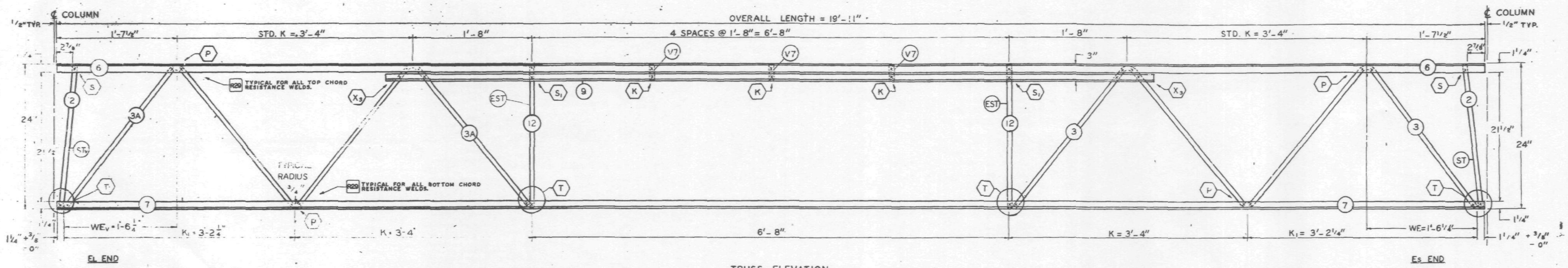

TRUSS ELEVATION

ALL PANEL POINTS RESISTANCE WELDED. (X).
ARC WELDS INDICATED AT SHADED AREAS AND AT BOTTOM CHORD WEB SPLICES. (IIIIIII).
ALL WELD DETAILS SHOWN ON SHEETS ST 290, ST 291, AND ST 292.
LETTERS IN HEXAGON INDICATE WELD DETAIL. ie., (P).
LETTERS AND NUMBERS IN SQUARES INDICATE RESISTANCE STRENGTH IDENTIFIED IN THE QUALITY CONTROL PROGRAM. ie., [R29].

REF DWG.	
7-AB2-1	10-4-68
7-AB2-15	10-4-68
7-AB4-15.1	10-4-68
7-AB4-16.18	7-22-68
7-AB4-28 & 41	7-22-68
7-AB4-38 & 19	10-15-68

PAINT
LACLEDE ELECTROCOAT
RED NO 10001

SKILLING - HELLE CHRISTIANSEN - ROBERTSON
Structural & Civil Engineers
X ... AS NOTED
11/7/68 SK

TRUSS DESIGNATION	TOP CHORD TWO ANGLES MK.	TOP CHORD TYPE STEEL	TOP CHORD CHORD SIZE	TOP CHORD LENGTH	BOTTOM CHORD TWO ANGLES MK.	BOTTOM CHORD TYPE STEEL	BOTTOM CHORD CHORD SIZE	BOTTOM CHORD LENGTH	MAIN WEB "W" MK.	MAIN WEB TYPE STEEL	MAIN WEB DIA	MAIN WEB LENGTH	MAIN WEB NO. OF K	VERTICAL "EST" STRUT MK.	VERTICAL TYPE STEEL	VERTICAL DIA	VERTICAL LENGTH	VERTICAL NUMBER REQUIRED	TRUSS DATA		FILLER NO.	FILLER DIA.	BEARING ANGLES MK.	BEARING TYPE STEEL	BEARING CHORD SIZE	BEARING LENGTH	SPECIAL FILLER MK.	SPECIAL FILLER TYPE STEEL	SPECIAL FILLER DIA.	SPECIAL FILLER PCS.	SPECIAL FILLER LENGTH
24T11B-1911	6	A242	1 1/2"x1 1/4"x.230"	19'-11"	7	A242	1 1/2"x1 1/4"x.230"	19'-11"	3 3A	A242 A242	.75 .75	10'-1 1/2" 10'-1 1/2"	2K@3'-4"=6'-8" 2K@3'-4"=6'-8"	12	A242	.75	1'-11 7/8"	2			—	—	9	A242	1 1/2"x1 1/4"x.23"	10'-10"	V7	A242	.75	3 (C10)	2 7/8"

E_S END TRUSS DESIGNATION	WE	INCLINED "ST" STRUT MK	TYPE STEEL	DIA	LENGTH	WEB "Wc" MK	TYPE STEEL	PCS	DIA	LENGTH
24T11B-1911	1'-6 1/4"	2	A242	.75	1'-11 3/4"	—	—	—	—	—

E_L END TRUSS DESIGNATION	BEARING ANGLES MK.	TYPE STEEL	CHORD SIZE	LENGTH	WE_L	DIAGONAL "T" STRUT MK.	TYPE STEEL	DIA.	LENGTH	INCLINED "ST_L" STRUT MK	TYPE STEEL	DIA.	LENGTH	END STIFFENER MK V5 TYPE STEEL	MK V5 DIA.	MK V5 LENGTH	MK V6 TYPE STEEL	MK V6 DIA.	MK V6 LENGTH	WEB "Wc_L" MK	TYPE STEEL	PCS	DIA	LENGTH
24T11B-1911	—	—	—	—	1'-6 1/4"	—	—	—	—	2	A242	.75	1'-11 3/4"	—	—	—	—	—	—	—	—	—	—	—

NO	DATE	REVISION	BY

BRIDGING TRUSS DETAILS
FOR
WORLD TRADE CENTER - N.Y.C.
FOR
THE PORT OF NEW YORK AUTHORITY

BRIDGING TRUSS 24T11B x 19'-11" LONG
WORLD TRADE CENTER TOWERS A-B

FABRICATION BY LACLEDE STEEL COMPANY
FABRICATED AT MADISON, ILLINOIS
DESIGN DRAWING NO. 7-AB2-15 PLATE
APPROVED FOR FABRICATION BY ______ FOR P.O.N.Y.A DATE
DRAWN BY: [illegible] DATE OCT. 29, 1968
APPROVED FOR FABRICATION BY ______ FOR FABRICATOR DATE
CHECKED BY T. M. CHURA DATE OCT. 29, 1968
IN CHARGE OF PROD. DEV.
DETAILED BY A. C. WEBER — LACLEDE STEEL CO.
FABRICATION CONT. NO. 221
SHEET NO. BT 211 B

FABRICATION REQUIRMENTS	DESIGN	TOLERANCE
CAMBER AT MIDSPAN	0"	± 1/8"
DESIGN DEPTH	24"	± 1/8"
PANEL "K"	3'-4"	± 1/8"
PANEL "K1"	3'-2 1/2"	± 1/8"
WEB DEPTH	23 7/8"	± 1/4"
OVERALL LENGTH	19'-11"	± 1/8"

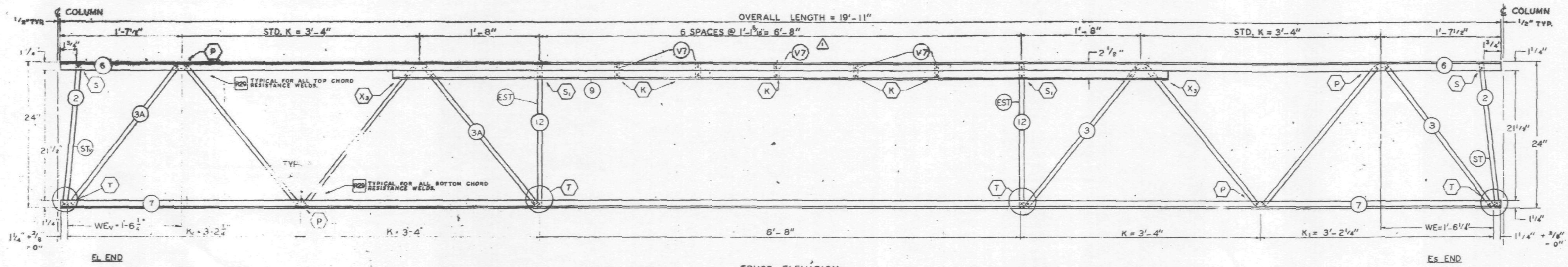

TRUSS ELEVATION

ALL PANEL POINTS RESISTANCE WELDED (X).
ARC WELDS INDICATED AT SHADED AREAS AND AT BOTTOM CHORD WEB SPLICES.
ALL WELD DETAILS SHOWN ON SHEETS ST 290, ST 291, AND ST 292.
LETTERS IN HEXAGON INDICATE WELD DETAIL. i.e. (P).
LETTERS AND NUMBERS IN SQUARES INDICATE RESISTANCE STRENGTH IDENTIFIED IN THE QUALITY CONTROL PROGRAM. i.e. [R29].

REF. DWG	
7-AB2-1	10-4-68
7-AB2-15	10-4-68
7-AB4-15.1	10-4-68
7-AB4-16.18	7-22-68
7-AB4-28 & 41	7-22-68
7-AB4-18 & 19	10-15-68

PAINT
LACLEDE ELECTROCOAT
REF. NO. 10301

TRUSS DESIGNATION	TOP CHORD TWO ANGLES				BOTTOM CHORD TWO ANGLES				MAIN WEB "W"					VERTICAL "EST" STRUT				
	MK	TYPE STEEL	CHORD SIZE	LENGTH	MK	TYPE STEEL	CHORD SIZE	LENGTH	MK	TYPE STEEL	DIA	LENGTH	NO. OF K	MK	TYPE STEEL	DIA	LENGTH	NUMBER REQUIRED
24T11C-1911	6	A242	1 1/2"x1 1/4"x 230	19'-11"	7	A242	1 1/2"x1 1/4"x 230	19'-11"	3	A242	.75	10'-1 1/2"	2K@3'-4"=6'-8"	12	A242	.75	1'-11 7/8"	2
									3A	A242	.75	10'-1 1/2"	2K@3'-4"=6'-8"					

TRUSS DESIGNATION	TRUSS DATA		FILLER		BEARING ANGLES				SPECIAL FILLER ⚠1				
			NO.	DIA.	MK.	TYPE STEEL	CHORD SIZE	LENGTH	MK.	TYPE STEEL	DIA.	PCS.	LENGTH
24T11C-1911			—	—	9	A242	1 1/2"x1 1/2"x 23"	10'-10"	V7	A242	.75	3	2 3/8"

Es END TRUSS DESIGNATION	WE	INCLINED "ST" STRUT				WEB "Wc"				
		MK	TYPE STEEL	DIA	LENGTH	MK	TYPE STEEL	PCS	DIA	LENGTH
24T11C-1911	1'-6 1/4"	2	A242	.75	1'-11 7/8"	—	—	—	—	—

EL END TRUSS DESIGNATION	BEARING ANGLES				WEL	DIAGONAL "T" STRUT				INCLINED "ST" STRUT			
	MK	TYPE STEEL	CHORD SIZE	LENGTH		MK	TYPE STEEL	DIA	LENGTH	MK	TYPE STEEL	DIA	LENGTH
24T11C-1911	—	—	—	—	1'-6 1/4"	—	—	—	—	2	A242	.75	1'-11 7/8"

EL END TRUSS DESIGNATION	END STIFFENER MK V5			END STIFFENER MK V6			WEB "Wc"				
	TYPE STEEL	DIA	LENGTH	TYPE STEEL	DIA	LENGTH	MK	TYPE STEEL	PCS	DIA	LENGTH
24T11C-1911	—	—	—	—	—	—	—	—	—	—	—

NO.	DATE	REVISION	BY
⚠1	11-12-68	SPECIAL FILLERS	LWH

BRIDGING TRUSS DETAILS
FOR
WORLD TRADE CENTER - N/C
FOR
THE PORT OF NEW YORK AUTHORITY

BRIDGING TRUSS 24T11C x 19'-11" LONG
WORLD TRADE CENTER TOWERS A-B

FABRICATION BY LACLEDE STEEL COMPANY
FABRICATED AT MADISON, ILLINOIS
DESIGN DRAWING NO. 7-AB2-15
PLATE
APPROVED FOR FABRICATION FOR P.O.N.Y.A. James White DATE 11/18/68
DRAWN BY [illegible] DATE OCT. 29, 1968
APPROVED FOR FABRICATION BY FOR FABRICATOR DATE
CHECKED BY T. M. CHUBB DATE OCT. 29, 1968
IN CHARGE OF PROD. DIV.
DETAILED BY LACLEDE STEEL CO.
FABRICATION CONT. NO. W.T.C. 221
SHEET NO. BT 211C

FABRICATION REQUIRMENTS		
	DESIGN	TOLERANCE
CAMBER AT MIDSPAN	0"	[illegible]
DESIGN DEPTH	24"	± 1/4"
PANEL "K"	3'-4"	± 1/4"
PANEL "K₁"	3'-2 1/2"	± [illegible]
WEB DEPTH	23 1/8"	± 1/4"
OVERALL LENGTH	19'-11"	± 1/8"

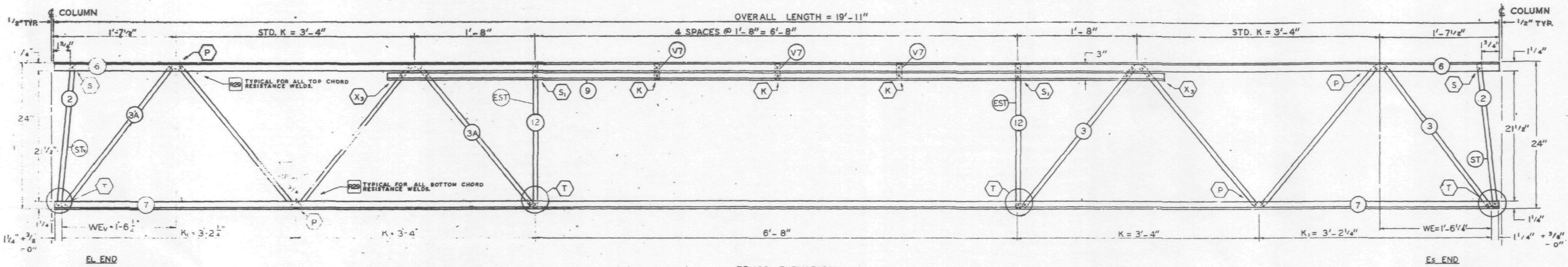

TRUSS ELEVATION

ALL PANEL POINTS RESISTANCE WELDED. (X).
ARC WELDS INDICATED AT SHADED AREAS AND AT BOTTOM CHORD WEB SPLICES. (////).
ALL WELD DETAILS SHOWN ON SHEETS ST 290, ST 291, AND ST 292.
LETTERS IN HEXAGON INDICATE WELD DETAIL. ie., (P).
LETTERS AND NUMBERS IN SQUARES INDICATE RESISTANCE STRENGTH IDENTIFIED IN THE QUALITY CONTROL PROGRAM. ie., R29.

REF. DWG	
7-AB2-[illegible]	10-4-68
7-AB2-15	10-4-68
7-AB4-15	10-4-68
7-AB4-16, [illegible]	7-22-68
7-AB4-28 & 41	7-22-68
7-AB4-[illegible]8 & 19	10-15-68

SKILLING · HELLE · CHRISTIANSEN · ROBERTSON
Structural & Civil Engineers
☐ CHECKED
☒ APPROVED AS NOTED
☐ RESUBMIT
☐ REJECTED
Date 11/7/68 By SK

TRUSS DESIGNATION	TOP CHORD TWO ANGLES				BOTTOM CHORD TWO ANGLES				MAIN WEB "W"					VERTICAL "EST" STRUT					TRUSS DATA		FILLER		BEARING ANGLES				SPECIAL FILLER				
	MK	TYPE STEEL	CHORD SIZE	LENGTH	MK	TYPE STEEL	CHORD SIZE	LENGTH	MK	TYPE STEEL	DIA	LENGTH	NO. OF K	MK	TYPE STEEL	DIA	LENGTH	NUMBER REQUIRED			NO.	DIA.	MK.	TYPE STEEL	CHORD SIZE	LENGTH	MK.	TYPE STEEL	DIA.	PCS.	LENGTH
24T11C-1911	6	A242	1 1/2" x 1 1/4" x .230	19'-11"	7	A242	1 1/2" x 1 1/4" x .230"	19'-11"	3 3A	A242 A242	.75 .75	10'-1 1/2" 10'-1 1/2"	2K@3'-4"=6'-8" 2K@3'-4"=6'-8"	12	A242	.75	1'-11 7/8"	2			—	—	9	A242	1 1/2" x 1 1/4" x .23"	10'-10"	V7	A242	.75	3 (10)	2 7/8"

Es END	TRUSS DESIGNATION	WE	INCLINED "ST" STRUT				WEB "Wc"				
			MK	TYPE STEEL	DIA	LENGTH	MK	TYPE STEEL	PCS	DIA	LENGTH
	24T11C-1911	1'-6 1/4"	2	A242	.75	1'-11 3/4"	—	—	—	—	—

EL END	TRUSS DESIGNATION	BEARING ANGLES				WEv	DIAGONAL "T" STRUT				INCLINED "ST" STRUT				END STIFFENER MK V5			END STIFFENER MK V6			WEB "Wc"				
		MK.	TYPE STEEL	CHORD SIZE	LENGTH		MK.	TYPE STEEL	DIA	LENGTH	MK	TYPE STEEL	DIA.	LENGTH	TYPE STEEL	DIA.	LENGTH	TYPE STEEL	DIA.	LENGTH	MK	TYPE STEEL	PCS	DIA	LENGTH
	24T11C-1911	—	—	—	—	1'-6 1/4"	—	—	—	—	2	A242	.75	1'-11 [illegible]	—	—	—	—	—	—	—	—	—	—	—

NO.	DATE	REVISION	BY

BRIDGING TRUSS DETAILS
FOR
WORLD TRADE CENTER - N.Y.C
FOR
THE PORT OF NEW YORK AUTHORITY

BRIDGING TRUSS 24T11C x 19'-11" LONG
WORLD TRADE CENTER TOWERS A-B

FABRICATION BY LACLEDE STEEL COMPANY

FABRICATED AT MADISON, ILLINOIS		DESIGN DRAWING NO. 7-AB2-15	PLATE
APPROVED FOR FABRICATION BY ______ FOR PONYA	DATE	DRAWN BY [illegible] DATE OCT. 29, 1968	
APPROVED FOR FABRICATION BY ______ FOR FABRICATOR	DATE	CHECKED BY T. M. CHURA DATE OCT. 29, 1968	IN CHARGE OF PROD. - DEV.
DETAILED BY A C WEBER — LACLEDE STEEL CO.		FABRICATION CONT. NO. W.T.G. 221	SHEET NO. BT 211-C

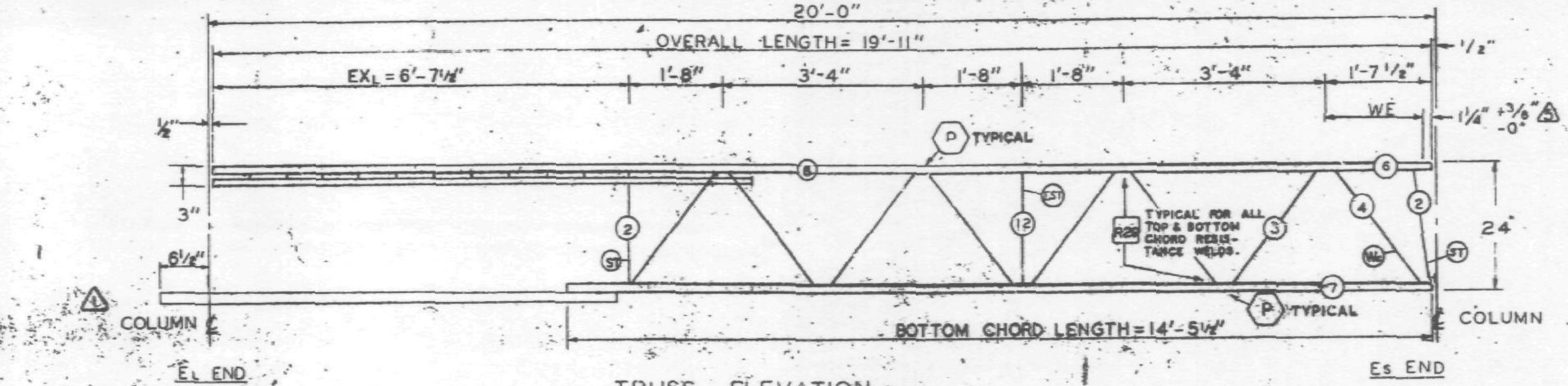

TRUSS ELEVATION

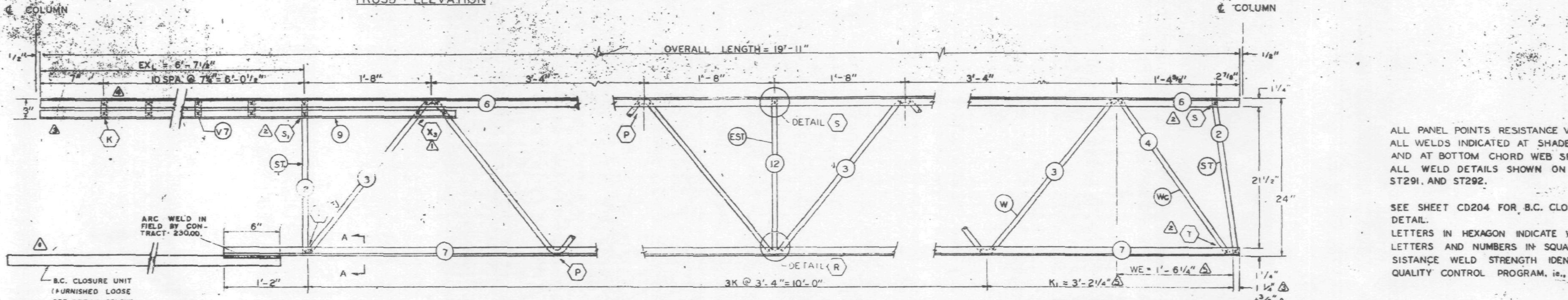

ELEVATION AT EL END　　ELEVATION AT ADDED STRUT　　ELEVATION AT Es END

ALL PANEL POINTS RESISTANCE WELDED (X).
ALL WELDS INDICATED AT SHADED AREAS AND AT BOTTOM CHORD WEB SPLICES (▥).
ALL WELD DETAILS SHOWN ON SHEETS ST290, ST291, AND ST292.

SEE SHEET CD204 FOR B.C. CLOSURE UNIT DETAIL.
LETTERS IN HEXAGON INDICATE WELD DETAIL, ie. (A).
LETTERS AND NUMBERS IN SQUARES INDICATE RESISTANCE WELD STRENGTH IDENTIFIED IN THE QUALITY CONTROL PROGRAM, ie., [R29].

FABRICATION REQUIRMENTS	DESIGN	TOLERANCE
CAMBER AT MIDSPAN	0"	[illegible]
DESIGN DEPTH	24"	[illegible]
PANEL "K"	3'-4"	[illegible]
PANEL "K1"	3'-2 1/4"	± 1/16"
WEB DEPTH	23 1/2"	[illegible]
OVERALL LENGTH	19'-11"	[illegible]

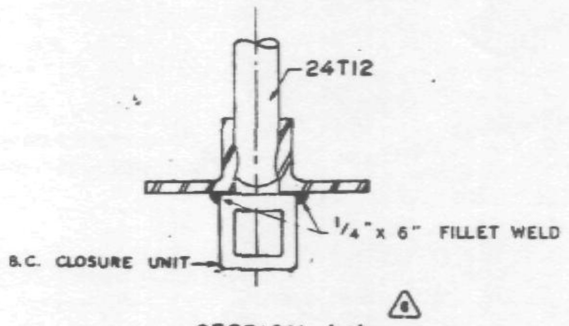

SECTION A-A

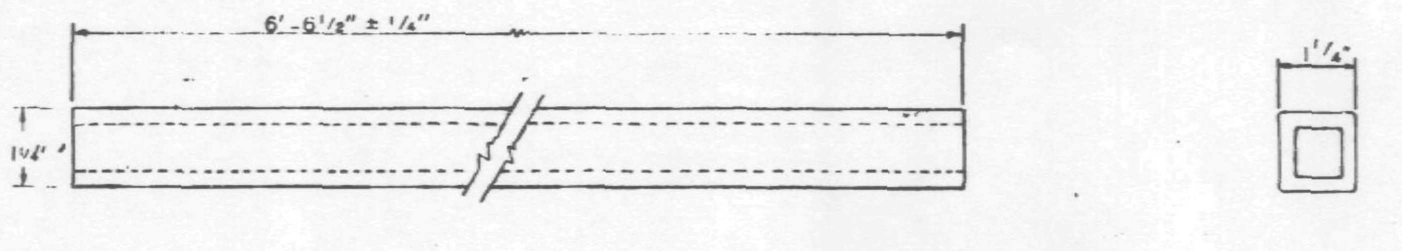

ELEVATION　　END VIEW

B.C. CLOSURE UNIT

REF. DWG.
7-AB2-1　4-1-68
7-AB2-7　2-15-68
7-AB4-15.1　1-3-68
7-AB4-16 & 18　6-6-62
7-AB6-19, 28 & 41　1-3-68
7-AB4-36　4-1-68

MATERIAL LIST FOR B.C. CLOSURE UNIT			
PCS.	TYPE STEEL	SIZE	LENGTH
1	A242	1 1/4" x .187 WALL SQ TUBING	6'-6 1/2"

PAINT
LACLEDE ELECTROCOAT
RED NO 10001

TRUSS DESIGNATION	TOP CHORD TWO ANGLES				BOTTOM CHORD TWO ANGLES				MAIN WEB "W"					VERTICAL "EST" STRUT					TRUSS DATA	
	MK.	TYPE STEEL	CHORD SIZE	LENGTH	MK.	TYPE STEEL	CHORD SIZE	LENGTH	MK.	TYPE STEEL	DIA.	LENGTH	NO OF K.	MK.	TYPE STEEL	DIA.	LENGTH	NUMBER REQUIRED		
24T12-1911	6	A242	1 1/2"x1 1/4"x.230"	19'-11"	7	A242	1 1/2"x1 1/4"x.230"	14'-5 1/4"	3	A242	.75	17'-11 1/4"	3 1/2 K @ 3'-4" = 11'-8"	12	A242	.75	1'-10 7/8"	1		

Es END TRUSS DESIGNATION	WE	INCLINED "ST" STRUT				WEB "Wc"				
	△5	MK.	TYPE STEEL	DIA	LENGTH	MK.	TYPE STEEL	DIA.	PCS.	LENGTH
24T12-1911	1'-6 1/4"	2	A242	.75	1'-11 3/4"	4	A242	.75	1	2'-5 1/2"

EL END TRUSS DESIGNATION	BEARING ANGLES				EXL	DIAGONAL "T" STRUT				VERTICAL "ST1" STRUT				END STIFFENER MK V7			
	MK.	TYPE STEEL	CHORD SIZE	LENGTH		MK.	TYPE STEEL	DIA	LENGTH	MK.	TYPE STEEL	DIA.	LENGTH	TYPE STEEL	DIA.	LENGTH	NO. REQ'D
24T12-1911	9	A242	1 1/2"x1 1/4"x.230"	8'-8"	6'-7 1/2"	—	—	—	—	2	A242	.75	1'-11 3/4"	A242	.75	2 7/8"	10

NO.	DATE	REVISION	BY.
7	12-4-68	CLOSURE UNIT	G.D.C.
6	11-13-68	CLOSURE UNIT	L.W.H.
5	9-9-68	END DIST (2)	
4	9-3-68	EL END	G.D.C.
3	7-27-68	Es & EL END	T.M.C.
2	7-8-68	AS NOTED	T.M.C.
1	6-28-68	FILLER SIZE, BOTTOM CHORD LENGTH	T.M.C.

BRIDGING TRUSS DETAILS
FOR
WORLD TRADE CENTER - N.Y.C.
FOR
THE PORT OF NEW YORK AUTHORITY

BRIDGING TRUSS 24T12 x 19'-11" LONG
WORLD TRADE CENTER TOWERS A-B

FABRICATION BY: LACLEDE STEEL COMPANY
FABRICATED AT: MADISON, ILLINOIS
DESIGN DRAWING NO. 7-AB2-7　PLATE
APPROVED FOR FABRICATION FOR P.O.N.Y.A.　DATE 12/11/68
DRAWN BY: [illegible]　DATE: FEB. 24, 1968
APPROVED FOR FABRICATION BY ____ FOR FABRICATOR　DATE
CHECKED BY: J.R. PAUL　DATE FEB. 24, 1968
IN CHARGE OF PROD. DEV.
DETAILED BY A. C. WEBER
FABRICATION CONT. NO. W.T.C. 221
SHEET NO. BT212

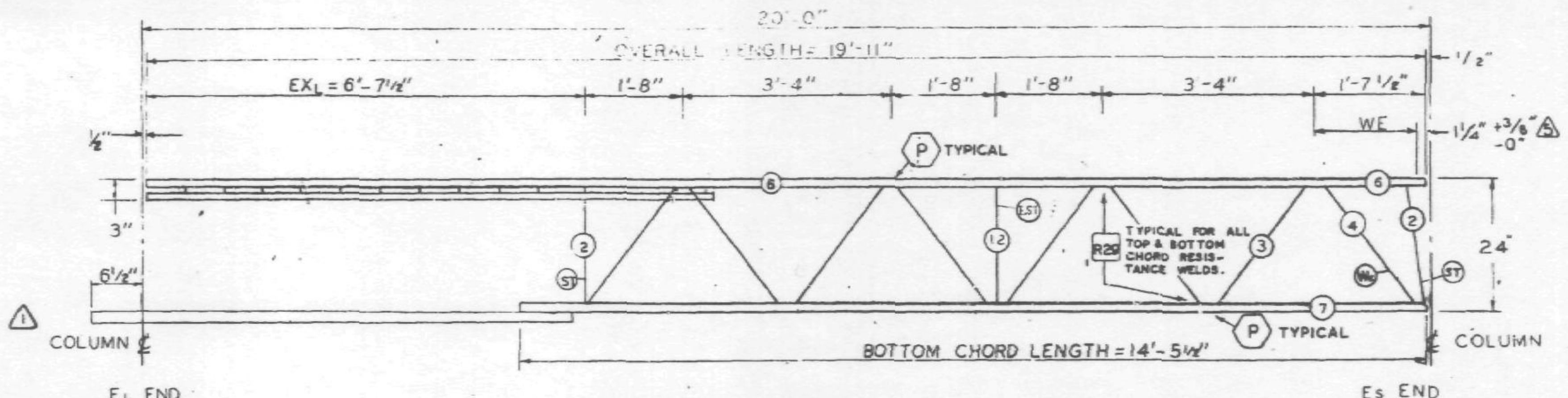

TRUSS ELEVATION

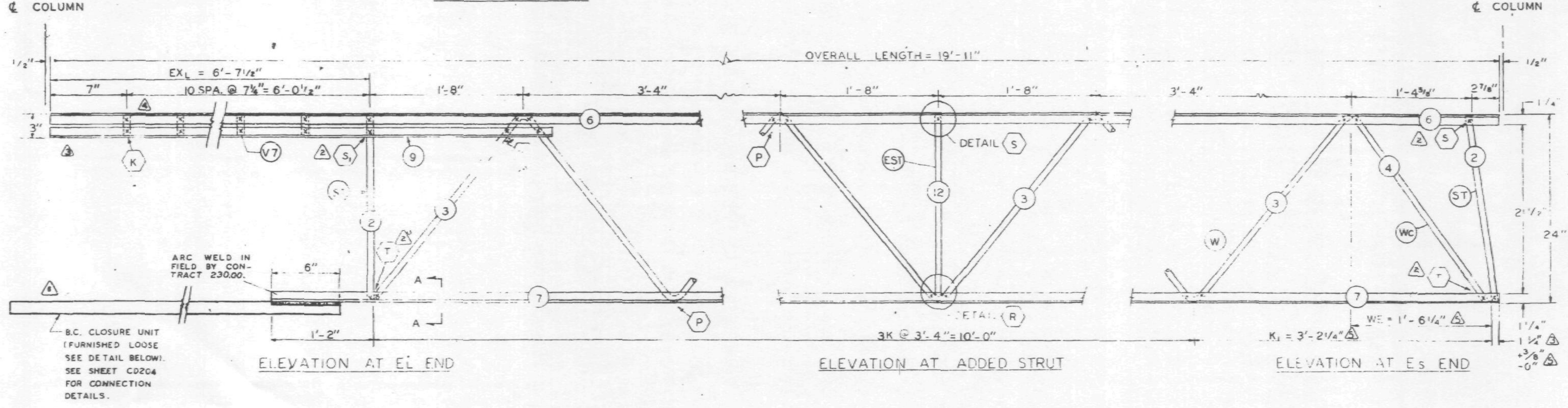

ELEVATION AT E_L END

ELEVATION AT ADDED STRUT

ELEVATION AT E_S END

FABRICATION REQUIRMENTS		
	DESIGN	TOLERANCE
CAMBER AT MIDSPAN	0"	+ ⅜"
DESIGN DEPTH	24"	± ¼"
PANEL "K"	3'-4"	± ¼"
PANEL "K_1"	3'-2½"	± 1/4"
WEB DEPTH	23⅞"	± ¼"
OVERALL LENGTH	19'-11"	± ⅜"

ALL PANEL POINTS RESISTANCE WELDED (X).
ALL WELDS INDICATED AT SHADED AREAS AND AT BOTTOM CHORD WEB SPLICES (▥).
ALL WELD DETAILS SHOWN ON SHEETS ST290, ST291, AND ST292.

SEE SHEET CD204 FOR B.C. CLOSURE UNIT DETAIL.
LETTERS IN HEXAGON INDICATE WELD DETAIL, ie. ⟨A⟩.
LETTERS AND NUMBERS IN SQUARES INDICATE RESISTANCE WELD STRENGTH IDENTIFIED IN THE QUALITY CONTROL PROGRAM, ie., [R29].

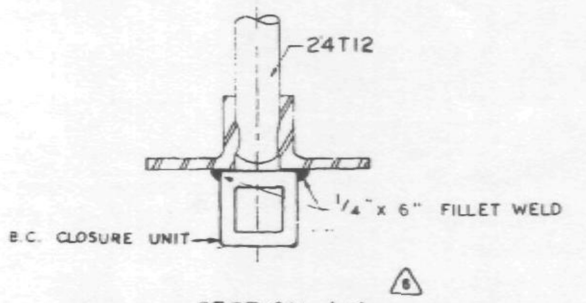

SECTION A-A

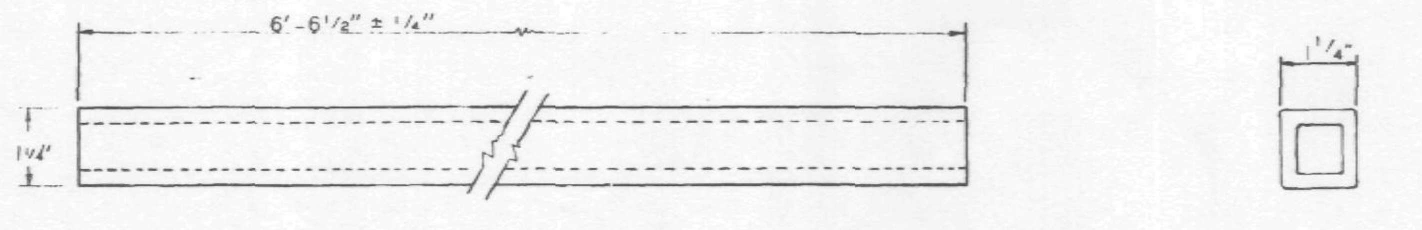

ELEVATION

END VIEW

B.C. CLOSURE UNIT

REF. DWG.

7-AB2-1	4-1-68
7-AB2-7	2-15-68
7-AB4-15.1	1-3-68
7-AB4-16 & 18	5-8-62
7-AB4-19, 28 & 41	1-3-68
7-AB4-38	4-1-68

MATERIAL LIST FOR B.C. CLOSURE UNIT

PCS.	SIZE	LENGTH	
(2) 1	1¼" x .187 WALL	6'-6½"	Type St
	SQ TUBING		A242

PAINT
LACLEDE ELECTROCOAT
RED NO 10001

TRUSS DESIGNATION	TOP CHORD TWO ANGLES				BOTTOM CHORD TWO ANGLES				MAIN WEB "W"					VERTICAL "EST" STRUT					TRUSS DATA	
	MK.	TYPE STEEL	CHORD SIZE	LENGTH	MK	TYPE STEEL	CHORD SIZE	LENGTH	MK	TYPE STEEL	DIA	LENGTH	NO. OF K	MK	TYPE STEEL	DIA	LENGTH	NUMBER REQUIRED		
24T12-1911	6	A242	1½"x1¼"x.23[illegible]	[illegible]-11"	7	A242	1½"x1¼"x.230"	14'-5½"	3	A242	.75	17'-11¼"	3½K @ 3'-4" = 11'-8"	12	A242	.75	1'-10⅞"	1		

E_S END	TRUSS DESIGNATION	WE	INCLINED "ST" STRUT				WEB "Wc"				
		△5	MK	TYPE STEEL	DIA	LENGTH	MK	TYPE STEEL	DIA.	PCS.	LENGTH
	24T12-1911	1'-6¼"	2	A242	.75	1'-11¾"	4	A242	.75	1	2' 5½"

E_L END	TRUSS DESIGNATION	BEARING ANGLES				EX_L	DIAGONAL "T" STRUT				VERTICAL "ST_1" STRUT				END STIFFENER MK V7			
		MK.	TYPE STEEL	CHORD SIZE	LENGTH		MK.	TYPE STEEL	DIA	LENGTH	MK.	TYPE STEEL	DIA	LENGTH	TYPE STEEL	DIA.	LENGTH	NO. REQ'D
	24T12-1911	9	A242	1½"x1¼"x.230"	8'-8"	6'-7½"	—	—	—	—	2	A242	.75	1'-11¾"	A242	.75	2⅞"	10

SKILLING-HELLE CHRISTIANSEN-ROBERTSON Structural & Civil Engineers
APPROVED
X APPROVED AS NOTED
12/3/68 SK

NO.	DATE	REVISION	BY
△6	11-13-68	CLOSURE UNIT	L.W.H.
△5	9-9-68	END DIST. (2)	T.M.C.
△4	9-3-68	E_L END	G.D.C.
△3	7-27-68	E_S & E_L END	T.M.C.
△2	7-8-68	AS NOTED	T.M.C.
△1	6-26-68	FILLER SIZE, BOTTOM CHORD LENGTH	T.M.C.

BRIDGING TRUSS DETAILS
FOR
WORLD TRADE CENTER - N.Y.C.
FOR
THE PORT OF NEW YORK AUTHORITY

BRIDGING TRUSS 24T12 x 19'-11" LONG
WORLD TRADE CENTER TOWERS A-B

FABRICATION BY LACLEDE STEEL COMPANY
FABRICATED AT MADISON, ILLINOIS
DESIGN DRAWING NO: 7-AB2-7 PLATE
APPROVED FOR FABRICATION BY ________ FOR P.O.N.Y.A. DATE
DRAWN BY: G.L.R. DATE FEB. 24, 1968
APPROVED FOR FABRICATION BY ________ FOR FABRICATOR DATE
CHECKED BY: J.R. PAUL DATE 2.24.1968
IN CHARGE OF PROD. DEV.
DETAILED BY A C WEBER
FABRICATION CONT. NO. W.T.C. 221
SHEET NO. BT212

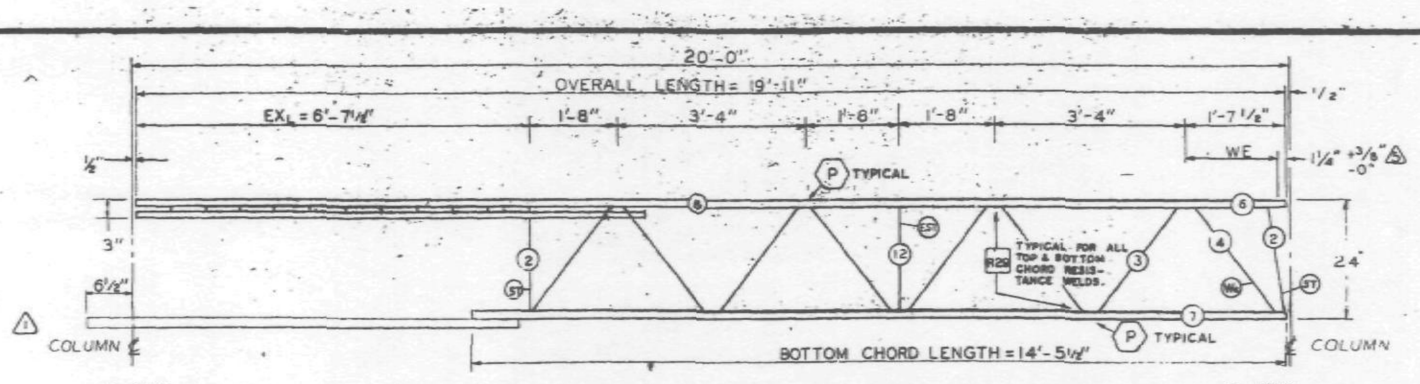

TRUSS ELEVATION

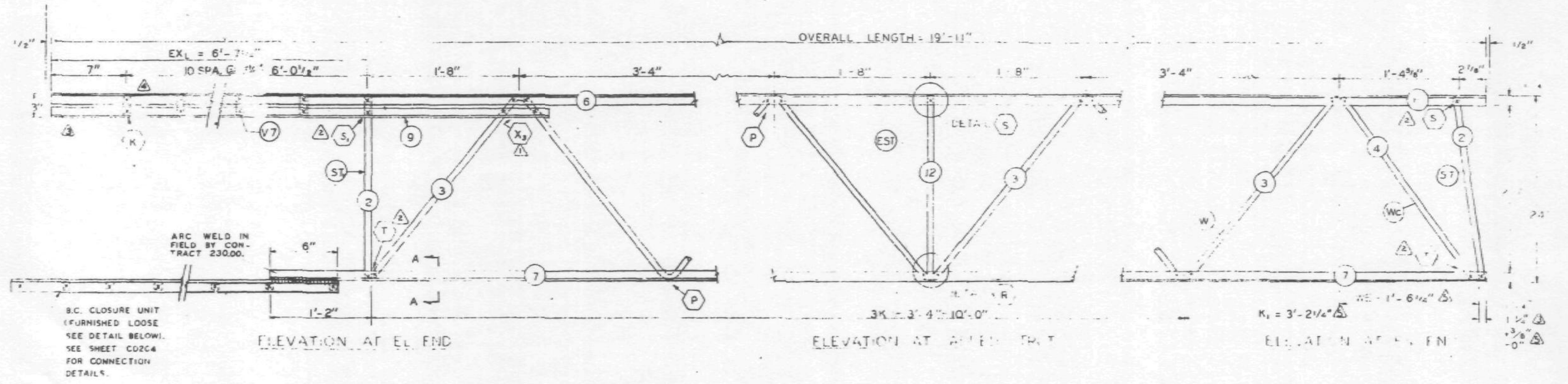

ELEVATION AT E_L END

ELEVATION AT [illegible]

ELEVATION AT E_S END

FABRICATION REQUIRMENTS		
	DESIGN	TOLERANCE
CAMBER AT MIDSPAN	0"	+ ⅜"
DESIGN DEPTH	24"	± ¼"
PANEL "K"	3'-4"	± ¼"
PANEL "K₁"	3'-2½"	± ¼"
WEB DEPTH	23⅞"	± ¼"
OVERALL LENGTH	19'-11"	± ⅜"

ALL PANEL POINTS RESISTANCE WELDED (X)
ALL WELDS INDICATED AT SHADED AREAS
AND AT BOTTOM CHORD WEB SPLICES (▥)
ALL WELD DETAILS SHOWN ON SHEETS ST290, ST291, AND ST292.

SEE SHEET CD204 FOR B.C. CLOSURE CONNECTION DETAIL.
LETTERS IN HEXAGON INDICATE WELD DETAIL, ie. (A).
LETTERS AND NUMBERS IN SQUARES INDICATE RESISTANCE WELD STRENGTH IDENTIFIED IN THE QUALITY CONTROL PROGRAM, ie., [R29].

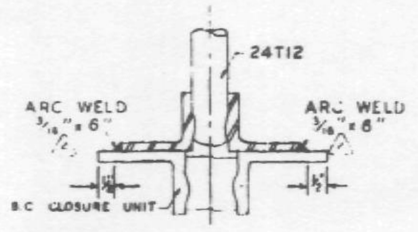

SECTION A-A △

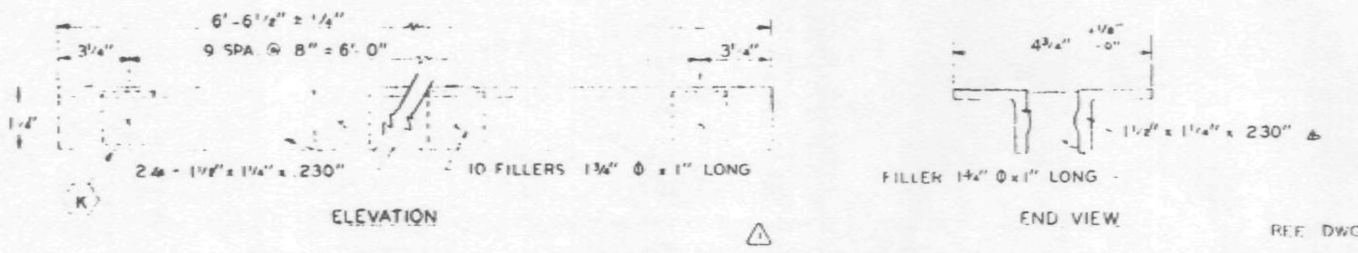

B.C. CLOSURE UNIT

REF DWG
7-AB2-1 ... 4-1-68
7-AB2-7 ... 2-15-68
7-AB4-15.1 ... 1-3-68
7-AB4-16 & 18 ... 5-6-62
7-AB4-19, 28 & 41 ... 1-3-68
7-AB4-38 ... 4-1-68

PAINT
LACLEDE ELECTROCOAT
RED NO. 1060

MATERIAL LIST FOR B.C. CLOSURE UNIT		
PCS.	SIZE	LENGTH
2	1½"x1¼"x.23" ∠s	6'-6½"
10	1¾" ⌀ FILLERS	1"

TRUSS DESIGNATION	TOP CHORD TWO ANGLES				BOTTOM CHORD TWO ANGLES				MAIN WEB "W"					VERTICAL "EST" STRUT					TRUSS DATA	
	MK	TYPE STEEL	CHORD SIZE	LENGTH	MK	TYPE STEEL	CHORD SIZE	LENGTH	MK	TYPE STEEL	DIA	LENGTH	NO OF K	MK	TYPE STEEL	DIA	LENGTH	NUMBER REQUIRED		
24T12-1911	6	A242	1½"x1¼"x.230"	19'-11"	7	A242	1½"x1¼"x.230"	14'-5½"	3	A242	.75	17'-11⅝"	3½K @ 3'-4" = 11'-8"	12	A242	.75	1'-10⅞"	1		

E_S END	TRUSS DESIGNATION	WE	INCLINED "ST" STRUT				WEB "Wc"				
		△5	MK	TYPE STEEL	DIA	LENGTH	MK	TYPE STEEL	DIA.	PCS.	LENGTH
	24T12-1911	1'-6¼"	2	A242	.75	1'-11¾"	4	A242	.75	1	2'-5½"

E_L END	TRUSS DESIGNATION	BEARING ANGLES				EX_L	DIAGONAL "T" STRUT				VERTICAL "ST₁" STRUT				END STIFFENER MK V7			
		MK	TYPE STEEL	CHORD SIZE	LENGTH		MK	TYPE STEEL	DIA	LENGTH	MK	TYPE STEEL	DIA	LENGTH	TYPE STEEL	DIA.	LENGTH	NO. REQ'D
	24T12-1911	9	A242	1½"x1¼"x.230"	8'-8"	6'-7½"	—	—	—	—	2	A242	.75	1'-11¾"	A242	.75	2⅞"	10

NO.	DATE	REVISION	BY
△5	9-9-68	END DIST (2)	T.M.C.
△4	9-3-68	E_L END	G.D.C.
△3	7-27-68	E_S & E_L END	T.M.C.
△2	7-8-68	AS NOTED	T.M.C.
△1	6-26-68	FILLER SIZE, BOTTOM CHORD LENGTH	T.M.C.

BRIDGING TRUSS DETAILS
FOR
WORLD TRADE CENTER - N.Y.C
FOR
THE PORT OF NEW YORK AUTHORITY

BRIDGING TRUSS 24T12 x 19'-11" LONG
WORLD TRADE CENTER TOWERS A-B

FABRICATION BY LACLEDE STEEL COMPANY

FABRICATED AT MADISON, ILLINOIS	DESIGN DRAWING NO 7-AB2-7	PLATE
APPROVED FOR FABRICATION BY [illegible] FOR PONYA — DATE 9/10/68	DRAWN BY [illegible] DATE FEB. 24, 1968	
APPROVED FOR FABRICATION BY FOR FABRICATOR — DATE	CHECKED BY J.R. PAUL DATE FEB. 24, 1968	IN CHARGE OF PROD. DEV.
DETAILED BY A.C. WEBER	FABRICATION CONT. NO W.T.C. 221	SHEET NO BT212

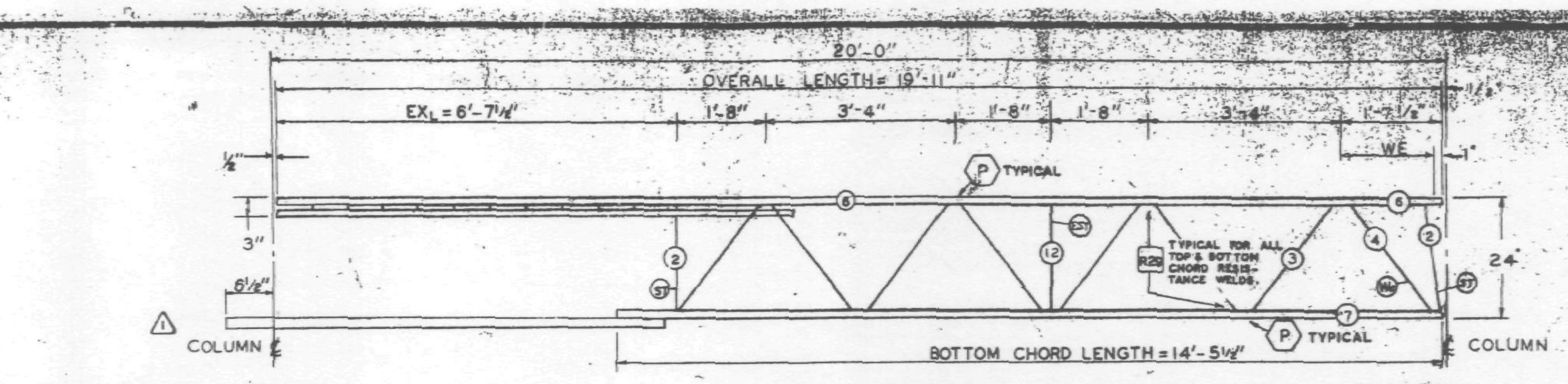

TRUSS ELEVATION

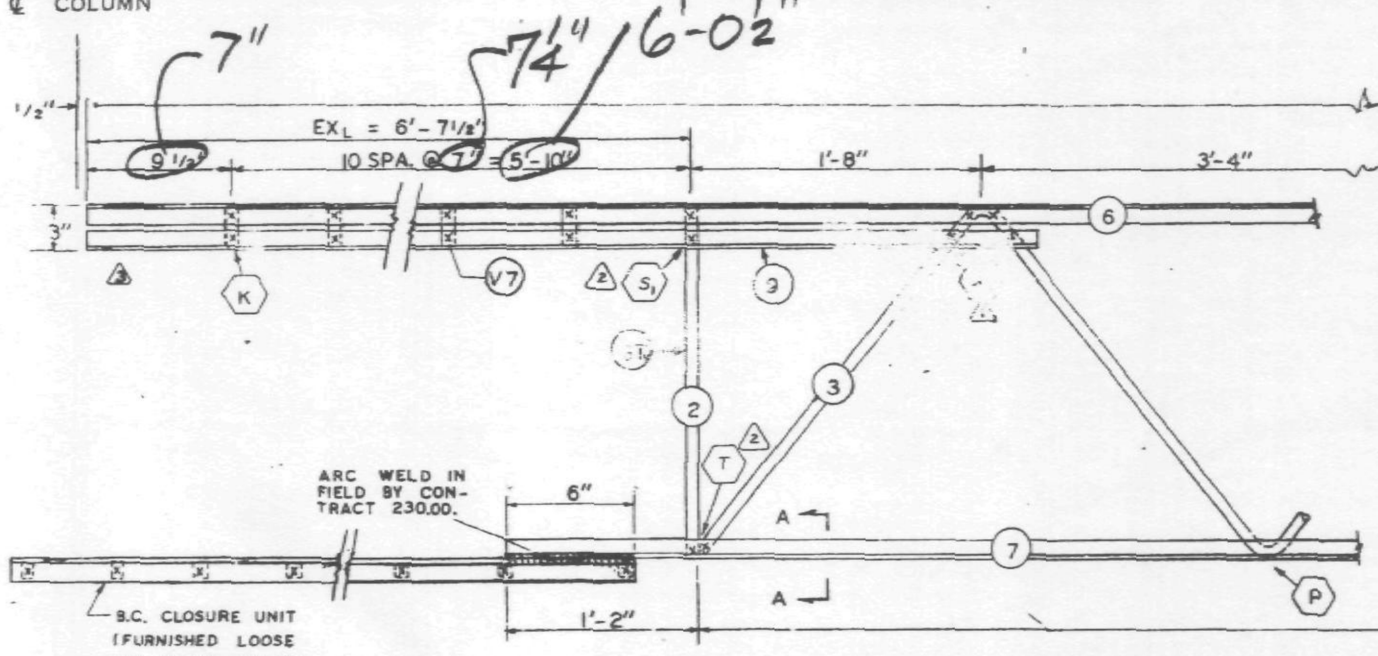

ELEVATION AT EL END

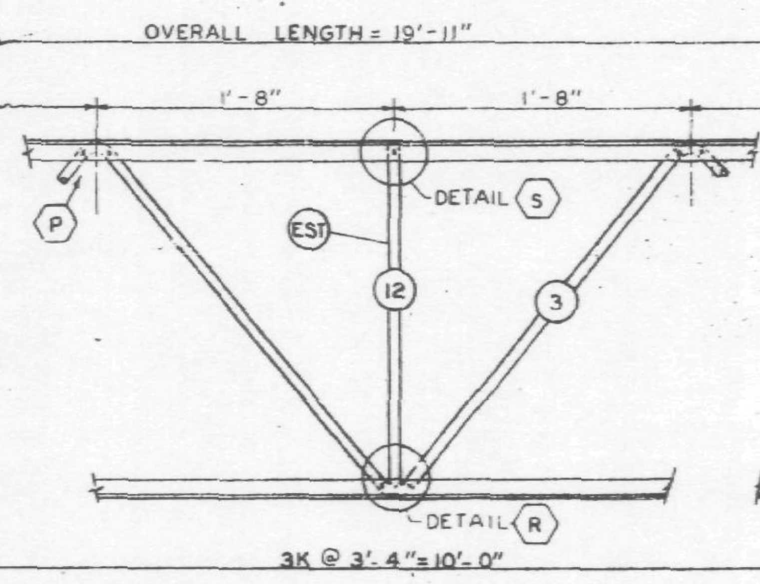

ELEVATION AT ADDED STRUT

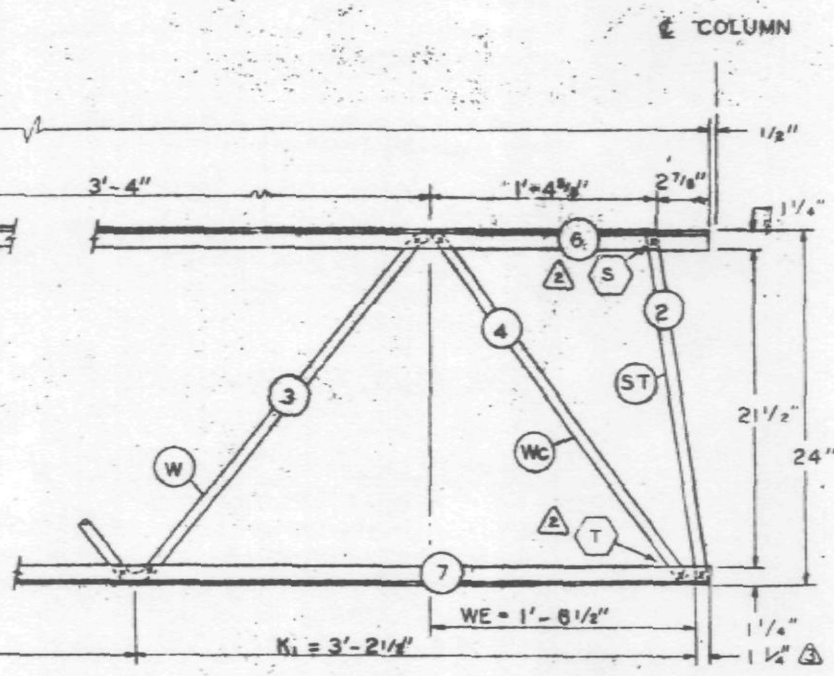

ELEVATION AT ES END

FABRICATION REQUIRMENTS		
	DESIGN	TOLERANCE
CAMBER AT MIDSPAN	0"	+ 3/8"
DESIGN DEPTH	24"	± 1/4"
PANEL "K"	3'-4"	± 1/4"
PANEL "K1"	3'-2 1/2"	± 1/4"
WEB DEPTH	23 1/8"	± 1/4"
OVERALL LENGTH	19'-11"	± 3/8"

ALL PANEL POINTS RESISTANCE WELDED (x)
ALL WELDS INDICATED AT SHADED AREAS AND AT BOTTOM CHORD WEB SPLICES
ALL WELD DETAILS SHOWN ON SHEETS ST290, ST291, AND ST292.

SEE SHEET CD204 FOR B.C. CLOSURE CONNECTION DETAIL.
LETTERS IN HEXAGON INDICATE WELD DETAIL, ie. (A).
LETTERS AND NUMBERS IN SQUARES INDICATE RESISTANCE WELD STRENGTH IDENTIFIED IN THE QUALITY CONTROL PROGRAM, ie., R29.

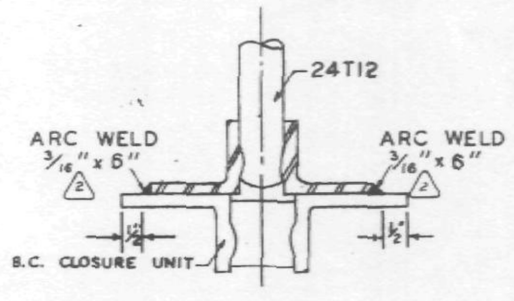

SECTION A-A

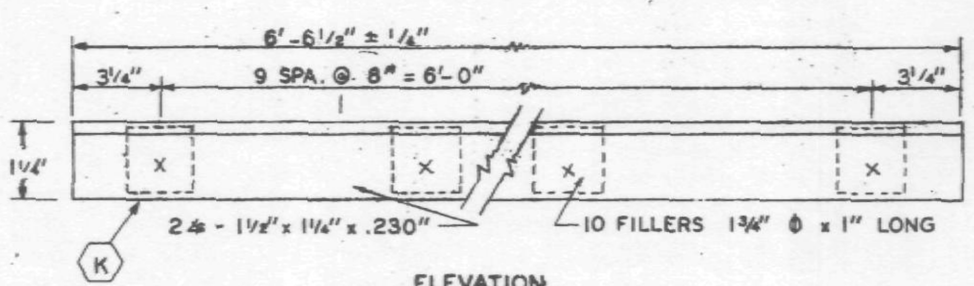

ELEVATION

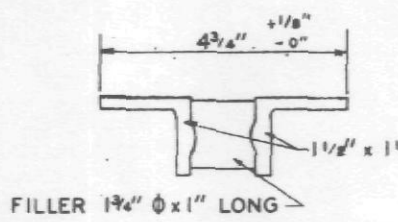

END VIEW

B.C. CLOSURE UNIT

REF. DWG.

7-AB2-1	4-1-68
7-AB2-7	2-15-68
7-AB4-15.1	1-3-68
7-AB4-16 & 18	5-8-68
7-AB4-19, 28 & 41	1-3-68
7-AB4-38	4-1-68

PAINT
LACLEDE ELECTROCOAT
RED NO 10001

MATERIAL LIST FOR B.C. CLOSURE UNIT		
PCS.	SIZE	LENGTH
2	1 1/2"x1 1/4"x.23" ∠s	6'-6 1/2"
10	1 3/4" ϕ FILLERS	1"

TRUSS DESIGNATION	TOP CHORD TWO ANGLES				BOTTOM CHORD TWO ANGLES				MAIN WEB "W"					VERTICAL "EST" STRUT					TRUSS DATA	
	MK.	TYPE STEEL	CHORD SIZE	LENGTH	MK.	TYPE STEEL	CHORD SIZE	LENGTH	MK.	TYPE STEEL	DIA.	LENGTH	NO. OF K	MK.	TYPE STEEL	DIA.	LENGTH	NUMBER REQUIRED		
24T12-1911	6	A242	1 1/2"x1 1/4"x.230"	19'-11"	7	A242	1 1/2"x1 1/4"x.230"	14'-5 1/2"	3	A242	.75	17'-11 1/4"	3 1/2K @ 3'-4" = 11'-8"	12	A242	.75	1'-10 7/8"	1		

ES END

TRUSS DESIGNATION	WE	INCLINED "ST" STRUT				WEB "Wc"				
		MK.	TYPE STEEL	DIA.	LENGTH	MK.	TYPE STEEL	DIA.	PCS.	LENGTH
24T12-1911	1'-6 1/2"	2	A242	.75	1'-11 3/4"	4	A242	.75	1	2'-5 1/2"

EL END

TRUSS DESIGNATION	BEARING ANGLES				EXL	DIAGONAL "T" STRUT				VERTICAL "STv" STRUT				END STIFFENER MK. V7			
	MK.	TYPE STEEL	CHORD SIZE	LENGTH		MK.	TYPE STEEL	DIA.	LENGTH	MK.	TYPE STEEL	DIA.	LENGTH	TYPE STEEL	DIA.	LENGTH	NO. REQ'D
24T12-1911	9	A242	1 1/2"x1 1/4"x.230"	8'-8"	6'-7 1/4"	—	—	—	—	2	A242	.75	1'-11 3/4"	A242	.75	2 7/8"	10

SKILLING - HELLE CHRISTIANSEN - ROBERTSON
Structural & Civil Engineers
APPROVED
APPROVED AS NOTED

NO.	DATE	REVISION	BY
3	7-27-68	ES & EL END	T.M.C.
2	7-8-68	AS NOTED	T.M.C.
1	[illegible]	FILLER SIZE, BOTTOM CHORD LENGTHS	T.M.C.

BRIDGING TRUSS DETAILS
FOR
WORLD TRADE CENTER - N.Y.C.
FOR
THE PORT OF NEW YORK AUTHORITY

BRIDGING TRUSS 24T12 x 19'-11" LONG
WORLD TRADE CENTER TOWERS A-B

FABRICATION BY: LACLEDE STEEL COMPANY

FABRICATED AT. MADISON, ILLINOIS		DESIGN DRAWING NO: 7-AB2-7	PLATE
APPROVED FOR FABRICATION BY: FOR P.O.N.Y.A.	DATE	DRAWN BY: DATE: FEB. 24, 1968	
APPROVED FOR FABRICATION BY FOR FABRICATOR	DATE	CHECKED BY: J.R. PAUL DATE: FEB. 24, 1968	IN CHARGE OF PROD. DEV.
DETAILED BY: LACLEDE STEEL CO.		FABRICATION CONT. NO. W.T.C. 221	SHEET NO. BT212

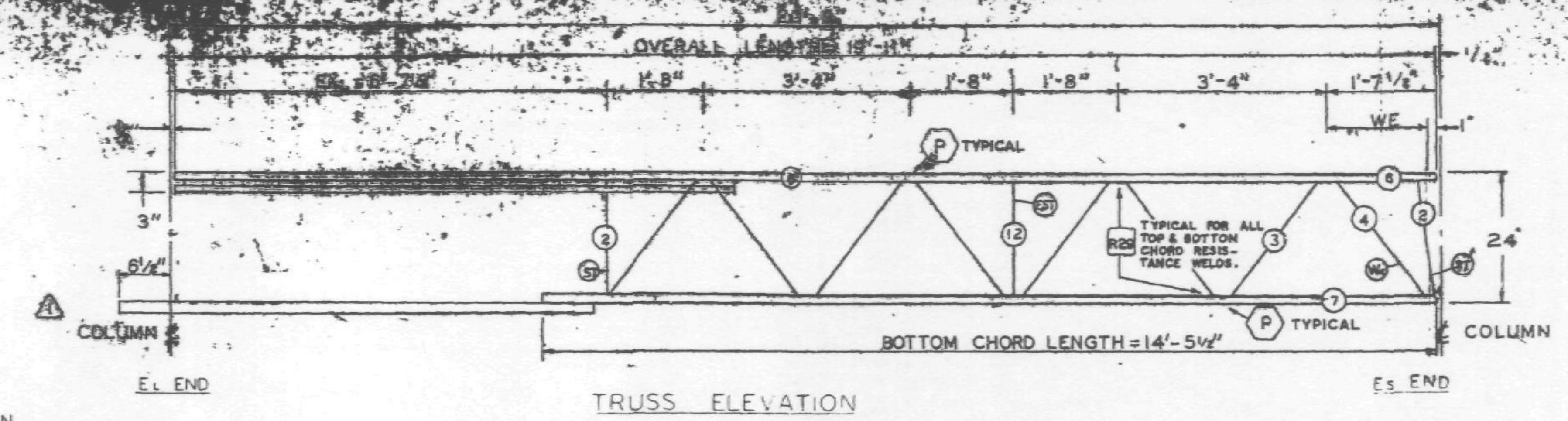

TRUSS ELEVATION

FABRICATION REQUIREMENTS	DESIGN	
CAMBER AT MIDSPAN	[illegible]	[illegible]
DESIGN DEPTH	[illegible]	[illegible]
PANEL "P"	[illegible]	[illegible]
PANEL "K"	[illegible]	[illegible]
WEB DEPTH	[illegible]	[illegible]
OVERALL LENGTH	[illegible]	[illegible]

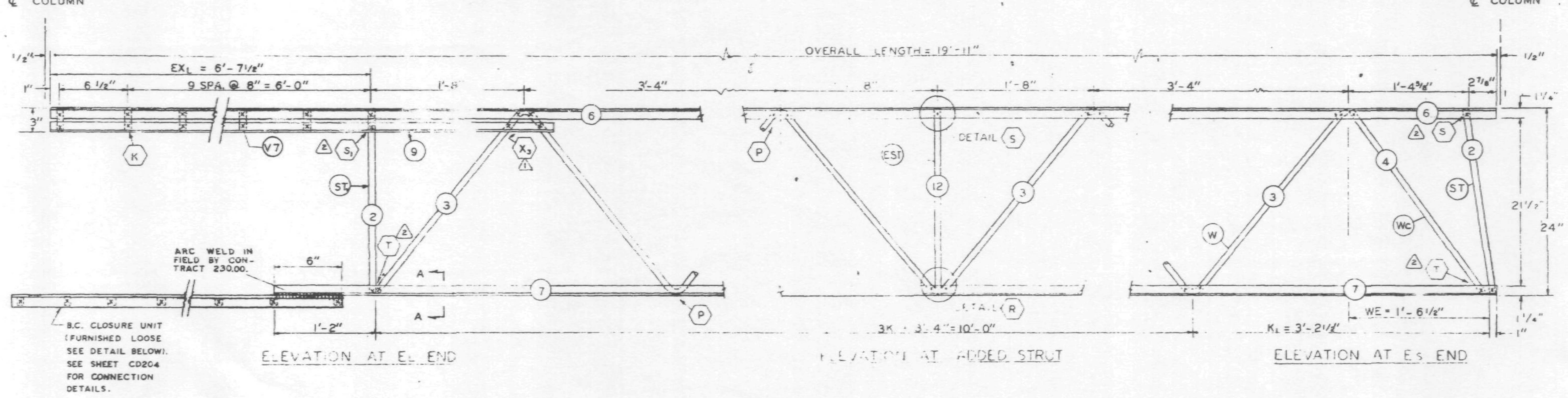

ELEVATION AT EL END

ELEVATION AT ADDED STRUT

ELEVATION AT ES END

ALL PANEL POINTS RESISTANCE WELDED (X).
ALL WELDS INDICATED AT SHADED AREAS AND AT BOTTOM CHORD WEB SPLICES (HHH)
ALL WELD DETAILS SHOWN ON SHEETS ST290, ST291, AND ST292.

SEE SHEET CD204 FOR B.C. CLOSURE CONNECTION DETAIL.
LETTERS IN HEXAGON INDICATE WELD DETAIL, ie. (A).
LETTERS AND NUMBERS IN SQUARES INDICATE RESISTANCE WELD STRENGTH IDENTIFIED IN THE QUALITY CONTROL PROGRAM, ie., R29.

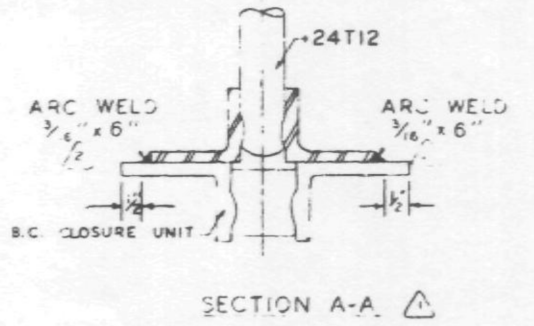

SECTION A-A

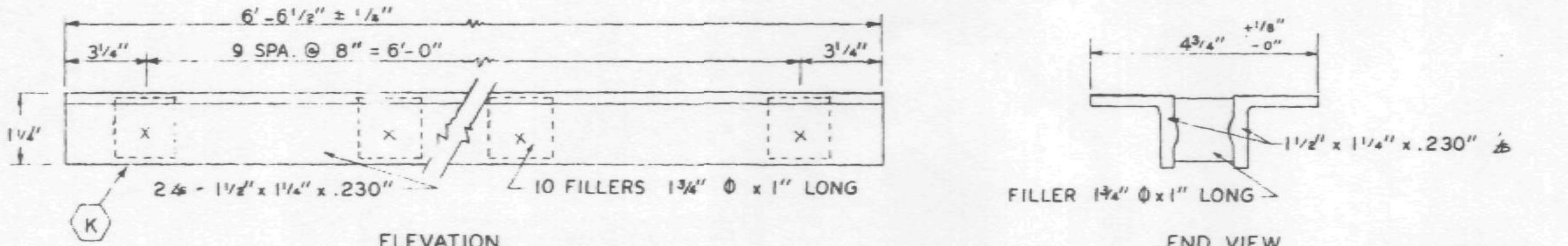

ELEVATION

END VIEW

B.C. CLOSURE UNIT

MATERIAL LIST FOR B.C. CLOSURE UNIT		
PCS.	SIZE	LENGTH
2	1 1/2" x 1 1/4" x .23"	6'-6 1/2"
10	1 3/4" Φ FILLERS	1"

PAINT
LACLEDE ELECTROCOAT
RED NO 10001

REF. DWG.	
7-AB2-1	4-1-68
7-AB2-7	2-15-68
7-AB4-15.1	1-3-68
7-AB4-16 & 18	5-6-62
7-AB4-19, 28 & 41	1-3-68
7-AB4-38	4-1-68

TRUSS DESIGNATION	TOP CHORD TWO ANGLES				BOTTOM CHORD TWO ANGLES				MAIN WEB "W"					VERTICAL "EST" STRUT					TRUSS DATA	
	MK.	TYPE STEEL	CHORD SIZE	LENGTH	MK.	TYPE STEEL	CHORD SIZE	LENGTH	MK.	TYPE STEEL	DIA.	LENGTH	NO. OF K	MK.	TYPE STEEL	DIA.	LENGTH	NUMBER REQUIRED		
[illegible] 1911	6	A242	1 1/2" x 1 1/4" x .230"	19'-11"	7	A242	1 1/2" x 1 1/4" x .230"	14'-5 1/2"	3	A242	.75	17'-11 1/4"	3 1/2 K @ 3'-4" = 11'-8"	12	A242	.75	1'-10 7/8"	1		

ES END	TRUSS DESIGNATION	WE	INCLINED "ST" STRUT				WEB "Wc"				
			MK.	TYPE STEEL	DIA.	LENGTH	MK.	TYPE STEEL	DIA.	PCS.	LENGTH
	24T12-1911	1'-6 1/2"	2	A242	.75	1'-11 3/4"	4	A242	.75	1	2'-5 1/2"

EL END	TRUSS DESIGNATION	BEARING ANGLES				EXL	DIAGONAL "T" STRUT				VERTICAL "ST1" STRUT				END STIFFENER MK V7			
		MK.	TYPE STEEL	CHORD SIZE	LENGTH		MK.	TYPE STEEL	DIA.	LENGTH	MK.	TYPE STEEL	DIA.	LENGTH	TYPE STEEL	DIA.	LENGTH	NO. REQ'D
	24T12-1911	9	A242	1 1/2" x 1 1/4" x .230"	8'-8"	6'-7 1/2"	—	—	—	—	2	A242	.75	1'-11 3/4"	A242	.75	2 7/8"	10

NO.	DATE	REVISION	BY
2	7-8-68	AS NOTED	T.M.C.
1	6-25-68	FILLER SIZE, BOTTOM CHORD LENGTH	T.M.C.

BRIDGING TRUSS DETAILS
FOR
WORLD TRADE CENTER - N.Y.C.
FOR
THE PORT OF NEW YORK AUTHORITY

BRIDGING TRUSS 24T12 x 19'-11" LONG
WORLD TRADE CENTER TOWERS A-B

FABRICATION BY LACLEDE STEEL COMPANY

FABRICATED AT MADISON, ILLINOIS		DESIGN DRAWING NO. 7-AB2-7	PLATE
APPROVED FOR FABRICATION BY JW FOR PONYA	DATE 7/9/68	DRAWN BY [illegible] DATE FEB. 24, 1968	
APPROVED FOR FABRICATION BY FOR FABRICATOR	DATE	CHECKED BY: J.R. PAUL DATE FEB. 24, 1968	IN CHARGE OF PROD. DEV.
DETAILED BY A. C. WEBER		FABRICATION CONT. NO. W.T.C. 221	SHEET NO. BT212

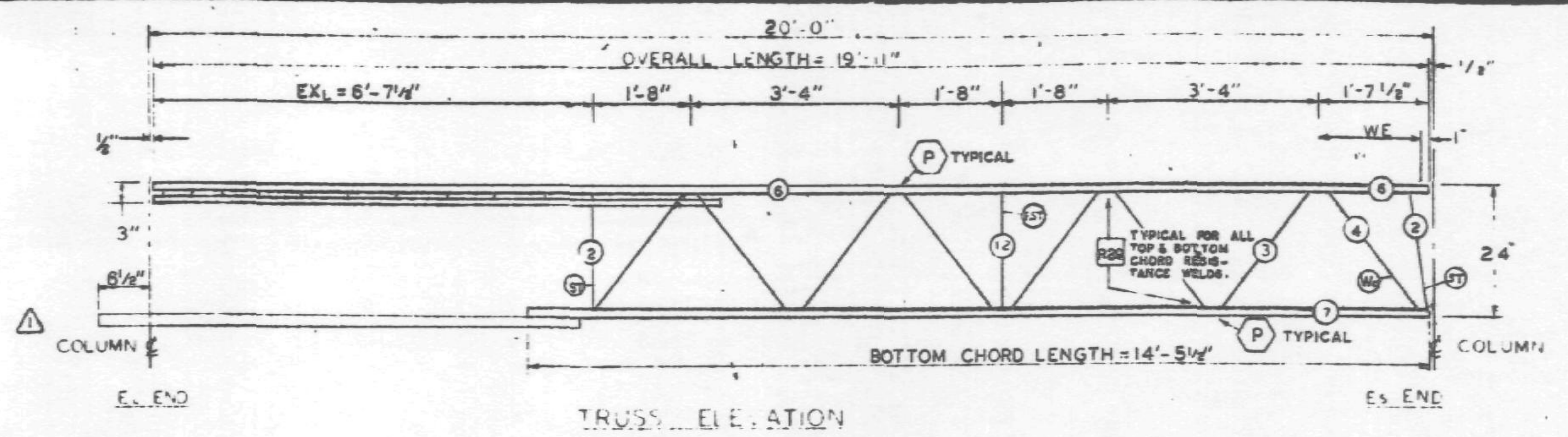

TRUSS ELEVATION

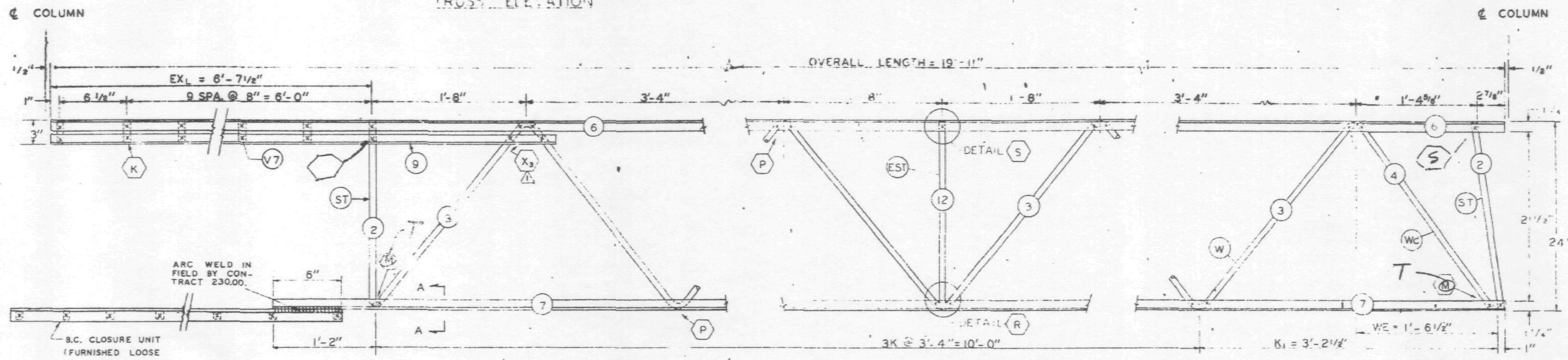

ELEVATION AT EL END

ELEVATION AT ADDED STRUT

ELEVATION AT ES END

FABRICATION REQUIRMENTS		
	DESIGN	TOLERANCE
CAMBER AT MIDSPAN	0"	+ 3/8"
DESIGN DEPTH	24"	± 1/4"
PANEL "K"	3'-4"	± 1/4"
PANEL "K1"	3'-2 1/2"	± 1/4"
WEB DEPTH	23 1/2"	± 1/4"
OVERALL LENGTH	19'-11"	± 3/8"

ALL PANEL POINTS RESISTANCE WELDED (X).
ALL WELDS INDICATED AT SHADED AREAS AND AT BOTTOM CHORD WEB SPLICES.
ALL WELD DETAILS SHOWN ON SHEETS ST290, ST291, AND ST292.

SEE SHEET CD204 FOR B.C. CLOSURE CONNECTION DETAIL.
LETTERS IN HEXAGON INDICATE WELD DETAIL, ie. (A).
LETTERS AND NUMBERS IN SQUARES INDICATE RESISTANCE WELD STRENGTH IDENTIFIED IN THE QUALITY CONTROL PROGRAM, ie., [R29].

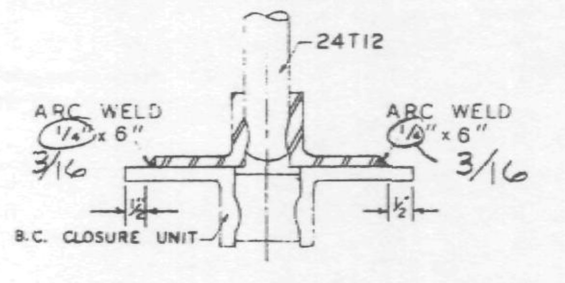

SECTION A-A △

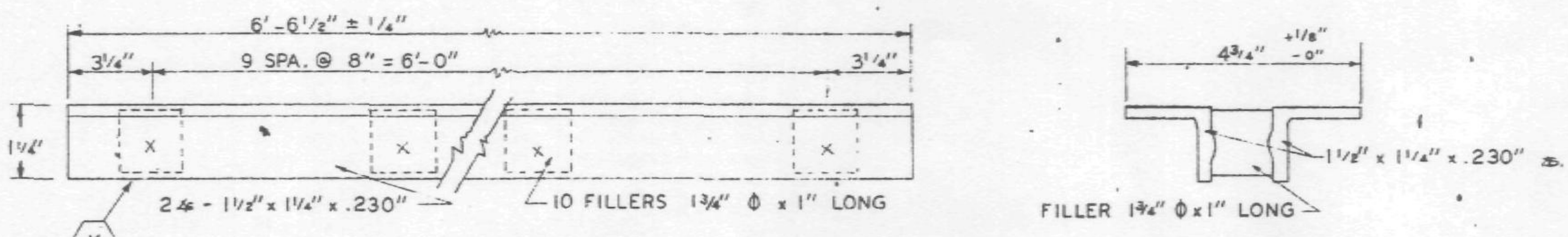

ELEVATION

END VIEW

△ B.C. CLOSURE UNIT

REF. DWG.	
7-AB2-1	4-1-68
7-AB2-7	2-15-68
7-AB4-15.1	1-3-68
7-AB4-16 & 18	5-8-63
7-AB4-19,28 & 41	1-3-68
7-AB4-38	4-1-68

MATERIAL LIST FOR B.C. CLOSURE UNIT		
PCS.	SIZE	LENGTH
2	1 1/2"x1 1/4"x.23" ∠s	6'-6 1/2"
10	1 3/4" Φ FILLERS	1"

PAINT
LACLEDE ELECTROCOAT
RED NO 1000

TRUSS DESIGNATION	TOP CHORD TWO ANGLES				BOTTOM CHORD TWO ANGLES				MAIN WEB "W"					VERTICAL "EST" STRUT					TRUSS DATA	
	MK.	TYPE STEEL	CHORD SIZE	LENGTH	MK	TYPE STEEL	CHORD SIZE	LENGTH	MK	TYPE STEEL	DIA	LENGTH	NO OF K	MK	TYPE STEEL	DIA	LENGTH	NUMBER REQUIRED		
24T12-1911	6	A242	1 1/2"x1 1/4"x.230"	19'-11"	7	A242	1 1/2"x1 1/4"x.230"	14'-5 1/2"	3	A242	.75	17'-11 1/4"	3 1/2 K @ 3'-4" = 11'-8"	12	A242	.75	1'-10 7/8"	1		

ES END: TRUSS DESIGNATION	WE	INCLINED "ST" STRUT				WEB "Wc"				
		MK	TYPE STEEL	DIA	LENGTH	MK.	TYPE STEEL	DIA.	PCS.	LENGTH
24T12-1911	1'-6 1/2"	2	A242	.75	1'-11 3/4"	4	A242	.75	1	2'-5 1/2"

EL END: TRUSS DESIGNATION	BEARING ANGLES				EXL	DIAGONAL "T" STRUT				VERTICAL "ST" STRUT				END STIFFENER MK V7			
	MK	TYPE STEEL	CHORD SIZE	LENGTH		MK.	TYPE STEEL	DIA	LENGTH	MK.	TYPE STEEL	DIA	LENGTH	TYPE STEEL	DIA	LENGTH	NO. REQ'D
24T12-1911	9	A242	1 1/2"x1 1/4"x.230"	8'-8"	6'-7 1/2"	—	—	—	—	2	A242	.75	1'-11 3/4"	A242	.75	2 7/8"	10

SKILLING - HELLE CHRISTIANSEN - ROBERTSON
Structural & Civil Engineers
7/5/68 SK

NO.	DATE	REVISION	BY
△1	6-26-68	FILLER SIZE, BOTTOM CHORD LENGTH	T.M.C.

BRIDGING TRUSS DETAILS
FOR
WORLD TRADE CENTER - N.Y.C.
FOR
THE PORT OF NEW YORK AUTHORITY

BRIDGING TRUSS 24T12 x 19'-11" LONG
WORLD TRADE CENTER TOWERS A-B

FABRICATION BY LACLEDE STEEL COMPANY

FABRICATED AT MADISON, ILLINOIS	DESIGN DRAWING NO. 7-AB2-7 PLATE
APPROVED FOR FABRICATION BY - FOR P.O.N.Y.A. DATE	DRAWN BY: [illegible] DATE FEB. 24, 1968
APPROVED FOR FABRICATION BY FOR FABRICATOR DATE	CHECKED BY: J.R. PAUL DATE FEB. 24, 1968 — IN CHARGE OF PROD. DEV.
DETAILED BY A.C. WEBER	FABRICATION CONT. NO. W.T.C. 221 — SHEET NO. BT212

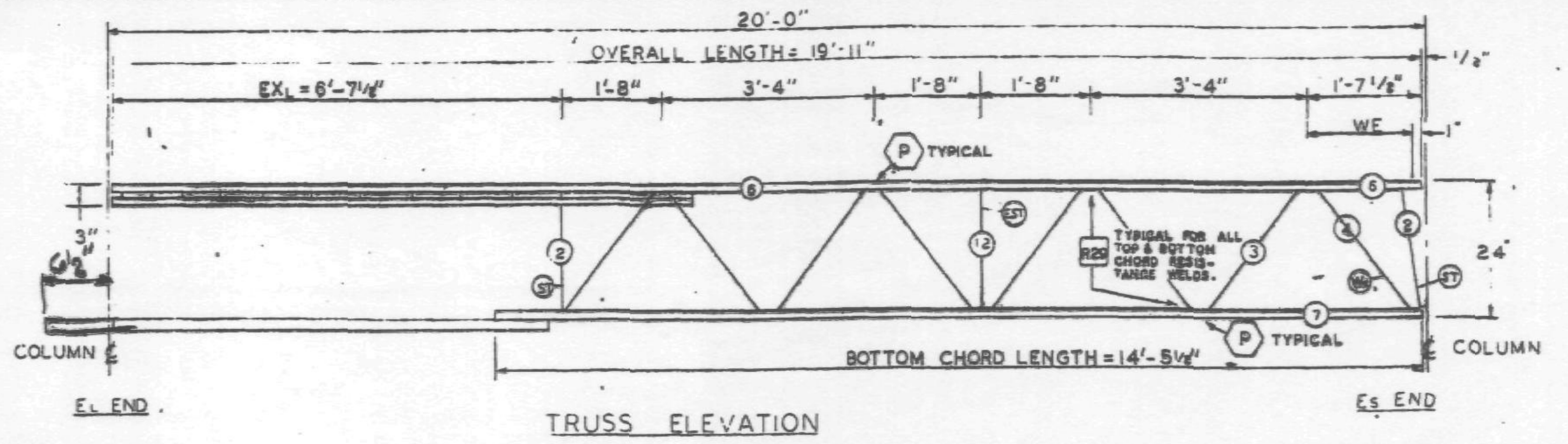

TRUSS ELEVATION

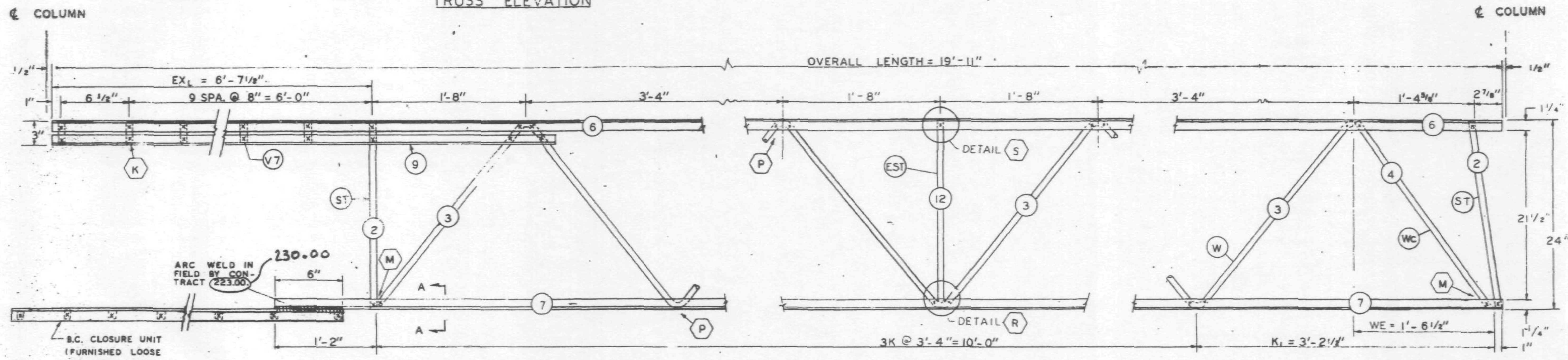

ELEVATION AT EL END

ELEVATION AT ADDED STRUT

ELEVATION AT ES END

ALL PANEL POINTS RESISTANCE WELDED (X).
ALL WELDS INDICATED AT SHADED AREAS AND AT BOTTOM CHORD WEB SPLICES
ALL WELD DETAILS SHOWN ON SHEETS ST290, ST291, AND ST292.

SEE SHEET CD204 FOR B.C. CLOSURE CONNECTION DETAIL.
LETTERS IN HEXAGON INDICATE WELD DETAIL, ie. (A).
LETTERS AND NUMBERS IN SQUARES INDICATE RESISTANCE WELD STRENGTH IDENTIFIED IN THE QUALITY CONTROL PROGRAM, ie., R29.

FABRICATION REQUIRMENTS	DESIGN	TOLERANCE
CAMBER AT MIDSPAN	0"	+ ⅜"
DESIGN DEPTH	24"	± ⅛"
PANEL "K"	3'-4"	± ⅛"
PANEL "K1"	3'-2⅛"	± ¼"
WEB DEPTH	23½"	± ⅛"
OVERALL LENGTH	19'-11"	± ⅛"

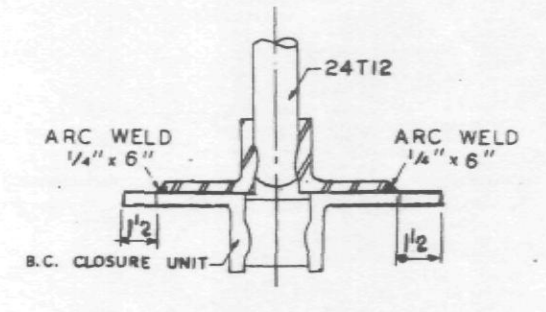

SECTION A-A

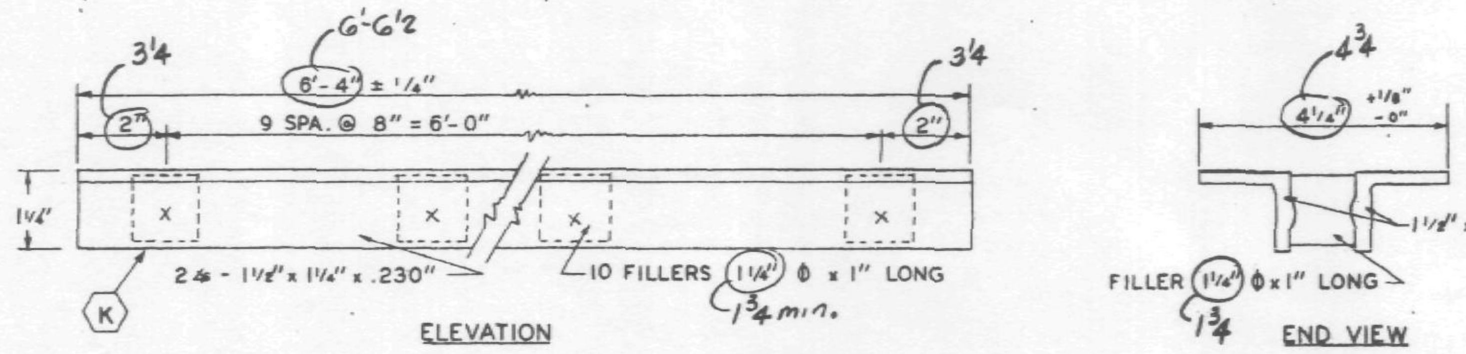

B.C. CLOSURE UNIT

REF. DWG.

7-AB2-1	2-15-68
7-AB2-7	2-15-68
7-AB4-15.1	10-27-67
7-AB4-16.18 & 19	1-3-68
7-AB4-28.38 & 41	1-3-68

MATERIAL LIST FOR B.C. CLOSURE UNIT		
PCS.	SIZE	LENGTH
2	1½"x1¼"x.23"	6'-4"
10	1¼" ϕ FILLERS (1¾ min)	1"

PAINT
LACLEDE ELECTROCOAT
RED NO 10001

TRUSS DESIGNATION	TOP CHORD TWO ANGLES				BOTTOM CHORD TWO ANGLES				MAIN WEB "W"					VERTICAL "EST" STRUT					TRUSS DATA	
	MK.	TYPE STEEL	CHORD SIZE	LENGTH	MK.	TYPE STEEL	CHORD SIZE	LENGTH	MK	TYPE STEEL	DIA.	LENGTH	NO OF K	MK	TYPE STEEL	DIA	LENGTH	NUMBER REQUIRED		
24T12-1911	6	A242	1½"x1¼"x.230"	19'-11"	7	A242	1½"x1¼"x.230"	14'-5½"	3	A242	.75	17'-11¼"	3½K @ 3'-4" = 11'-8"	12	A242	.75	1'-10⅛"	1		

ES END	TRUSS DESIGNATION	WE	INCLINED "ST" STRUT				WEB "WC"				
			MK	TYPE STEEL	DIA	LENGTH	MK.	TYPE STEEL	DIA.	PCS.	LENGTH
	24T12-1911	1'-6½"	2	A242	.75	1'-11¾"	4	A242	.75	1	2'-5½"

EL END	TRUSS DESIGNATION	BEARING ANGLES				EXL	DIAGONAL "T" STRUT				VERTICAL "ST" STRUT				END STIFFENER MK V7			
		MK.	TYPE STEEL	CHORD SIZE	LENGTH		MK.	TYPE STEEL	DIA	LENGTH	MK.	TYPE STEEL	DIA.	LENGTH	TYPE STEEL	DIA	LENGTH	NO. REQ'D
	24T12-1911	9	A242	1½"x1¼"x.230"	8'-8"	6'-7½"	–	—	–	—	2	A242	.75	1'-11¾"	A242	.75	2⅞"	10

SKILLING-HELLE CHRISTIANSEN ROBERTSON
Structural & Civil Engineers
SK

BRIDGING TRUSS DETAILS
FOR
WORLD TRADE CENTER - N.Y.C.
FOR
THE PORT OF NEW YORK AUTHORITY

BRIDGING TRUSS 24T12 x 19'-11" LONG
WORLD TRADE CENTER TOWERS A-B

FABRICATION BY LACLEDE STEEL COMPANY	
FABRICATED AT MADISON, ILLINOIS	DESIGN DRAWING NO. 7-AB2-7 PLATE
APPROVED FOR FABRICATION BY ____ FOR PONYA DATE	DRAWN BY: ___ DATE FEB. 24, 1968
APPROVED FOR FABRICATION BY ____ FOR FABRICATOR DATE	CHECKED BY: J.R. PAUL DATE FEB. 24, 1968 — IN CHARGE OF PROD. DEV.
LACLEDE STEEL CO. DETAILED BY A.C. WEBER	FABRICATION CONT. NO. W.C. 221 — SHEET NO BT212

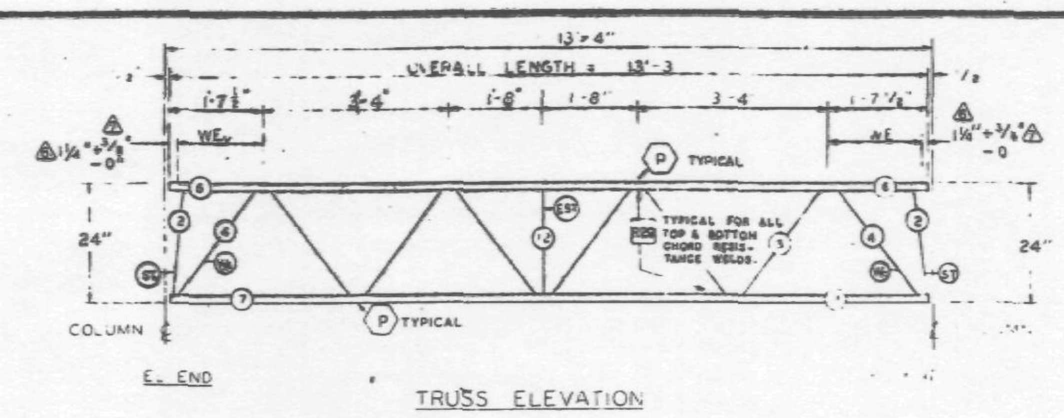

TRUSS ELEVATION

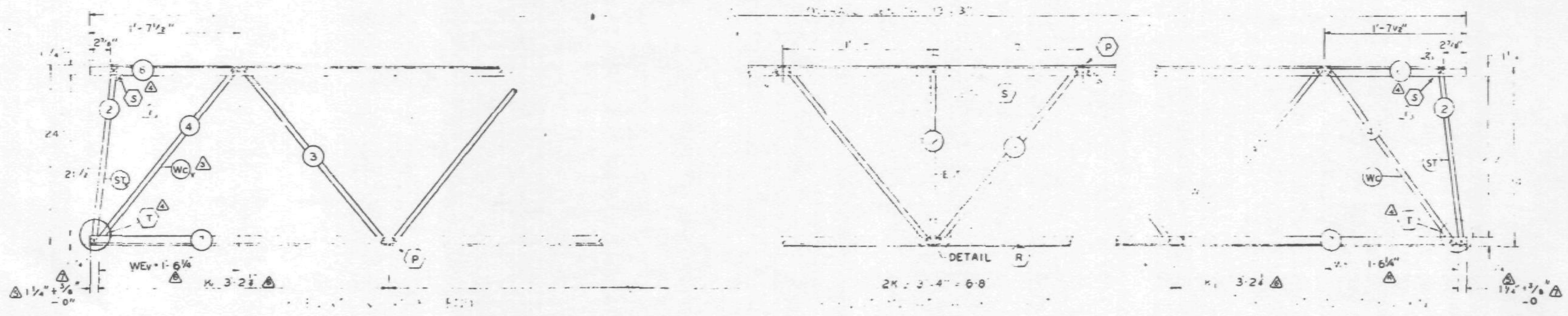

FABRICATION REQUIRMENTS		
	DESIGN	TOLERANCE
CAMBER AT MIDSPAN	0"	± 3/8"
DESIGN DEPTH	24"	± 1/4"
PANEL "K"	3'-4"	± 1/4"
PANEL "K1"	3'-2½"	± 1/4"
WEB LENGTH	23⅞"	± 1/4"
OVERALL LENGTH	13'-3"	± 3/8"

ALL PANEL POINTS RESISTANCE WELDED (X). ARC WELDS INDICATED AT SHADED AREAS AND AT BOTTOM CHORD WEB SPLICES ( ). ALL WELD DETAILS SHOWN ON SHEETS ST290 AND ST291.

LETTERS IN HEXAGON INDICATE WELD DETAIL, ie. (A). LETTERS AND NUMBERS IN SQUARES INDICATE RESISTANCE WELD STRENGTH IDENTIFIED IN THE QUALITY CONTROL PROGRAM, ie. R29.

REF DRWG

[illegible]	4-1-68
ABZ 8	2-15-68
7-AB4 15 & 19	1-3-68
7-AB4 16, 18	5-6-68
7-AB4 28 & 41	[illegible]
7-AB4 - 38	4-1-68

TRUSS DESIGNATION		TOP CHORD TWO ANGLE					BOTTOM CHORD TWO ANGLE					MAIN WEB						VERTICAL "EST" STRUT			NUMBER REQUIRED
24T13	133	5	A242	[illegible]	[illegible]	13'-3"	2	A242	[illegible]	[illegible]	13'-3"	3	A242	.75	15'-4"	3K	3-4 = 10'-0"	A242	.75	[illegible]	1

ES END TRUSS DESIGNATION		WE	INCLINED "ST" STRUT MK	TYPE STEEL	DIA	LENGTH	WEB "WC" MK	TYPE STEEL	PCS.	DIA.	LENGTH
24T13	133	1'-6¼"	2	A242	.75	[illegible]	4	A242	1	.75	2'-5½"

EL END TRUSS DESIGNATION		BEARING ANGLES MK	TYPE STEEL	CHORD SIZE	LENGTH	WEv	DIAGONAL "T" STRUT MK	TYPE STEEL	DIA	LENGTH	INCLINED "STv" STRUT MK	TYPE STEEL	DIA	LENGTH	END STIFFENER TYPE STEEL	DIA	LENGTH	TYPE STEEL	DIA	LENGTH	WEB "WCv" MK	TYPE STEEL	PCS.	DIA	LENGTH
24T13	133	–	–	—	—	1-6¼"	–	–	–	—	2	A242	.75	1'-11½"	–	–	—	—	–	—	4	A242	1	.75	2'-5½"

NO	DATE	REVISION	BY
7	8-29-68	END DIST. (2)	T.M.C.
6	8-28-68	AS NOTED	T.M.C.
5	7-27-68	END DIST. (2)	T.M.C.
4	7-8-68	AS NOTED	T.M.C.
3	6-26-68	LENGTH OF "EST", WCv. REF. DRWG.	T.M.C.
2	4-25-68	WEB DIMENSIONS	T.M.C.
1	3-19-68	WEB	J.R.P.

BRIDGING TRUSS 24T13 13'-3" LONG

WORLD TRADE CENTER TOWERS A B

LACLEDE STEEL COMPANY

MADISON, ILLINOIS

ABZ 8

James White 9/4/68

FEB 24

FEB 24 1968

LACLEDE STEEL CO.

221

BT213

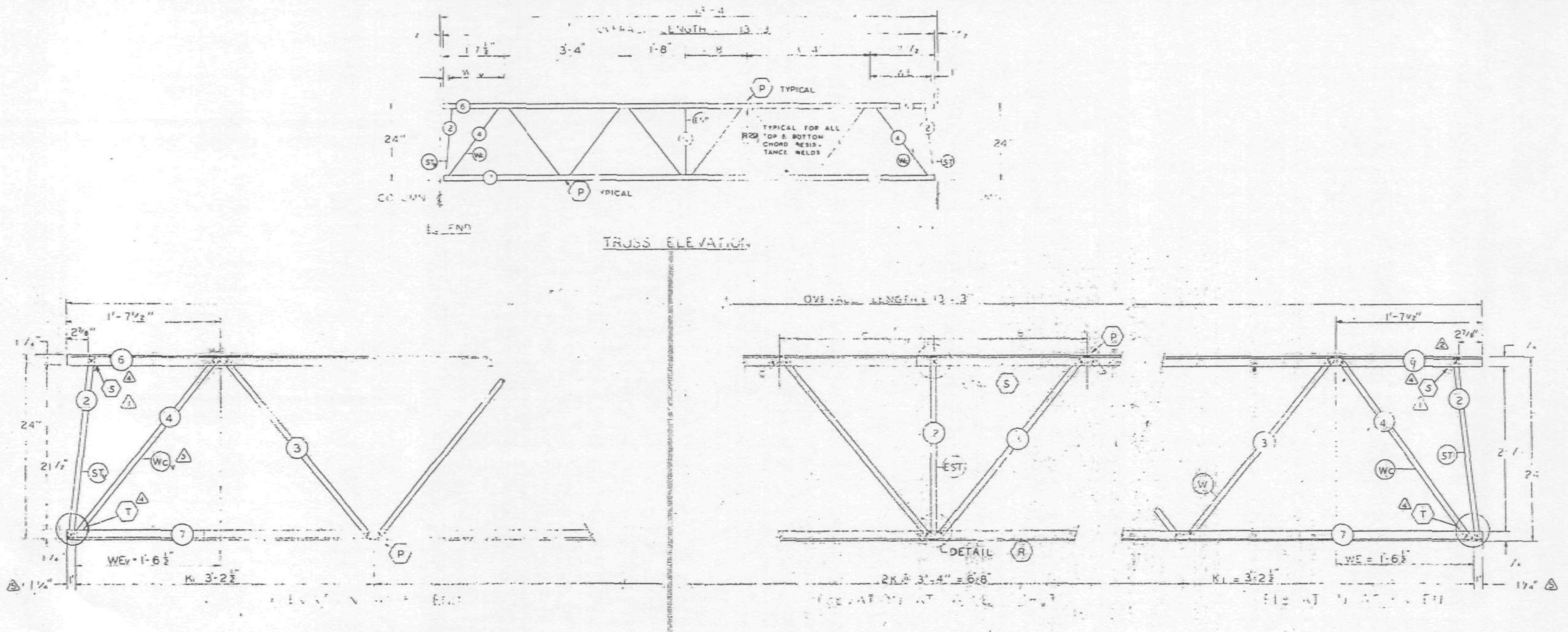

DESIGN LENGTH	24"	
	3'-4"	4
PANEL "K1"	3'-2½"	4
	23 ⅞	4
OVERALL LENGTH	13'-3"	8

ALL PANEL POINTS RESISTANCE WELDED (x). ARC WELDS INDICATED AT SHADED AREAS AND AT BOTTOM CHORD WEB SPLICES. ALL WELD DETAILS SHOWN ON SHEETS ST290 AND ST291.

1. LETTERS IN HEXAGON INDICATE WELD DETAIL, i.e. (A). LETTERS AND NUMBERS IN SQUARES INDICATE RESISTANCE WELD STRENGTH IDENTIFIED IN THE QUALITY CONTROL PROGRAM, i.e. [R29].

REF. DRWG.	
7-A82-	4-1-68
7-A82-8	2-5-68
7-A84-15, 19	1-3-68
7-A84-16, 18	5-6-68
7-A84-28 & 41	
7-A84-38	4-1-68

PAINT
LACLEDE ELECTROCOAT
RED

TRUSS DESIGNATION	TOP CHORD TWO ANGLES				BOTTOM CHORD TWO ANGLES				MAIN WEB "W"					VERTICAL "EST" STRUT				NUMBER REQUIRED
	MK	TYPE STEEL	SIZE	LENGTH	MK	TYPE STEEL	SIZE	LENGTH	MK	TYPE STEEL	DIA	LENGTH		MK	TYPE STEEL	DIA	LENGTH	
24T13-133	5	A242		13'-3"	7	A242		13'-3"	3	A242	.75	15'-4½"	3K = 3'-4" = 10'-0"	12	A242	.75		1

TRUSS DESIGNATION	WE	INCLINED ST STRUT				WEB "Wc"				
		MK	TYPE STEEL	DIA	LENGTH	MK	TYPE STEEL	PCS	DIA	LENGTH
24T13-133	1'-6½"	2	A242	.75		4	A242	1	.75	2'-5½"

TRUSS DESIGNATION	BEARING ANGLES				WEv	DIAGONAL STRUT			INCLINED STv STRUT				END STIFFENER						WEB "Wcv" ⚠3				
	MK	TYPE STEEL	SIZE	LENGTH		TYPE STEEL	DIA	LENGTH	MK	TYPE STEEL	DIA	LENGTH	TYPE STEEL	DIA	LENGTH	TYPE STEEL	DIA	LENGTH	MK	TYPE STEEL	PCS	DIA	LENGTH
24T13-133	—	—	—	—	6½	—	—	—	2	A242	.75	1'-11½"	—	—	—	—	—	—	4	A242	1	.75	2'-5½"

NO	DATE	REVISION	BY
⚠5	7-27-68	END DIST. (2)	T.M.C.
⚠4	7-8-68	AS NOTED	T.M.C.
⚠3	6-26-68	LENGTH OF "EST" WCv. REF. DRWG.	T.M.C.
2	4-25-68	WEB DIMENSIONS	T.M.C.
1	3-19-68	WEB	

BRIDGING TRUSS 24T13, 13'-3"
WORLD TRADE CENTER TOWERS A, B

Wab 8/2/68

ST 2

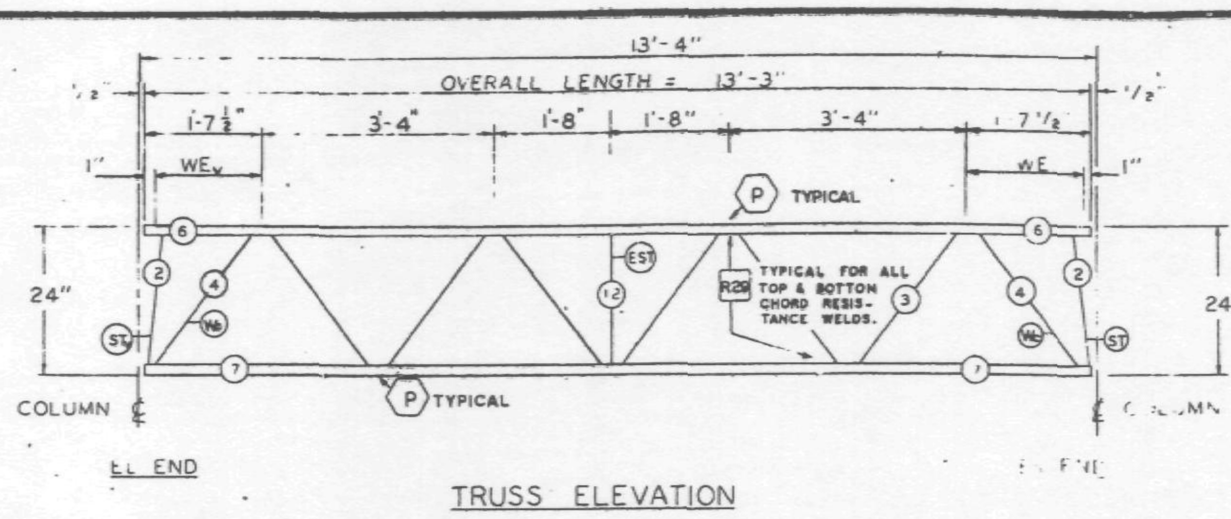

TRUSS ELEVATION

FABRICATION REQUIRMENTS		
	DESIGN	TOLERANCE
CAMBER AT MIDSPAN	0"	± 3/8"
DESIGN DEPTH	24"	± 1/4"
PANEL "K"	3'-4"	± 1/4"
PANEL "K1"	3'-2½"	± 1/4"
WEB DEPTH	23 7/8"	± 1/4"
OVERALL LENGTH	13'-3"	± 3/8"

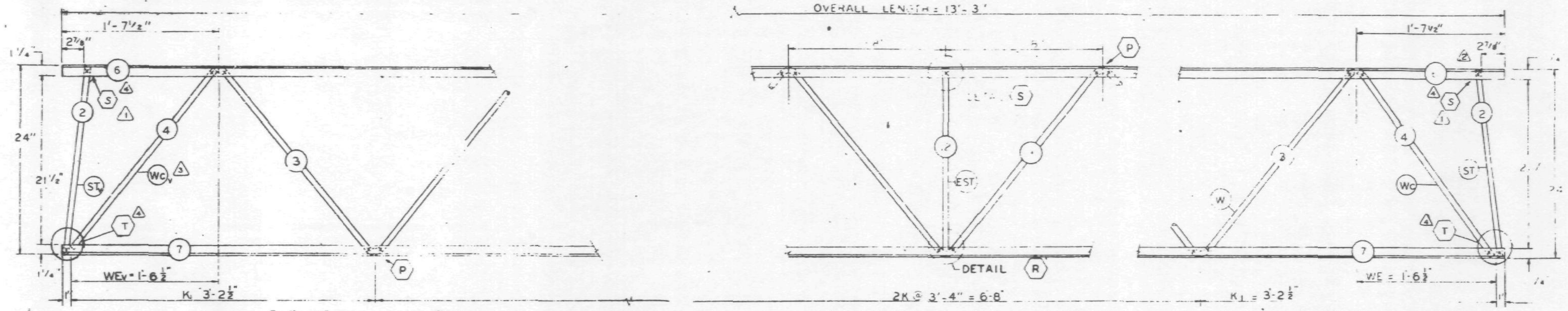

ALL PANEL POINTS RESISTANCE WELDED (X). ARC WELDS INDICATED AT SHADED AREAS AND AT BOTTOM CHORD WEB SPLICES. ALL WELD DETAILS SHOWN ON SHEETS ST290 AND ST291.

LETTERS IN HEXAGON INDICATE WELD DETAIL, i.e. (A). LETTERS AND NUMBERS IN SQUARES INDICATE RESISTANCE WELD STRENGTH IDENTIFIED IN THE QUALITY CONTROL PROGRAM, i.e. [R29].

△3 REF. DRWG.	
7-AB2-1	4-1-68
7-AB2-8	2-15-68
7-AB4-15,1,19	1-3-68
7-AB4-16,18	5-6-68
7-AB4-28 & 41	1-3-68
7-AB4-38	4-1-68

PAINT
LACLEDE ELECTROCOAT
RED NO. C001

TRUSS DESIGNATION	TOP CHORD TWO ANGLES				BOTTOM CHORD TWO ANGLES				MAIN WEB "W"					VERTICAL "EST" STRUT				
	MK	TYPE STEEL	CHORD SIZE	LENGTH	MK	TYPE STEEL	CHORD SIZE	LENGTH	MK	TYPE STEEL	DIA	LENGTH	NO. OF K	MK	TYPE STEEL	DIA	LENGTH △4	NUMBER REQUIRED
24T13-133	6	A242	1½" x 1¼ x 230	13'-3"	7	A242	1½ x 1¼ x 230	13'-3"	3	A242	75	15'-4½"	3K @ 3'-4" = 10'-0"	12	A242	.75	1'-10 7/8"	1

ES END	TRUSS DESIGNATION	WE	INCLINED "ST" STRUT				WEB "Wc"				
			MK	TYPE STEEL	DIA	LENGTH	MK.	TYPE STEEL	PCS.	DIA.	LENGTH
	24T13-133	1'-6½"	2	A242	75	1'-11¾"	4	A242	1	.75	2'-5½"

EL END	TRUSS DESIGNATION	BEARING ANGLES				WEv	DIAGONAL "T" STRUT				INCLINED "STv" STRUT				END STIFFENER MK. V5			END STIFFENER MK. V6			WEB "Wcv" △3				
		MK.	TYPE STEEL	CHORD SIZE	LENGTH		MK.	TYPE STEEL	DIA	LENGTH	MK	TYPE STEEL	DIA	LENGTH	TYPE STEEL	DIA	LENGTH	TYPE STEEL	DIA	LENGTH	MK.	TYPE STEEL	PCS.	DIA.	LENGTH
	24T13-133	—	—	—	—	1'-6½"	—	—	—	—	2	A242	.75	1'-11½"	—	—	—	—	—	—	4	A242	1	.75	2'-5½"

NO.	DATE	REVISION	BY
△4	7-8-68	AS NOTED	T.M.C.
△3	6-26-68	LENGTH OF "EST", WCv. REF. DRWG.	T.M.C.
△2	4-25-68	WEB DIMENSIONS	T.M.C.
△1	3-19-68	WEB	J.R.P.

BRIDGING TRUSS DETAILS
FOR
WORLD TRADE CENTER - N.Y.C.
FOR
THE PORT OF NEW YORK AUTHORITY

BRIDGING TRUSS 24T13 x 13'-3" LONG
WORLD TRADE CENTER TOWERS A-B

LACLEDE STEEL COMPANY
AT MADISON, ILLINOIS

DESIGN DRAWING NO. 7-AB2-8 PLATE
APPROVED FOR FABRICATION BY JW DATE 7/24/68
DRAWN BY J.R. DATE FEB 24 1968
CHECKED BY J.R. PAUL DATE FEB 24 1968
IN CHARGE OF PROD. DEV.
FABRICATION CONT. NO. W.T.C. 221
SHEET NO. BT213

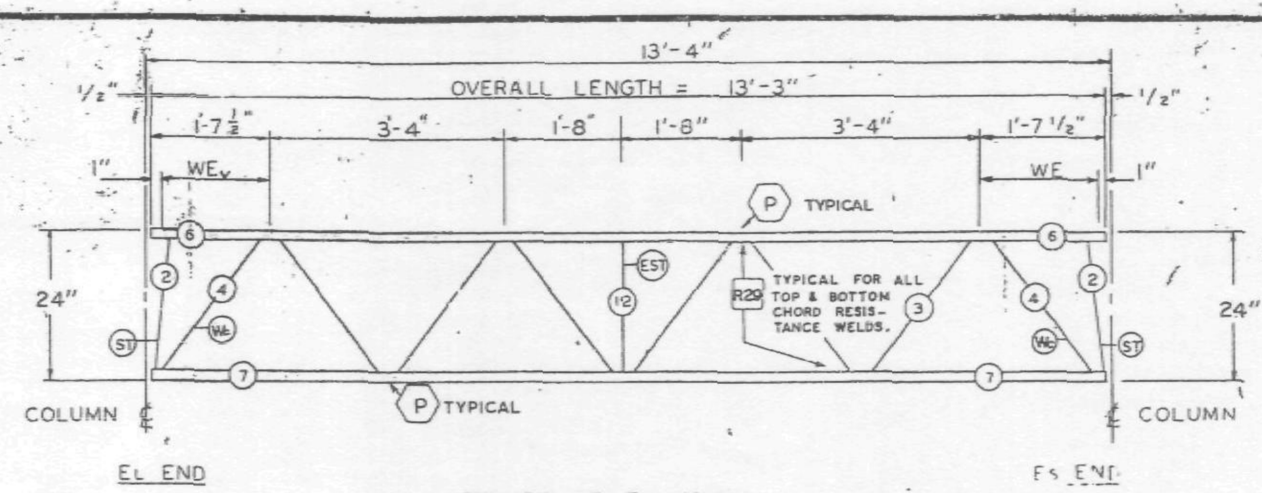

TRUSS ELEVATION

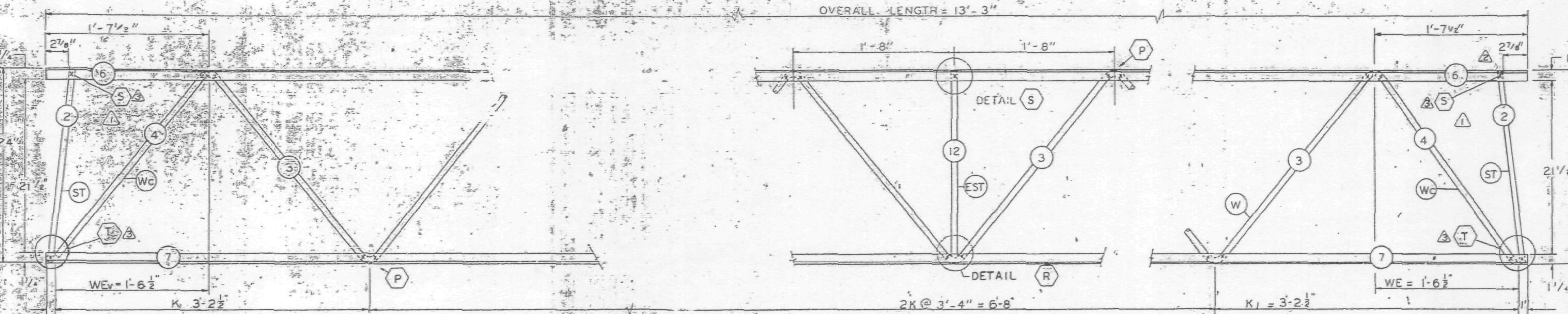

ELEVATION AT EL END

ELEVATION AT ADDED STRUT

ELEVATION AT Es END

FABRICATION REQUIRMENTS		
	DESIGN	TOLERANCE
CAMBER AT MIDSPAN	0"	± 3/8"
DESIGN DEPTH	24"	± 1/4"
PANEL "K"	3'-4"	± 1/4"
PANEL "K1"	3'-2 1/2"	± 1/4"
WEB DEPTH	23 7/8"	± 1/4"
OVERALL LENGTH	13'-3"	± 3/8"

ALL PANEL POINTS RESISTANCE WELDED (x). ARC WELDS INDICATED AT SHADED AREAS AND AT BOTTOM CHORD WEB SPLICES (▬). ALL WELD DETAILS SHOWN ON SHEETS ST290 AND ST291.

⚠1 LETTERS IN HEXAGON INDICATE WELD DETAIL, ie. (A). LETTERS AND NUMBERS IN SQUARES INDICATE RESISTANCE WELD STRENGTH IDENTIFIED IN THE QUALITY CONTROL PROGRAM, ie., [R29].

REF. DRWG.

7-A82-1	2-15-68
7-A82-8	2-15-68
7-A84-15:1	10-27-67
7-A84-16 18 & 19	1-3-68
7-A84-28 38 & 41	1-3-68

PAINT
LACLEDE ELECTROCOAT
RED NO 10001

TRUSS DESIGNATION	TOP CHORD TWO ANGLES				BOTTOM CHORD TWO ANGLES				MAIN WEB "W"					VERTICAL "EST" STRUT				
	MK	TYPE STEEL	CHORD SIZE	LENGTH	MK	TYPE STEEL	CHORD SIZE	LENGTH	MK	TYPE STEEL	DIA	LENGTH	NO OF K	MK	TYPE STEEL	DIA	LENGTH	NUMBER REQUIRED
24T13-133	6	A242	1 1/2" x 1 1/4" x .230	13'-3"	7	A242	1 1/2" x 1 1/4" x .230	13'-3"	3	A242	.75	15'-4 1/2"	3K @ 3'-4" = 10'-0"	12	A242	75	1'-10 1/8"	1

Es END	TRUSS DESIGNATION	WE	INCLINED "ST" STRUT				WEB "Wc"				
			MK	TYPE STEEL	DIA	LENGTH	MK	TYPE STEEL	PCS.	DIA.	LENGTH
	24T13-133	1'-6 1/2"	2	A242	75	1'-11 3/4"	4	A242	1	.75	2'-5 1/2"

EL END	TRUSS DESIGNATION	BEARING ANGLES				WEv	DIAGONAL "T" STRUT				INCLINED "ST" STRUT				END STIFFENER MK V5			END STIFFENER MK V6			WEB "Wc"				
		MK	TYPE STEEL	CHORD SIZE	LENGTH		MK	TYPE STEEL	DIA	LENGTH	MK	TYPE STEEL	DIA	LENGTH	TYPE STEEL	DIA	LENGTH	TYPE STEEL	DIA	LENGTH	MK	TYPE STEEL	PCS.	DIA.	LENGTH
	24T13-133	–	–	–	–	1'-6 1/2"	–	–	–	–	2	A242	.75	1'-11 3/4"	–	–	–	–	–	–	4	A242	1	.75	2'-5 1/2"

NO.	DATE	REVISION	BY
⚠3	7-8-68	AS NOTED	T.M.C.
⚠2	4-25-68	WEB DIMENSIONS	T.M.C.
⚠1	3-19-68	WEB	J.R.P.

BRIDGING TRUSS DETAILS
FOR
WORLD TRADE CENTER - N.Y.C.
FOR
THE PORT OF NEW YORK AUTHORITY

BRIDGING TRUSS 24T13 x 13'-3" LONG
WORLD TRADE CENTER TOWERS A-B

FABRICATION BY LACLEDE STEEL COMPANY
FABRICATED AT MADISON, ILLINOIS
DESIGN DRAWING NO 7-A82-8 PLATE
APPROVED FOR FABRICATION BY JW FOR PONYA DATE 7/9/68
DRAWN BY J.R. DATE FEB 24, 1968
APPROVED FOR FABRICATION BY FOR FABRICATOR DATE
CHECKED BY J.R. PAUL DATE FEB 24, 1968
IN CHARGE OF PROD. DEV.
STAMPED BY A. C. WEBER
FABRICATION CONT NO W.T.C. 221
SHEET NO BT213

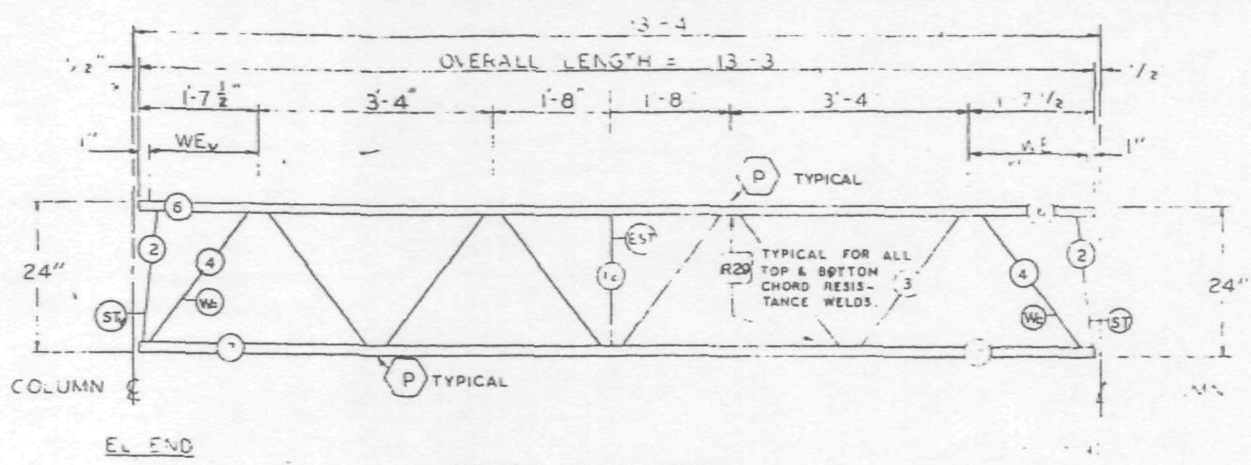

TRUSS ELEVATION

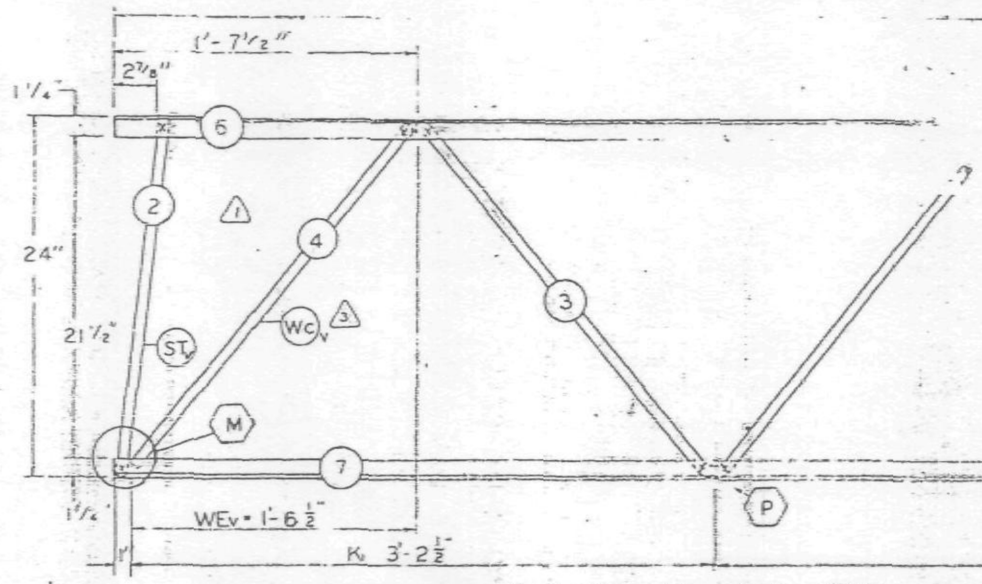

ELEVATION AT EL END

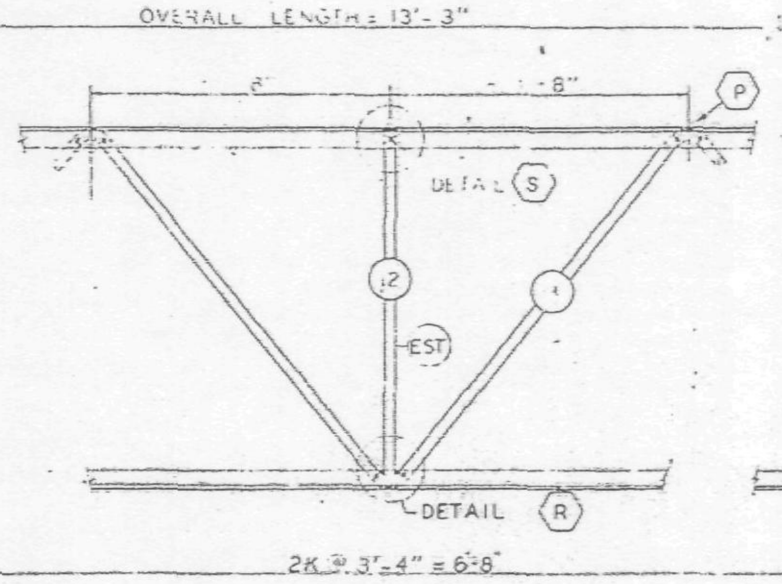

ELEVATION AT [illegible] STRUT

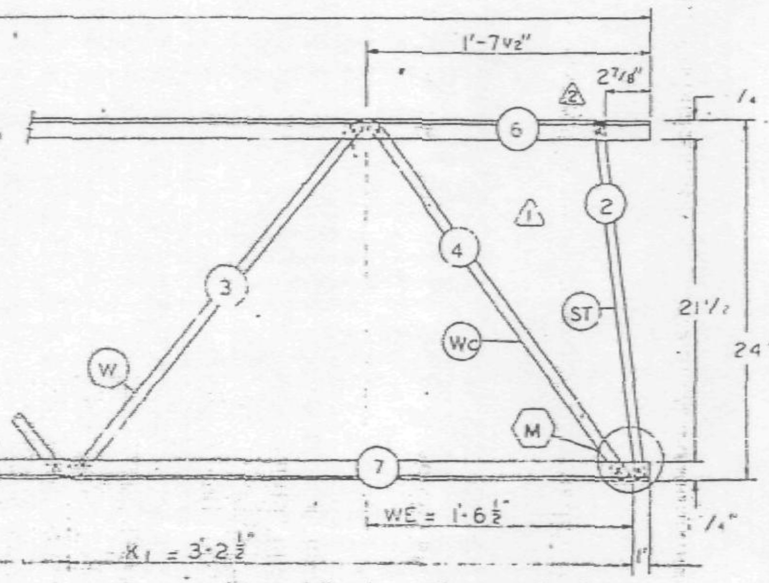

FABRICATION REQUIRMENTS		
	DESIGN	TOLERANCE
CAMBER AT MIDSPAN	0"	± 3/8"
DESIGN DEPTH	24"	± 1/4"
PANEL "K"	3'-4"	± 1/4"
PANEL "K1"	3'-2 1/2"	± 1/4"
WEB DEPTH	23 7/8"	± 1/4"
OVERALL LENGTH	13'-3"	± 3/8"

ALL PANEL POINTS RESISTANCE WELDED (X). ARC WELDS INDICATED AT SHADED AREAS AND AT BOTTOM CHORD WEB SPLICES ([illegible]). ALL WELD DETAILS SHOWN ON SHEETS ST290 AND ST291.

△1 LETTERS IN HEXAGON INDICATE WELD DETAIL, ie., (A). LETTERS AND NUMBERS IN SQUARES INDICATE RESISTANCE WELD STRENGTH IDENTIFIED IN THE QUALITY CONTROL PROGRAM, ie., R29.

TRUSS DESIGNATION	TOP CHORD TWO ANGLES				BOTTOM CHORD TWO ANGLES				MAIN WEB "W"					VERTICAL "EST" STRUT				
	MK	TYPE STEEL	CHORD SIZE	LENGTH	MK	TYPE STEEL	CHORD SIZE	LENGTH	MK	TYPE STEEL	DIA	LENGTH	NO OF K	MK	TYPE STEEL	DIA	LENGTH △3	NUMBER REQUIRED
24T13-133	6	A242	1 1/2" x 1 1/4 x 230	13'-3"	7	A242	1 1/2" x 1 1/4 x 230	13'-3"	3	A242	.75	15'-4 1/2"	3K @ 3'-4" = 10'-0"	12	A242	.75	1'-0 7/8"	1

Es END	TRUSS DESIGNATION	WE	INCLINED "ST" STRUT				WEB "Wc"				
			MK	TYPE STEEL	DIA	LENGTH	MK.	TYPE STEEL	PCS.	DIA.	LENGTH
	24T13-133	1'-6 1/2"	2	A242	.75	1'-11 3/4"	4	A242	1	.75	2'-5 1/2"

EL END	TRUSS DESIGNATION	BEARING ANGLES				WEv	DIAGONAL "T" STRUT				INCLINED "STv" STRUT				END STIFFENER						WEB "Wcv" △3				
		MK	TYPE STEEL	CHORD SIZE	LENGTH		MK.	TYPE STEEL	DIA	LENGTH	MK	TYPE STEEL	DIA	LENGTH	MK V5 TYPE STEEL	DIA	LENGTH	MK V6 TYPE STEEL	DIA	LENGTH	MK.	TYPE STEEL	PCS.	DIA.	LENGTH
	24T13-133	—	—	—	—	1'-6 1/2"	—	—	—	—	2	A242	.75	1'-11 1/2"	—	—	—	—	—	—	4	A242	1	.75	2'-5 1/2"

△3 REF. DRWG.

7-AB2-1	4-1-68
7-AB2-8	2-15-68
7-AB4-15 & 19	1-3-68
7-AB4-16, 18	5-6-68
7-AB4-28 & 41	1-3-68
7-AB4-38	4-1-68

PAINT
LACLEDE ELECTROCOAT
RED NO 10001

BRIDGING TRUSS DETAILS
FOR
WORLD TRADE CENTER - N Y C
FOR
THE PORT OF NEW YORK AUTHORITY

BRIDGING TRUSS 24T13 x 13'-3" LONG
WORLD TRADE CENTER TOWERS A-B

[illegible] LACLEDE STEEL COMPANY
[illegible] AT MADISON, ILLINOIS
DESIGN DRAWING NO 7-AB2-8 PLATE
[illegible] FOR FABRICATION [illegible] BY JW DATE 7/5/68
DRAWN BY [illegible] DATE FEB 24 1968
CHECKED BY J.R.PAU DATE FEB 24 1968
IN CHARGE OF PROJ. DEV.
FABRICATION CONT NO. 221
SHEET NO BT213

NO.	DATE	REVISION	BY
△3	6-26-68	LENGTH OF "EST", WCv. REF. DRWG.	T.M.C.
△2	4-25-68	WEB DIMENSIONS	T.M.C.
△1	3-19-68	WEB .	J.R.P.

FABRICATION REQUIRMENTS

	DESIGN	TOLERANCE
CAMBER AT MIDSPAN	0"	± 3/8"
DESIGN DEPTH	24"	± 1/8"
PANEL "K"	3'-4"	± 1/4"
PANEL "K1"	3'-2½"	± 1/8"
WEB DEPTH	[illegible]	± 1/4"
OVERALL LENGTH	13'-3"	± 3/8"

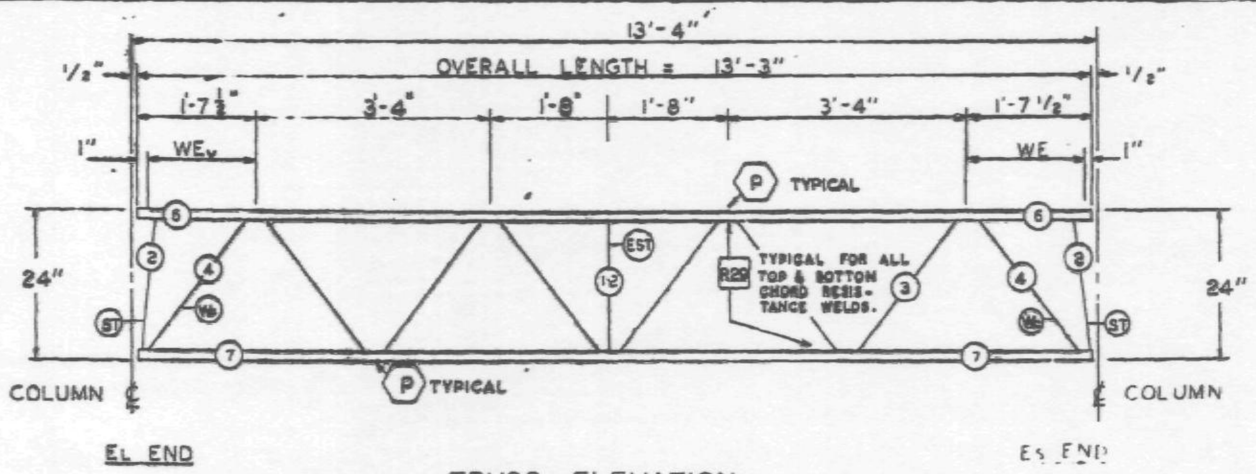

TRUSS ELEVATION

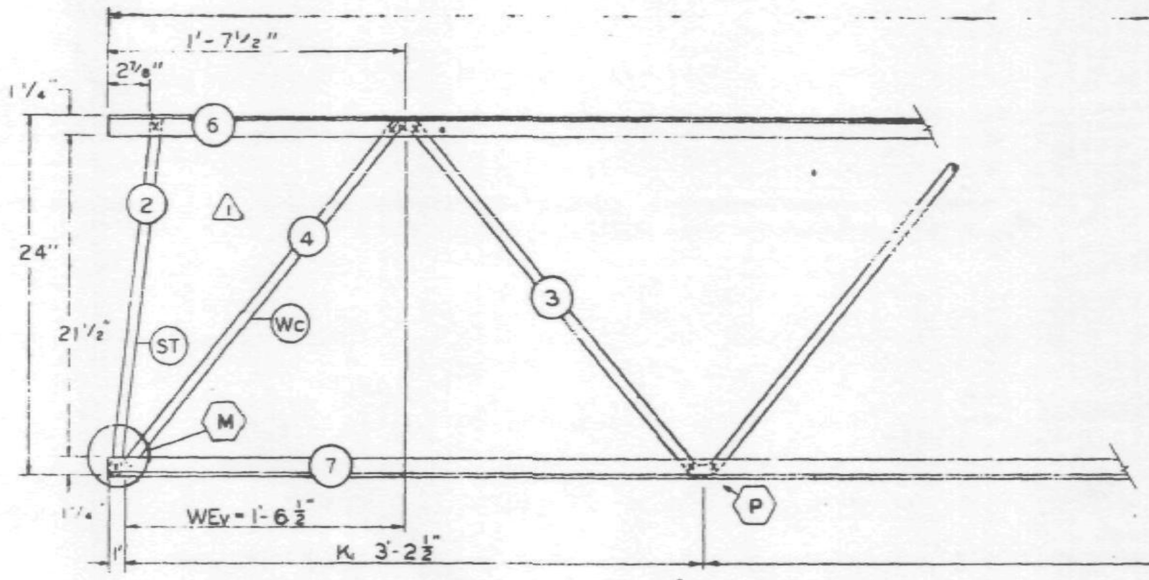

ELEVATION AT EL END

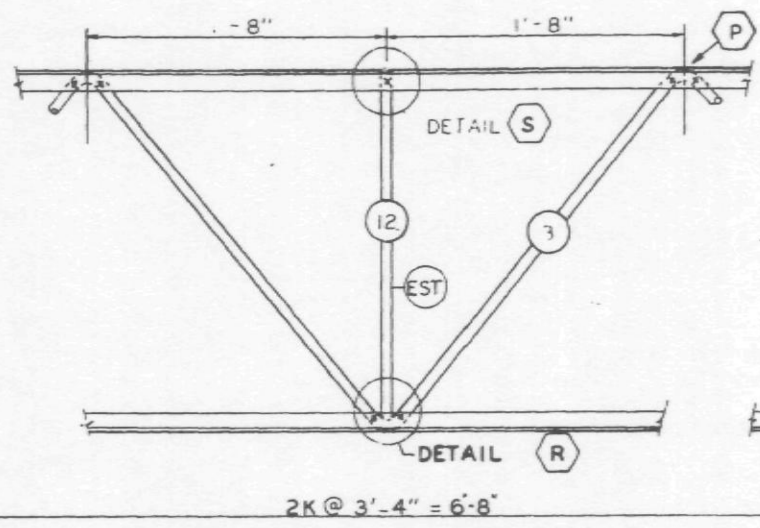

ELEVATION AT ADDED STRUT

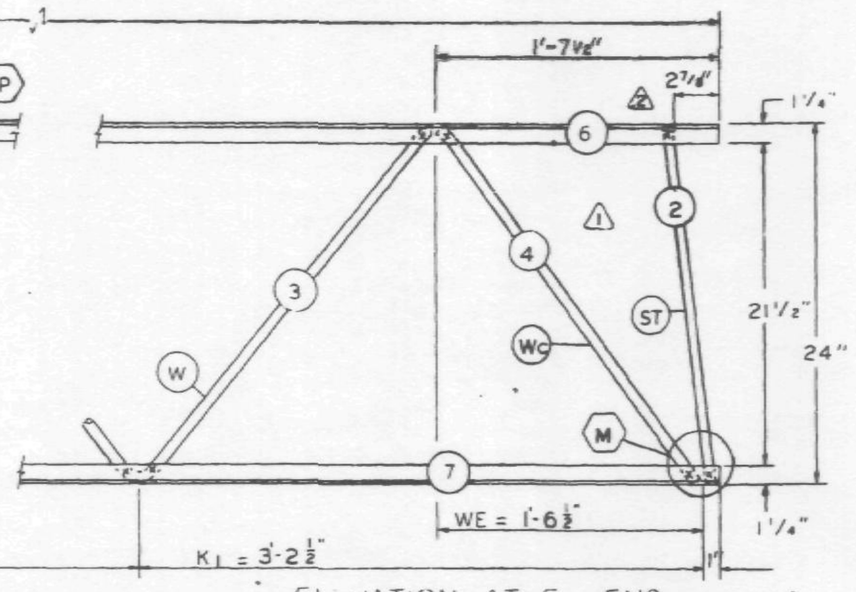

ELEVATION AT ES END

ALL PANEL POINTS RESISTANCE WELDED (X). ARC WELDS INDICATED AT SHADED AREAS AND AT BOTTOM CHORD WEB SPLICES (▬). ALL WELD DETAILS SHOWN ON SHEETS ST290 AND ST291.

⚠ LETTERS IN HEXAGON INDICATE WELD DETAIL, i.e. A. LETTERS AND NUMBERS IN SQUARES INDICATE RESISTANCE WELD STRENGTH IDENTIFIED IN THE QUALITY CONTROL PROGRAM, i.e., R29.

REF. DRWG.

7-AB2-1	2-15-68
7-AB2-8	2-15-68
7-AB4-15.1	10-27-67
7-AB4-16 18 & 19	1-3-68
7-AB4-28 38 & 41	1-3-68

PAINT
LACLEDE ELECTROCOAT
RED NO. 10001

TRUSS DESIGNATION	TOP CHORD TWO ANGLES				BOTTOM CHORD TWO ANGLES				MAIN WEB "W"					VERTICAL "EST" STRUT				
	MK	TYPE STEEL	CHORD SIZE	LENGTH	MK	TYPE STEEL	CHORD SIZE	LENGTH	MK	TYPE STEEL	DIA	LENGTH	NO OF K	MK	TYPE STEEL	DIA	LENGTH	NUMBER REQUIRED
24T13-133	6	A242	1½"x1¼"x.230	13'-3"	7	A242	1½"x1¼"x.230	13'-3"	3	A242	.75	15'-4½"	3K @ 3'-4" = 10'-0"	12	A242	.75	1'-10⅛"	1

ES END TRUSS DESIGNATION	WE	INCLINED "ST" STRUT				WEB "Wc"				
		MK	TYPE STEEL	DIA	LENGTH	MK.	TYPE STEEL	PCS.	DIA.	LENGTH
24T13-133	1'-6½"	2	A242	.75	1'-11¾"	4	A242	1	.75	2'-5½"

EL END TRUSS DESIGNATION	BEARING ANGLES				WEV	DIAGONAL "T" STRUT				INCLINED "ST" STRUT				END STIFFENER MK V5			END STIFFENER MK V6			WEB "Wc"				
	MK	TYPE STEEL	CHORD SIZE	LENGTH		MK.	TYPE STEEL	DIA	LENGTH	MK	TYPE STEEL	DIA	LENGTH	TYPE STEEL	DIA	LENGTH	TYPE STEEL	DIA	LENGTH	MK.	TYPE STEEL	PCS.	DIA.	LENGTH
24T13-133	–	—	—	—	1'-6½"	–	—	–	—	2	A242	.75	1'-11¾"	–	–	—	—	–	—	4	A242	1	.75	2'-5½"

NO.	DATE	REVISION	BY
2	4-25-68	WEB DIMENSIONS	T.M.C.
1	3-10-68	WEB	J.R.P.

BRIDGING TRUSS DETAILS
FOR
WORLD TRADE CENTER - N.Y.C
FOR
THE PORT OF NEW YORK AUTHORITY

BRIDGING TRUSS 24T13 x 13'-3" LONG
WORLD TRADE CENTER TOWERS A-B

FABRICATION BY LACLEDE STEEL COMPANY
FABRICATED AT MADISON, ILLINOIS
DESIGN DRAWING NO 7-AB2-8 PLATE
APPROVED FOR FABRICATION BY James White FOR P.O.N.Y.A DATE 5/1/68
DRAWN BY [illegible] DATE FEB 24, 1968
APPROVED FOR FABRICATION BY FOR FABRICATOR DATE
CHECKED BY J.R. PAUL DATE FEB 24, 1968
IN CHARGE OF PROD DEV
DETAILED BY A.C. WEBER
FABRICATION CONT NO W.T.C 221
SHEET NO BT213

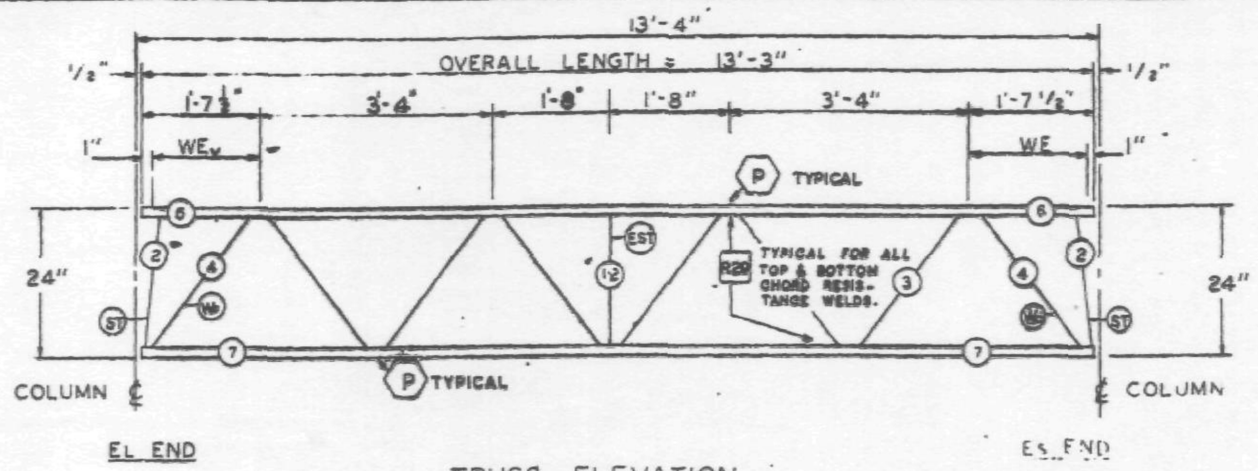

TRUSS ELEVATION

FABRICATION REQUIRMENTS		
	DESIGN	TOLERANCE
CAMBER AT MIDSPAN	0"	± 3/8"
DESIGN DEPTH	24"	± 1/4"
PANEL "K"	3'-4"	± 1/4"
PANEL "K1"	3'-2½"	± 1/4"
WEB DEPTH	23 7/8"	± 1/4"
OVERALL LENGTH	13'-3"	± 3/8'

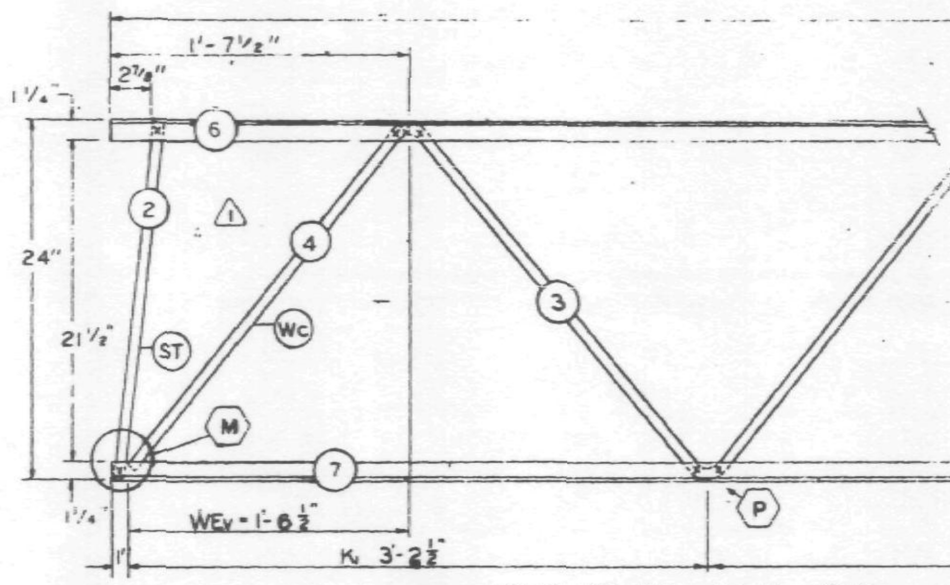

ELEVATION AT EL END

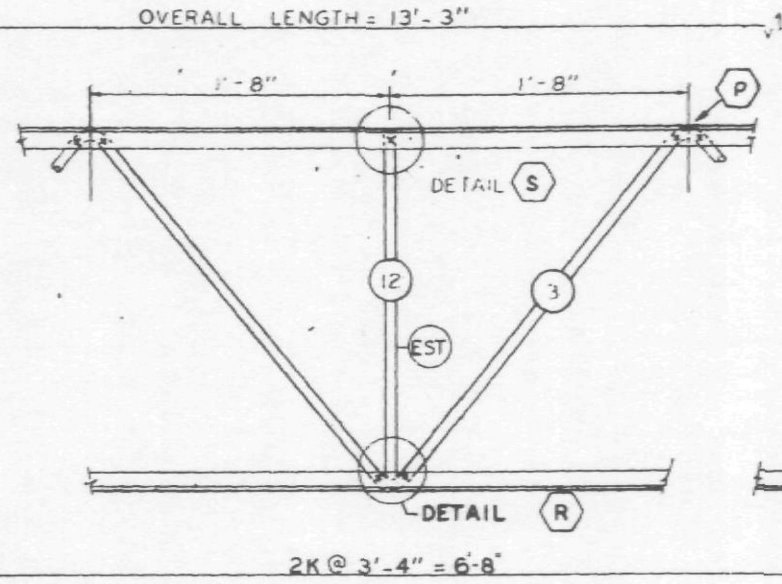

ELEVATION AT ADDED STRUT

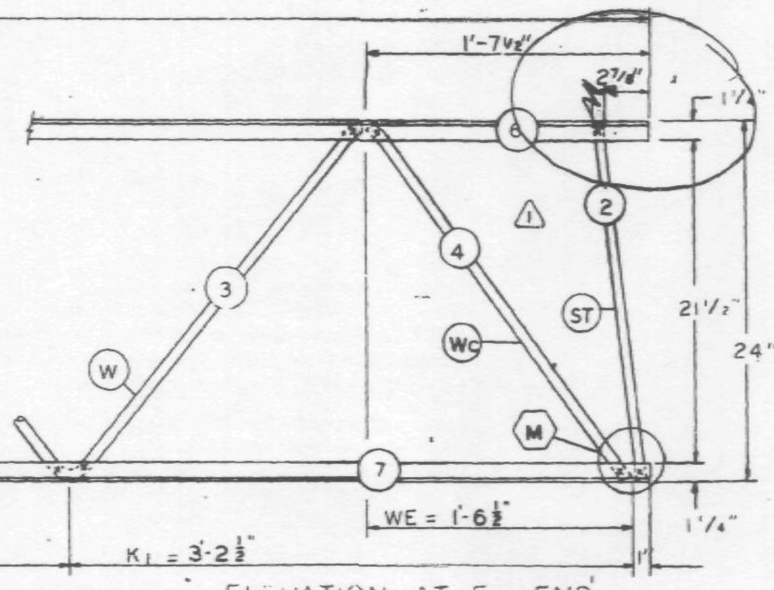

ELEVATION AT Es END

ALL PANEL POINTS RESISTANCE WELDED (x). ARC WELDS INDICATED AT SHADED AREAS AND AT BOTTOM CHORD WEB SPLICES (▬). ALL WELD DETAILS SHOWN ON SHEETS ST290 AND ST291.

⚠1 LETTERS IN HEXAGON INDICATE WELD DETAIL, ie. (A). LETTERS AND NUMBERS IN SQUARES INDICATE RESISTANCE WELD STRENGTH IDENTIFIED IN THE QUALITY CONTROL PROGRAM, ie., [R29].

REF. DRWG.

7-AB2-1	2-15-68
7-AB2-8	2-15-68
7-AB4-15.1	10-27-67
7-AB4-16 18 & 19	1-3-68
7-AB4-28 38 & 41	1-3-68

PAINT
LACLEDE ELECTROCOAT
RED NO. 10001

TRUSS DESIGNATION	TOP CHORD TWO ANGLES				BOTTOM CHORD TWO ANGLES				MAIN WEB "W"					VERTICAL "EST" STRUT				
	MK	TYPE STEEL	CHORD SIZE	LENGTH	MK	TYPE STEEL	CHORD SIZE	LENGTH	MK	TYPE STEEL	DIA	LENGTH	NO OF K	MK	TYPE STEEL	DIA	LENGTH	NUMBER REQUIRED
24T13-133	6	A242	1½"x1¼ x 230	13'-3"	7	A242	1½"x1¼ x 230	13'-3"	3	A242	.75	15'-4½"	3K@ 3'-4" = 10'-0"	12	A242	75	1'-10⅛"	1

Es END	TRUSS DESIGNATION	WE	INCLINED "ST" STRUT				WEB "Wc"				
			MK	TYPE STEEL	DIA	LENGTH	MK.	TYPE STEEL	PCS.	DIA.	LENGTH
	24T13-133	1'-6½"	2	A242	75	1'-11¾"	4	A242	1	.75	2'-5½"

EL END	TRUSS DESIGNATION	BEARING ANGLES				WEv	DIAGONAL "T" STRUT				INCLINED "ST" STRUT				END STIFFENER MK V5			END STIFFENER MK V6			WEB "Wc"				
		MK	TYPE STEEL	CHORD SIZE	LENGTH		MK	TYPE STEEL	DIA	LENGTH	MK	TYPE STEEL	DIA	LENGTH	TYPE STEEL	DIA	LENGTH	TYPE STEEL	DIA	LENGTH	MK.	TYPE STEEL	PCS.	DIA.	LENGTH
	24T13-133	–	—	—	—	1'-6½	–	—	–	—	2	A242	.75	1'-11½"	—	–	—	—	—	—	4	A242	1	.75	2'-5½"

NO.	DATE	REVISION	BY
⚠1	3-19-68	WEB	J.R.P.

SKILLING HELLE CHRISTIANSEN ROBERTSON ... Engineers
4/24/68 SK

BRIDGING TRUSS DETAILS
FOR
WORLD TRADE CENTER - N.Y.C
FOR
THE PORT OF NEW YORK AUTHORITY

BRIDGING TRUSS 24T13 x 13'-3" LONG
WORLD TRADE CENTER TOWERS A-B

FABRICATION BY LACLEDE STEEL COMPANY

FABRICATED AT MADISON, ILLINOIS		DESIGN DRAWING NO 7-AB2-8	PLATE
APPROVED FOR FABRICATION BY FOR PONYA	DATE	DRAWN BY J.R. DATE FEB 24, 1968	
APPROVED FOR FABRICATION BY FOR FABRICATOR	DATE	CHECKED BY J.R. PAUL DATE FEB 24, 1968	IN CHARGE OF PROD DEV
DETAILED BY A.C. WEBER		FABRICATION CONT NO W.T.C 221	SHEET NO BT 213

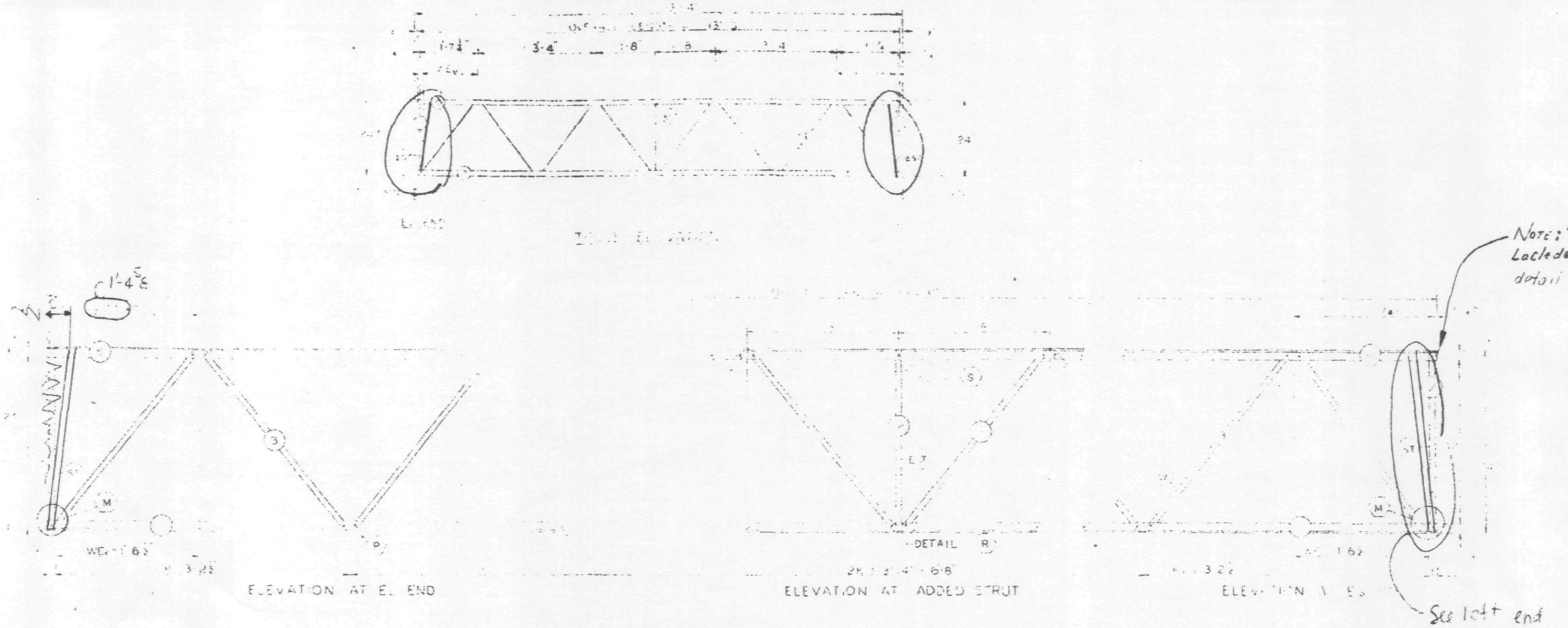

ALL PANEL POINTS RESISTANCE WELDED (x). ARC WELDS INDICATED AT SHADED AREAS AND AT BOTTOM CHORD WEB SPLICES. ALL WELD DETAILS SHOWN ON SHEETS ST290 AND ST291.
BOXED IN LETTERS INDICATE WELD DETAILS, ie. (A).

Truss designation	MK	Type steel	Chord size	Length	MK	Type steel	Chord size	Length	MK	Type steel	Dia	Length	No. of K	MK	Type steel	Dia	Length	Number required
24T13-133	[illegible]	A242	[illegible]	13'-3"	[illegible]	[illegible]	[illegible]	13'-3"	3	A242	.75	20-3⅝"	[illegible]	12	A242	.75	[illegible]	1

INCLINED

Es End Truss designation		MK	Type steel	Dia	Length
24T13-133	[illegible]	[illegible]	A242	.75	[illegible]

INCLINED

El End Truss designation	MK	Type steel	Chord size	Length	Elev	MK	Type steel	Dia	Length	MK	Type steel	Dia	Length	Type steel	MK V5 Dia	Length	Type steel	MK V6 Dia	Length
24T13-133	—	—	—	—	1'-6½"	—	—	—	—	2	A242	.75	1'-11¾"	—	—	—	—	—	—

7 A84-15,1 — 0-20-6
7 A84-16,18 & 19 — 1-3-6H
7 A84-28,38 & 41 — 1-3-68

SKILLING - HELLE CHRISTIANSEN - ROBERTSON
Structural & Civil Engineers
3/20/68 SK

BRIDGING TRUSS DETAILS
WORLD TRADE CENTER - N.Y.C.
FOR
THE PORT OF NEW YORK AUTHORITY

BRIDGING TRUSS 24T13, 13'-3" LONG
WORLD TRADE CENTER TOWERS A-B

LACLEDE STEEL COMPANY
MADISON, ILLINOIS
A82-8 PLATE
DRAWN BY Luck
DATE FEB 24, 1968
DATE FEB 24, 1968
LACLEDE STEEL CO.
221
SHEET NO. BT213

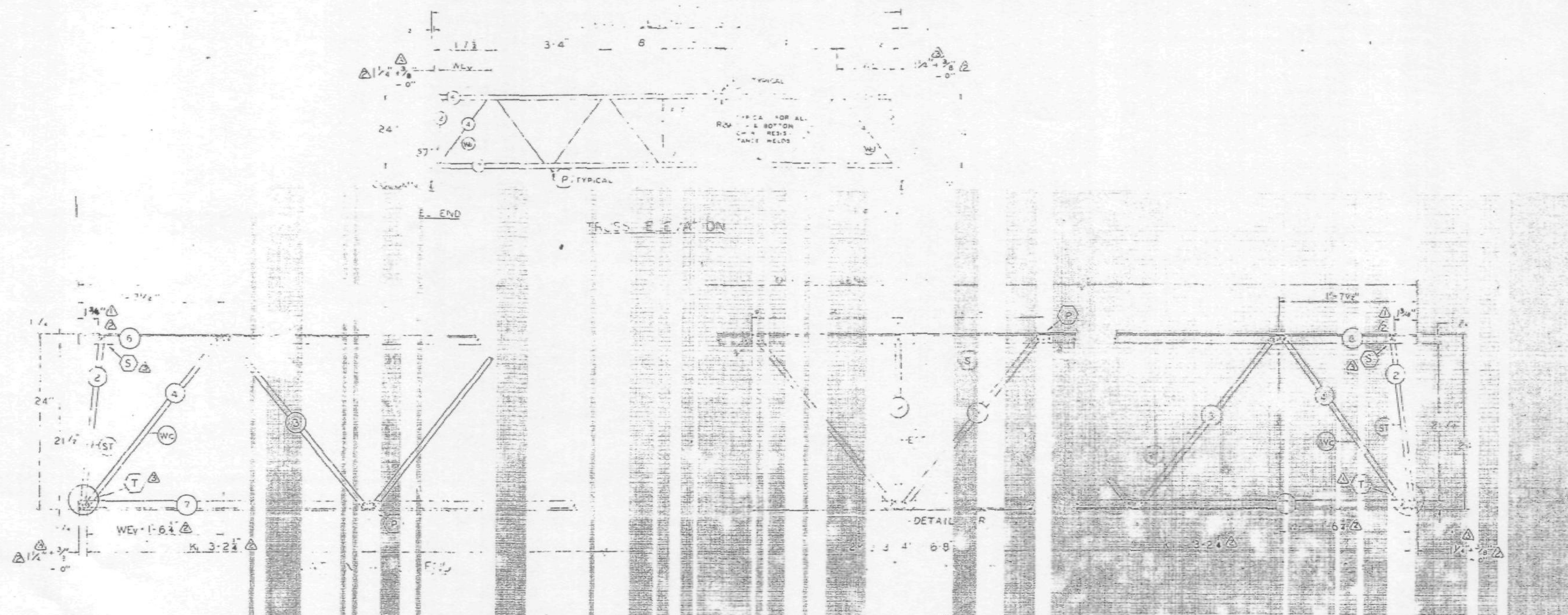

ALL PANEL POINTS RESISTANCE WELDED [illegible]
ARC WELDS INDICATED AT SHADED AREAS
AND AT BOTTOM CHORD WEB SPLICES [illegible]
ALL WELD DETAILS SHOWN ON SHEETS ST290
AND ST291.
LETTERS IN HEXAGON INDICATE WELD DETAIL [illegible] (A).
LETTERS AND NUMBERS IN SQUARES INDICATE RE-
SISTANCE WELD STRENGTH IDENTIFIED IN THE
QUALITY CONTROL PROGRAM [illegible] R29.

TRUSS DESIGNATION	TOP CHORD TWO ANGLES				BOTTOM CHORD TWO ANGLES				MAIN WEB "W"								VERTICAL STRUT	
	MK	TYPE STEEL	[illegible] SIZE	LENGTH	[illegible]	TYPE STEEL	[illegible] SIZE	LENGTH	MK	TYPE STEEL	DIA	LENGTH	[illegible]	[illegible]	[illegible]	[illegible]	[illegible]	NUMBER REQUIRED
24T13A-133	6	A242	1½ x 1¼ x .230	13'-3"	[illegible]	A242	[illegible] x .230	13'-3"	3	A242	.75	15'-4½"	3K x 3[illegible]	10'-3"	[illegible]	[illegible]	[illegible]	[illegible]

Es END TRUSS DESIGNATION	[illegible]	INCLINED ST STRUT				WEB "WC"				
		MK	TYPE STEEL	DIA	LENGTH	MK	TYPE STEEL	PCS	DIA	LENGTH
24T13A-133	1'-6¼"	2	A242	.75	[illegible]	4	A242	[illegible]	.75	2'-5½"

EL END TRUSS DESIGNATION	BEARING ANGLES				WEv	DIAGONAL [illegible] STRUT				INCLINED [illegible] STRUT				END STIFFENER						WEB WCv				
	MK	TYPE STEEL	[illegible] SIZE	LENGTH		MK	TYPE STEEL	DIA	LENGTH	MK	TYPE STEEL	DIA	LENGTH	[illegible]	[illegible]	DIA	LENGTH	[illegible]	[illegible]	MK	TYPE STEEL	PCS	DIA	LENGTH
24T13A-133	—	—	—	—	1'-6¼"	—	—	—	—	2	A242	.75	1'-11[illegible]	—	—	—	—	—	—	4	A242	1	.75	2'-5½"

NO.	DATE	REVISION	BY
3	8-29-68	AS NOTED	T.M.C.
2	8-28-68	AS NOTED	T.M.C.
1	4-25-68	END STRUT DIMENSIONS	T.M.C.

James W. [illegible] 9/4/68

221 BT2[illegible]A

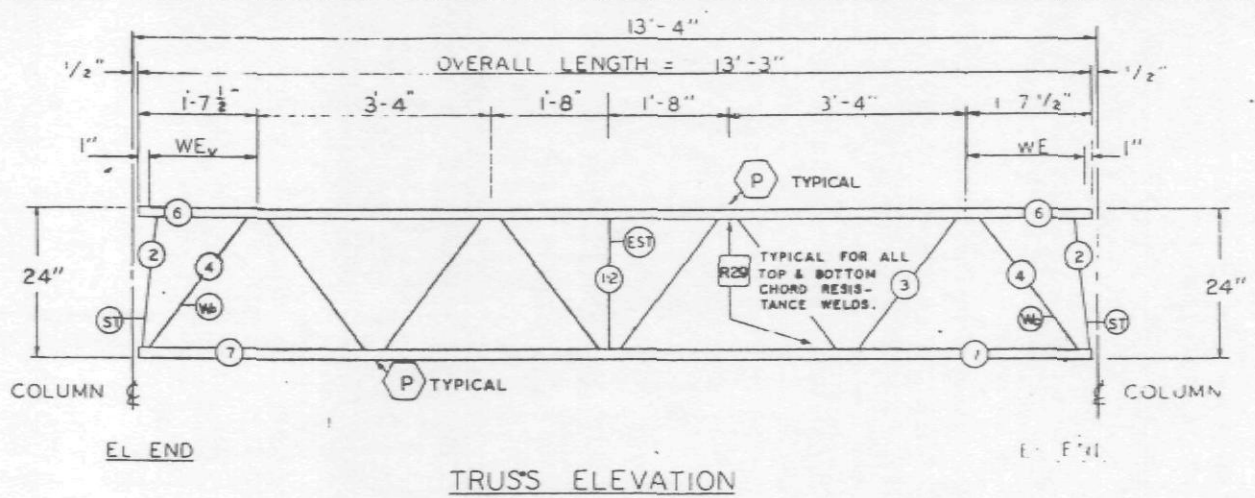

TRUSS ELEVATION

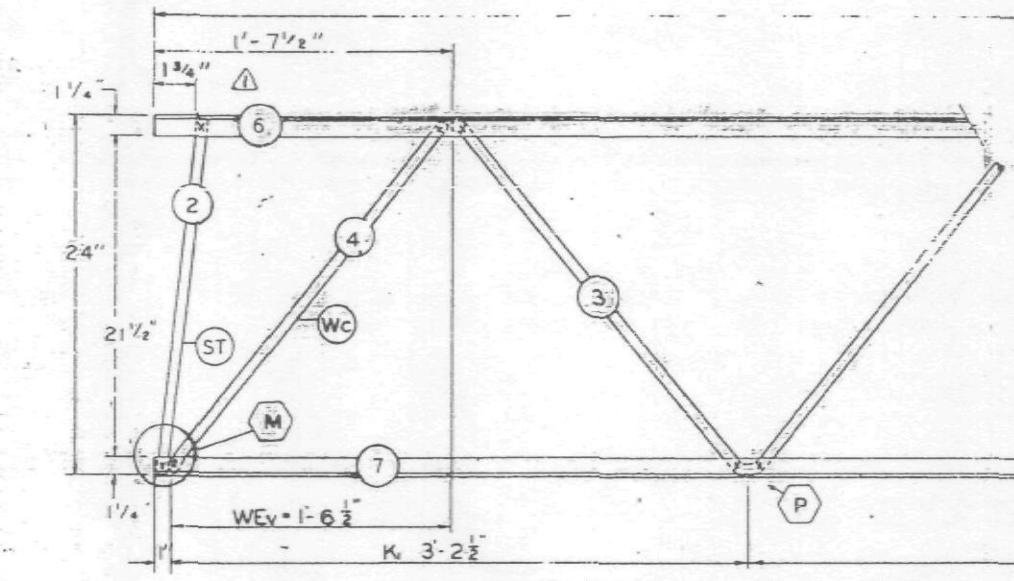

ELEVATION AT EL END

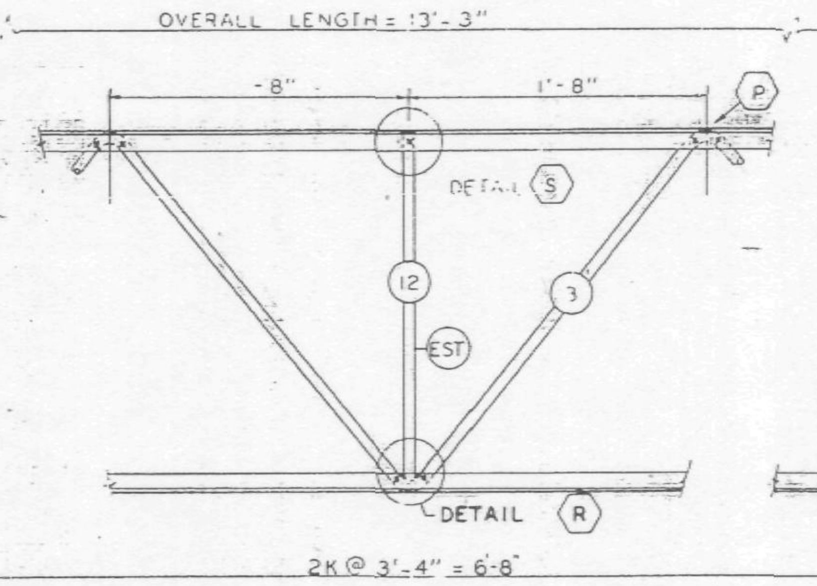

ELEVATION AT ADDED STRUT

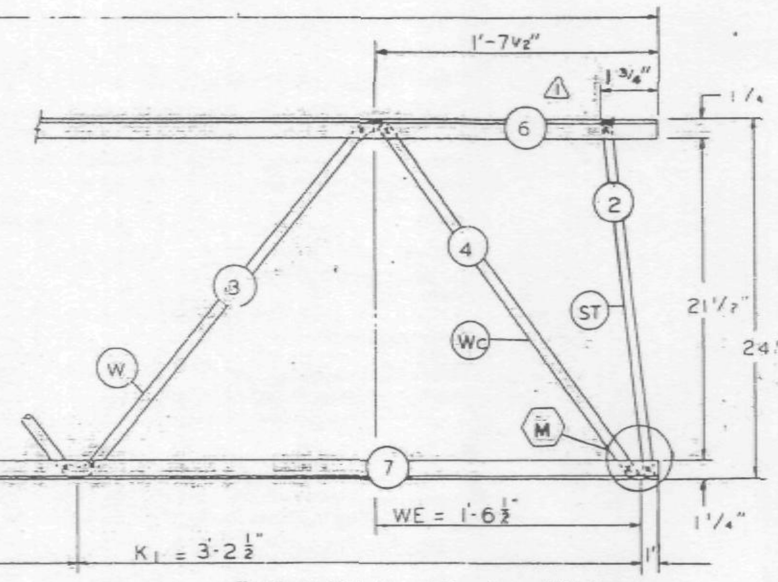

ELEVATION AT EL END

FABRICATION REQUIRMENTS	DESIGN	TOLERANCE
CAMBER AT MIDSPAN	0"	± 3/8"
DESIGN DEPTH	24"	± 1/4"
PANEL "K"	3'-4"	± 1/4"
PANEL "K1"	3'-2 1/2"	± 1/4"
WEB DEPTH	23 7/8"	± 1/4"
OVERALL LENGTH	13'-3"	± 3/8"

ALL PANEL POINTS RESISTANCE WELDED (X). ARC WELDS INDICATED AT SHADED AREAS AND AT BOTTOM CHORD WEB SPLICES. ALL WELD DETAILS SHOWN ON SHEETS ST290 AND ST291.

LETTERS IN HEXAGON INDICATE WELD DETAIL, i.e. (A). LETTERS AND NUMBERS IN SQUARES INDICATE RESISTANCE WELD STRENGTH IDENTIFIED IN THE QUALITY CONTROL PROGRAM, i.e., [R29].

REF. DRWG.

7-AB2-1	2-15-68
7-AB2-8	2-15-68
7-AB4-15.1	10-27-67
7-AB4-16 18 & 19	1-3-68
7-AB4-28 38 & 41	1-3-68

PAINT
LACLEDE ELECTROCOAT
RED NO. 10001

TRUSS DESIGNATION	TOP CHORD TWO ANGLES				BOTTOM CHORD TWO ANGLES				MAIN WEB "W"					VERTICAL "EST" STRUT				
	MK	TYPE STEEL	CHORD SIZE	LENGTH	MK	TYPE STEEL	CHORD SIZE	LENGTH	MK	TYPE STEEL	DIA	LENGTH	NO OF K	MK	TYPE STEEL	DIA	LENGTH	NUMBER REQUIRED
24T13A -133	6	A242	1 1/2" x 1 1/4" x 230	13'-3"	7	A242	1 1/2" x 1 1/4" x 230	13'-3"	3	A242	.75	15'-4 1/2"	3K @ 3'-4" = 10'-0"	12	A242	75	1'-10 1/8"	1

Es END	TRUSS DESIGNATION	WE	INCLINED "ST" STRUT				WEB "Wc"				
			MK	TYPE STEEL	DIA	LENGTH	MK.	TYPE STEEL	PCS.	DIA.	LENGTH
	24T13A -133	1'-6 1/2"	2	A242	75	1'-11 3/4"	4	A242	1	.75	2'-5 1/2"

EL END	TRUSS DESIGNATION	BEARING ANGLES				WEv	DIAGONAL "T" STRUT				INCLINED "ST" STRUT				END STIFFENER MK VS			END STIFFENER MK V6			WEB "Wc"				
		MK	TYPE STEEL	CHORD SIZE	LENGTH		MK.	TYPE STEEL	DIA	LENGTH	MK	TYPE STEEL	DIA	LENGTH	TYPE STEEL	DIA	LENGTH	TYPE STEEL	DIA	LENGTH	MK.	TYPE STEEL	PCS.	DIA.	LENGTH
	24T13A -133	—	—	—	—	1'-6 1/2"	—	—	—	—	2	A242	.75	1'-11 3/4"	—	—	—	—	—	—	4	A242	1	.75	2'-5 1/2"

NO.	DATE	REVISIONS	BY
⚠1	4-25-68	END STRUT DIMENSIONS	T.M.C.

BRIDGING TRUSS DETAILS
FOR
WORLD TRADE CENTER - N.Y.C
FOR
THE PORT OF NEW YORK AUTHORITY

BRIDGING TRUSS 24T13A x 13'-3" LONG
WORLD TRADE CENTER TOWERS A-B

FABRICATION BY LACLEDE STEEL COMPANY

FABRICATED AT MADISON, ILLINOIS		DESIGN DRAWING NO 7-AB2-8	PLATE
APPROVED FOR FABRICATION BY James White FOR PONYA	DATE 5/1/68	DRAWN BY [signature] DATE FEB 24 1968	
APPROVED FOR FABRICATION BY FOR FABRICATOR	DATE	CHECKED BY J.B. PAUL DATE FEB 24 1968	IN CHARGE OF PROD. DEV
LACLEDE STEEL CO. DETAILED BY A.C. WEBER		FABRICATION CONT NO W.T.C. 221	SHEET NO BT213A

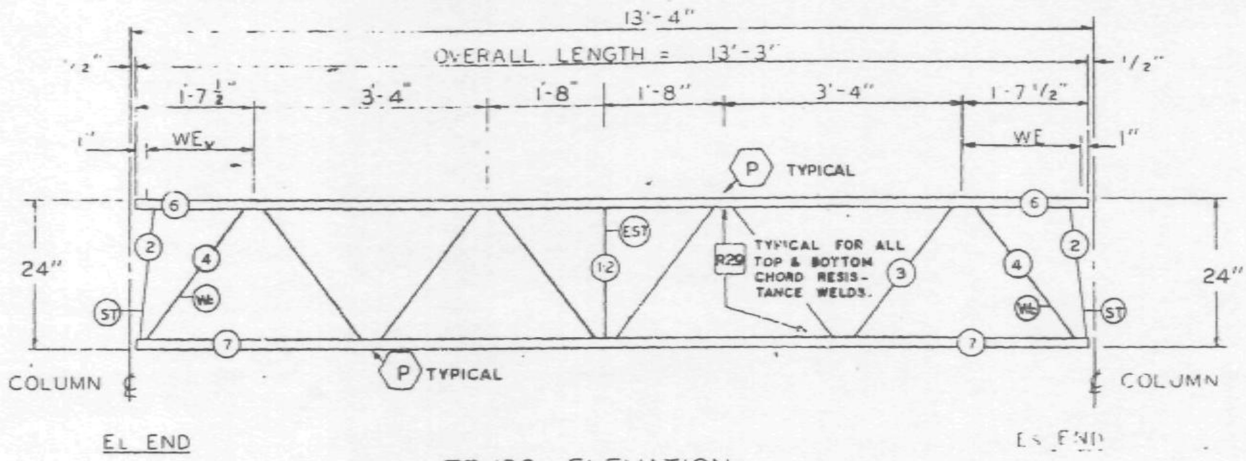

TRUSS ELEVATION

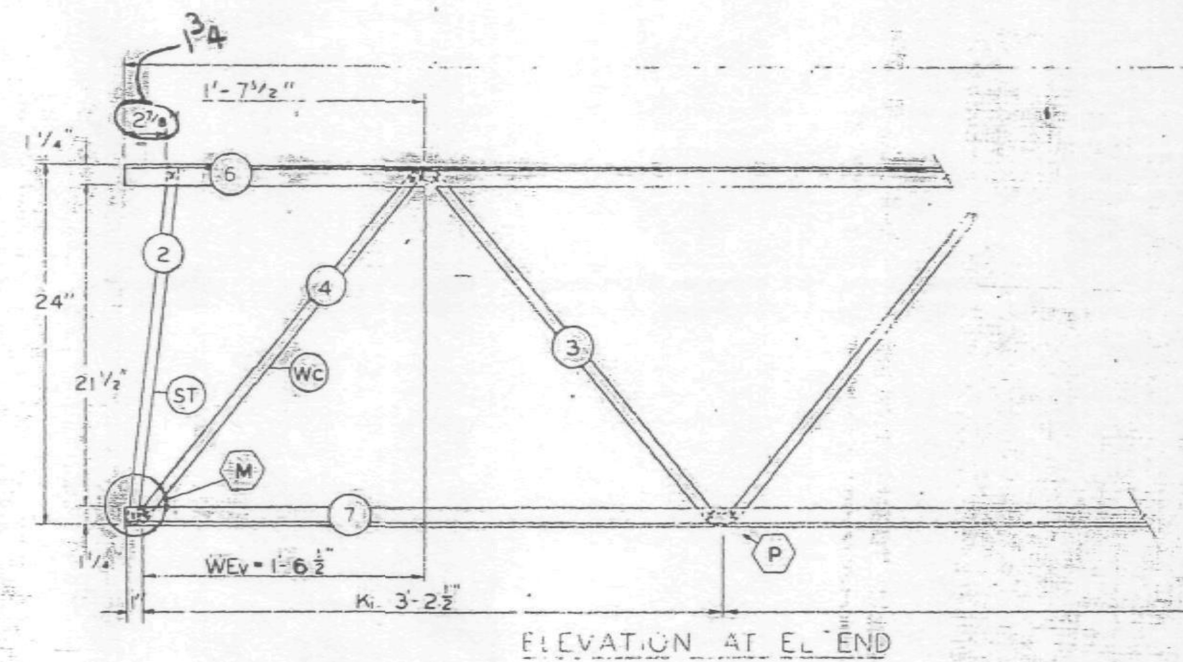

ELEVATION AT EL END

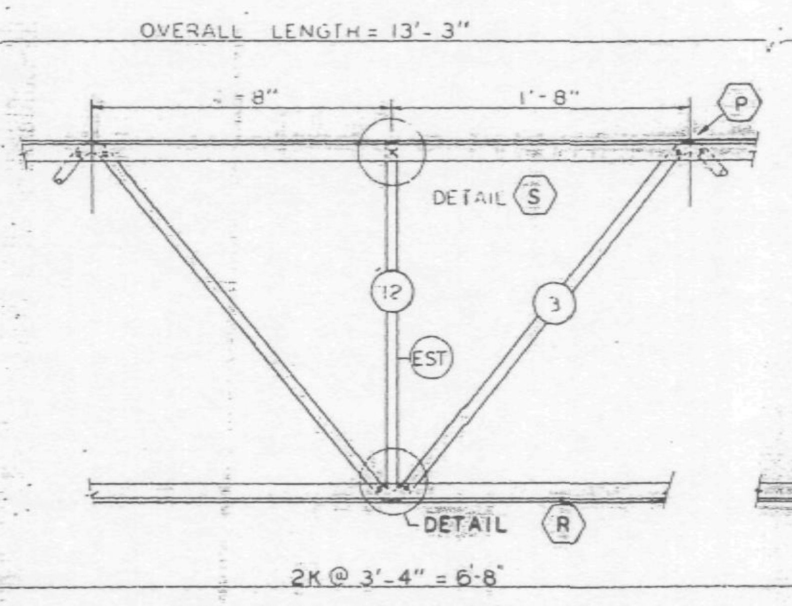

ELEVATION AT ADDED STRUT

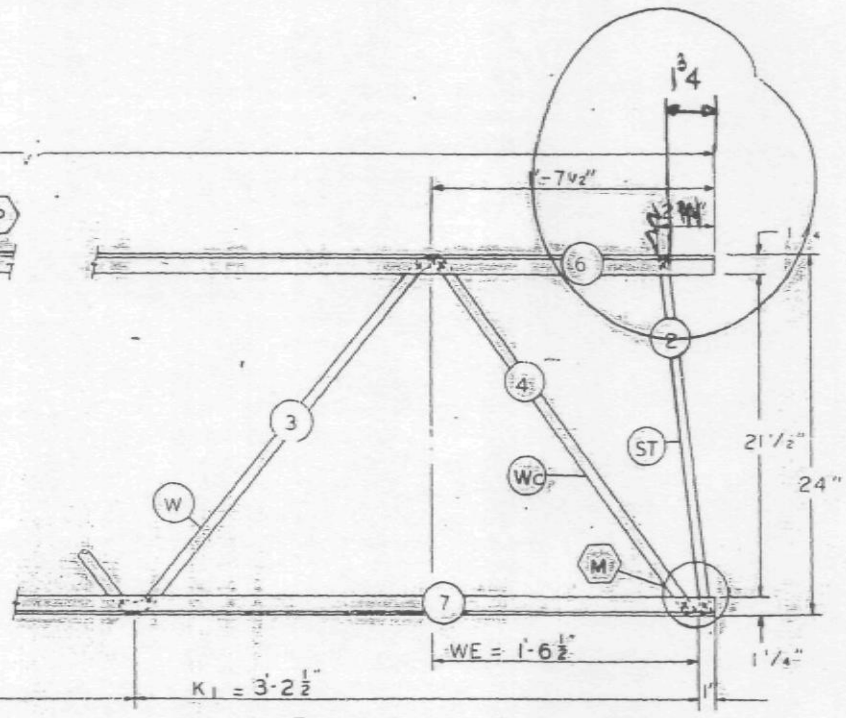

ELEVATION AT Es END

FABRICATION REQUIRMENTS	DESIGN	TOLERANCE
CAMBER AT MIDSPAN	0"	± 3/8"
DESIGN DEPTH	24"	± 1/4"
PANEL "K"	3'-4"	± 1/4"
PANEL "K1"	3'-2½"	± 1/4"
WEB DEPTH	23 7/8"	± 1/4"
OVERALL LENGTH	13'-3"	± 3/8"

ALL PANEL POINTS RESISTANCE WELDED (X). ARC WELDS INDICATED AT SHADED AREAS AND AT BOTTOM CHORD WEB SPLICES (▬). ALL WELD DETAILS SHOWN ON SHEETS ST290 AND ST291.
LETTERS IN HEXAGON INDICATE WELD DETAIL, i.e. A. LETTERS AND NUMBERS IN SQUARES INDICATE RESISTANCE WELD STRENGTH IDENTIFIED IN THE QUALITY CONTROL PROGRAM, i.e. R29.

TRUSS DESIGNATION	TOP CHORD TWO ANGLES				BOTTOM CHORD TWO ANGLES				MAIN WEB "W"					VERTICAL "EST" STRUT				
	MK	TYPE STEEL	CHORD SIZE	LENGTH	MK	TYPE STEEL	CHORD SIZE	LENGTH	MK	TYPE STEEL	DIA	LENGTH	NO OF K	MK	TYPE STEEL	DIA	LENGTH	NUMBER REQUIRED
24T13A -133	6	A242	1½" x 1¼ x 230	13'-3"	7	A242	1½" x 1¼ x 230	13'-3"	3	A242	.75	15'-4½"	3K @ 3'-4" = 10'-0"	12	A242	75	1'-10⅛"	1

Es END	TRUSS DESIGNATION	WE	INCLINED ST STRUT				WEB "Wc"				
			MK	TYPE STEEL	DIA	LENGTH	MK.	TYPE STEEL	PCS.	DIA.	LENGTH
	24T13A -133	1'-6½"	2	A242	75	1'-11¾"	4	A242	1	.75	2'-5½"

EL END	TRUSS DESIGNATION	BEARING ANGLES				WEv	DIAGONAL "T" STRUT				INCLINED "ST" STRUT				END STIFFENER MK V5			END STIFFENER MK V6			WEB "Wc"				
		MK	TYPE STEEL	CHORD SIZE	LENGTH		MK.	TYPE STEEL	DIA	LENGTH	MK	TYPE STEEL	DIA	LENGTH	TYPE STEEL	DIA	LENGTH	TYPE STEEL	DIA	LENGTH	MK.	TYPE STEEL	PCS.	DIA.	LENGTH
	24T13A -133	–	–	—	—	1'-6½	–	—	–	—	2	A242	.75	1'-11¾"	–	–	—	—	–	—	4	A242	1	.75	2'-5½"

REF. DRWG.

7-AB2-1	2-15-68
7-AB2-8	2-15-68
7-AB4-15 1	10-27-67
7-AB4-16 18 & 19	1-3-68
7-AB4-28 38 & 41	1-3-68

PAINT
LACLEDE ELECTROCOAT
RED NO. 10001

BRIDGING TRUSS DETAILS
FOR
WORLD TRADE CENTER - N.Y.C.
FOR
THE PORT OF NEW YORK AUTHORITY

BRIDGING TRUSS 24T13A x 13'-3" LONG
WORLD TRADE CENTER TOWERS A-B

FABRICATION BY LACLEDE STEEL COMPANY

FABRICATED AT MADISON, ILLINOIS		DESIGN DRAWING NO 7-AB2-8	PLATE
APPROVED FOR FABRICATION BY FOR PONYA	DATE	DRAWN BY [illegible] DATE FEB 24 1968	
APPROVED FOR FABRICATION BY FOR FABRICATOR	DATE	CHECKED BY J.H.PAUL DATE FEB 24 1968	IN CHARGE OF PROD. DEV.
LACLEDE STEEL CO. DETAILED BY A.C. AYBER		FABRICATION CONT NO WTC 221	SHEET NO BT213A

FABRICATI[illegible]
CAMBER AT MIDSPA[illegible]
DESIGN DEPTH
PANEL PT.
[illegible]
WEB DEPTH
OVERALL LENGTH

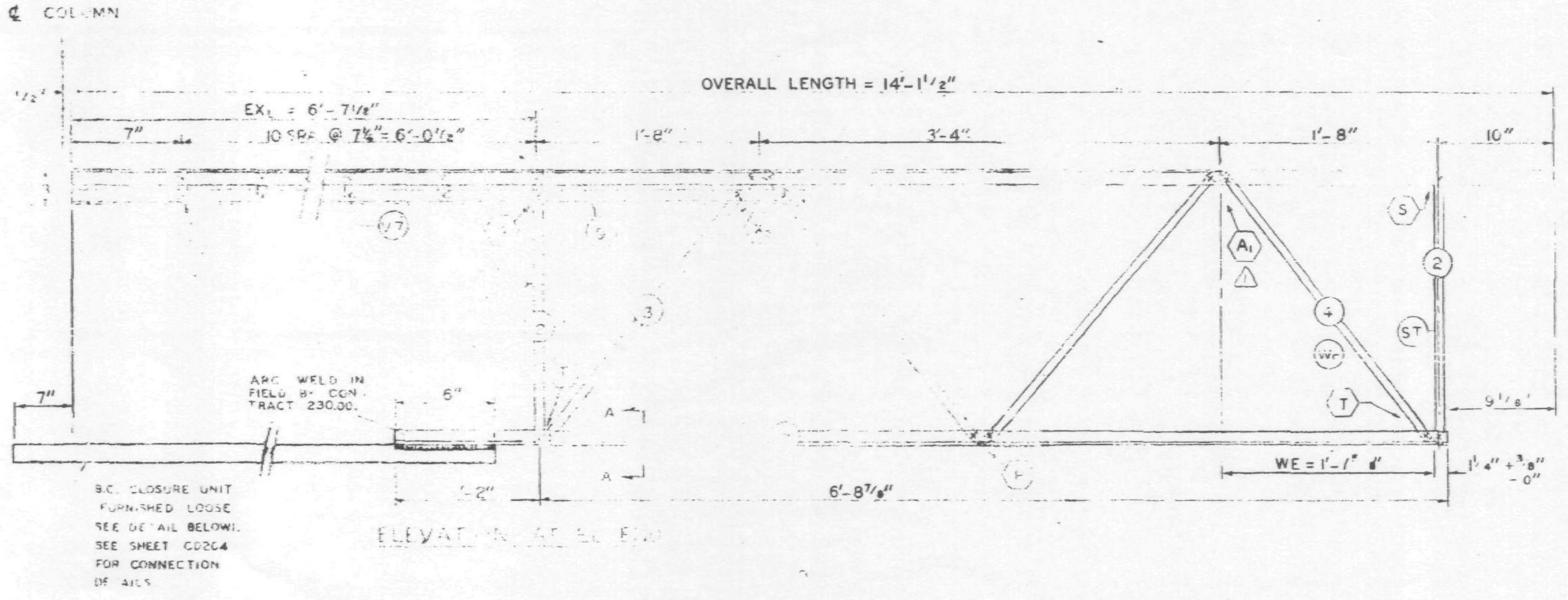

ALL [illegible]
ALL [illegible] INDICATE[illegible]
AND AT BOTTOM [illegible]
ALL WELD DETAILS [illegible]
ST291 AND ST292.

SEE SHEET CD204 [illegible]
DETAIL.
LETTERS IN HEXAGO[illegible]
LETTERS AND NUMB[illegible]
SISTANCE WELD SE[illegible]
QUALITY CONTROL [illegible]

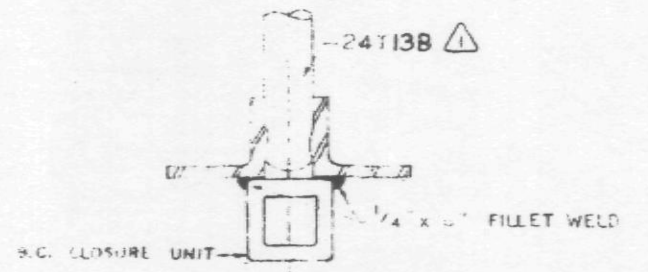

SECTION A-A

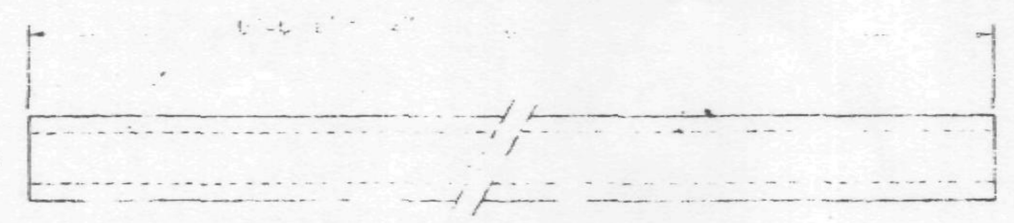

ELEVATION

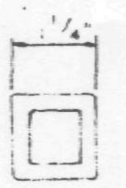

END VIEW

B.C. CLOSURE UNIT

MATERIAL LIST FOR B.C. CLOSURE UNIT			
PCS.	TYPE STEEL	[illegible]	LENGTH
1	A242	1¼ x [illegible] WALL [illegible] TUBING	[illegible]

PAINT
LACLEDE ELECTROCOAT
RED NO 10001

TRUSS DESIGNATION	TOP CHORD TWO ANGLES				BOTTOM CHORD TWO ANGLES				MAIN WEB "W"					VERTICAL "ST" STRUT					TRUSS DATA	
	MK	TYPE STEEL	CHORD SIZE	LENGTH	MK	TYPE STEEL	CHORD SIZE	LENGTH	MK	TYPE STEEL	DIA	LENGTH	[illegible]	MK	TYPE STEEL	DIA	LENGTH	NUMBER REQUIRED		
24T13B-1415	9	A242	1½"x1¼"x 230"	14'-1½"	7	A242	1½"x1¼"x 230"	7'-10⅞"	3	A242	.75	7'-8¼"	1½K @3'-4" = 5'-0"	–	–	–	–	– –		

Es END	TRUSS DESIGNATION	WE	VERTICAL "ST" STRUT				WEB "Wc"				
			MK	TYPE STEEL		LENGTH	MK	TYPE STEEL	DIA.	PCS.	LENGTH
	24T13B-1415	1'-7⅝"	2	A242	.75	1'-11¾"	4	A242	.75	1	2'-5¾"

EL END	TRUSS DESIGNATION	BEARING ANGLES				EX_L	DIAGONAL "T" STRUT				VERTICAL "ST" STRUT				END STIFFENER MK V7			
		MK	TYPE STEEL	CHORD SIZE	LENGTH		MK	TYPE STEEL	DIA.	LENGTH	MK	TYPE STEEL	DIA	LENGTH	TYPE STEEL	DIA	LENGTH	NO. REQ'D
	24T13B-1415	9	A242	1½"x1¼"x.230	8'-8"	6'-7⅛"	–	—	–	—	2	A242	.75	1'-[illegible]"	A242	.75	2⅛"	10

NO.	DATE	REVISION	BY
1	2-25-69	AS NOTED	R.J.P.

BRIDGING TR[illegible]
"WORLD TRADE [illegible]
THE PORT OF NE[illegible]

BRIDGING TRUSS 24T13B x [illegible]
WORLD TRADE CENTER TOWERS

FABRICATION BY LACLEDE STEE[illegible]
FABRICATED AT MADISON, ILLINOIS
APPROVED FOR FABRICATION FOR P.O.N.Y.A. James White DATE [illegible]
APPROVED FOR FABRICATION BY FOR FABRICATOR DATE
LACLEDE STEEL CO.
DETAILED BY [illegible]

FABRICATION REQUIRMENTS		
	DESIGN	TOLERANCE
CAMBER AT MIDSPAN	0"	+ 1/8"
DESIGN DEPTH	24"	± 1/8"
PANEL "K"	3'-4"	± 1/4"
PANEL "K"	— —	— —
WEB DEPTH	23 1/8"	± 1/4"
OVERALL LENGTH	14'-1 1/2"	± 3/8"

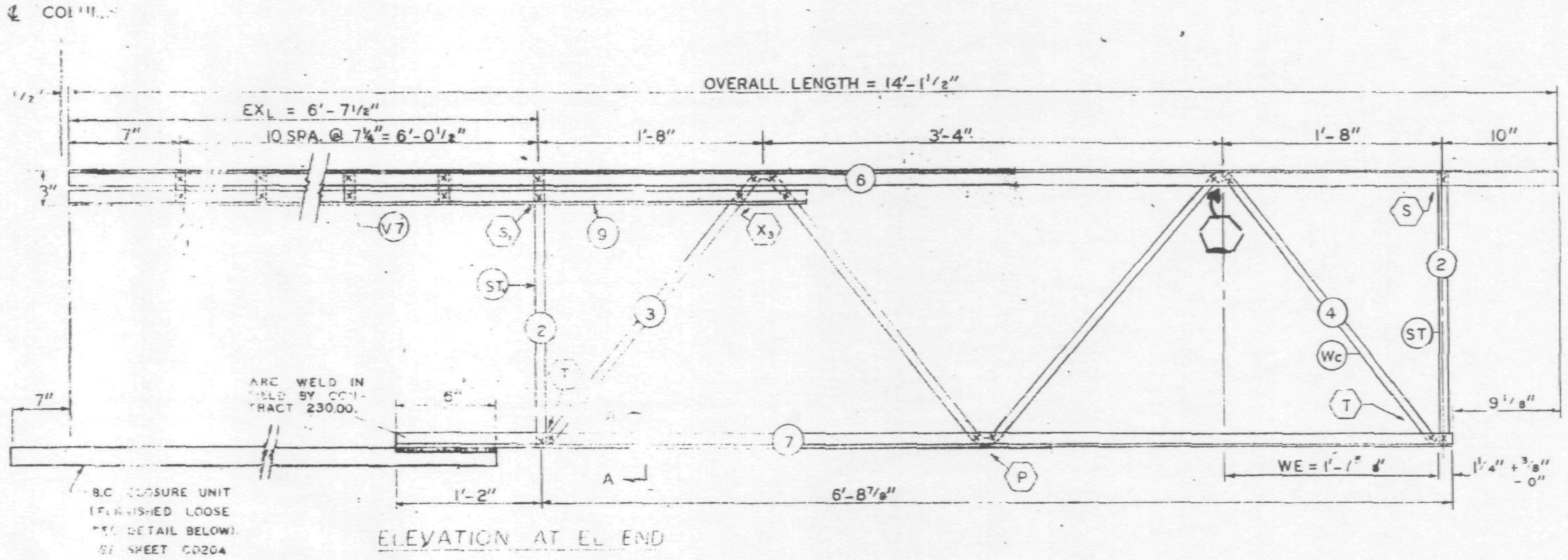

ELEVATION AT EL END

ALL PANEL POINTS RESISTANCE WELDED (X).
ALL WELDS INDICATED AT SHADED AREAS AND AT BOTTOM CHORD WEB SPLICES
ALL WELD DETAILS SHOWN ON SHEETS ST290, ST291, AND ST292.

SEE SHEET CD204 FOR B.C. CLOSURE UNIT DETAIL.
LETTERS IN HEXAGON INDICATE WELD DETAIL, ie. (A)
LETTERS AND NUMBERS IN SQUARES INDICATE RESISTANCE WELD STRENGTH IDENTIFIED IN THE QUALITY CONTROL PROGRAM, ie., R29.

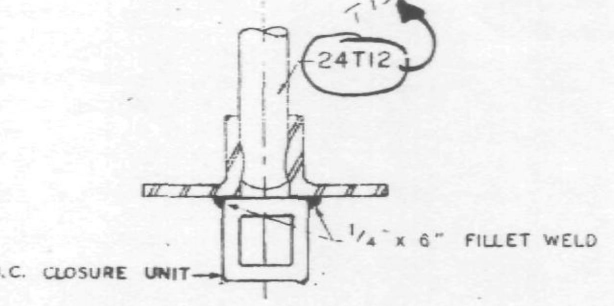

SECTION A-A

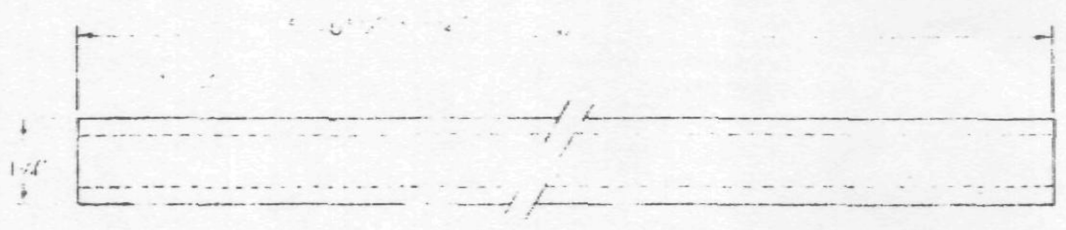

ELEVATION

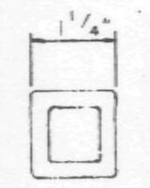

END VIEW

B.C. CLOSURE UNIT

SKILLING - HELLE
CHRISTIANSEN - ROBERTSON
Structural & Civil Engineers
☐ APPROVED
☒ APPROVED AS NOTED
☐ RESUBMIT
☐ REJECTED
2 | 10 | 69 | SK

REF. DWG.

7-AB2-1	1-6-6
7-AB2-8	7-22-6
7-AB4-15.1	10-4-6
7-AB4-16	7-22-6
7-AB4-10	12-20-6
7-AB4-38	10-15-6

MATERIAL LIST FOR B.C. CLOSURE UNIT			
PCS.	TYPE STEEL	SIZE	LENGTH
1	A242	1 1/4 x .187 WALL	6' 6 1/2"
		SQ TUBING	

PAINT
LACLEDE ELECTROCOAT
RED NO 10001

TRUSS DESIGNATION	TOP CHORD TWO ANGLES				BOTTOM CHORD TWO ANGLES				MAIN WEB "W"					VERTICAL "EST" STRUT					TRUSS DATA	
	MK	TYPE STEEL	CHORD SIZE	LENGTH	MK.	TYPE STEEL	CHORD SIZE	LENGTH	MK	TYPE STEEL	DIA.	LENGTH	NO. OF K.	MK.	TYPE STEEL	DIA	LENGTH	NUMBER REQUIRED		
24T13B - 1415	6	A242	1 1/2" x 1 1/4" x .230"	14'-1 1/2"	7	A242	1 1/2" x 1 1/4" x .230"	7'-10 7/8"	3	A242	.75	7'-8 1/4"	1 1/2 K @ 3'-4" = 5'-0"	—	—	—	—	—		

ES END	TRUSS DESIGNATION	WE	VERTICAL "ST" STRUT				WEB "Wc"				
			MK	TYPE STEEL	DIA	LENGTH	MK.	TYPE STEEL	DIA.	PCS.	LENGTH
	24T13B - 1415	1'-7 5/8"	2	A242	.75	1'-11 3/4"	4	A242	.75	1	2'-5 3/4"

EL END	TRUSS DESIGNATION	BEARING ANGLES				EX_L	DIAGONAL "T" STRUT				VERTICAL "ST" STRUT				END STIFFENER MK V7			
		MK.	TYPE STEEL	CHORD SIZE	LENGTH		MK.	TYPE STEEL	DIA.	LENGTH	MK.	TYPE STEEL	DIA.	LENGTH	TYPE STEEL	DIA.	LENGTH	NO. REQ'D
	24T13B - 1415	9	A242	1 1/2 x 1 1/4 x .230	8'-8"	8'-7 1/2"	—	—	—	—	2	A242	.75	1'-11 3/4"	A242	.75	2 7/8"	10

NO.	DATE	REVISION	BY

BRIDGING TRUSS DETAILS
FOR
WORLD TRADE CENTER - N.Y.C.
FOR
THE PORT OF NEW YORK AUTHORITY

BRIDGING TRUSS 24T13B x 14'-1 1/2" LONG
WORLD TRADE CENTER TOWERS A-B

FABRICATION BY: LACLEDE STEEL COMPANY
FABRICATED AT MADISON, ILLINOIS
APPROVED FOR FABRICATION BY ___ FOR P.O.N.Y.A. DATE
APPROVED FOR FABRICATION BY ___ FOR FABRICATOR DATE
DETAILED BY A C WEBER
DESIGN DRAWING NO. 7-AB218 PLATE
DRAWN BY DATE JAN. 28, 1969
CHECKED BY T.M.CHURA DATE JAN. 28, 1969
FABRICATION CONT. NO. W.T.C. 221
SHEET BT 213

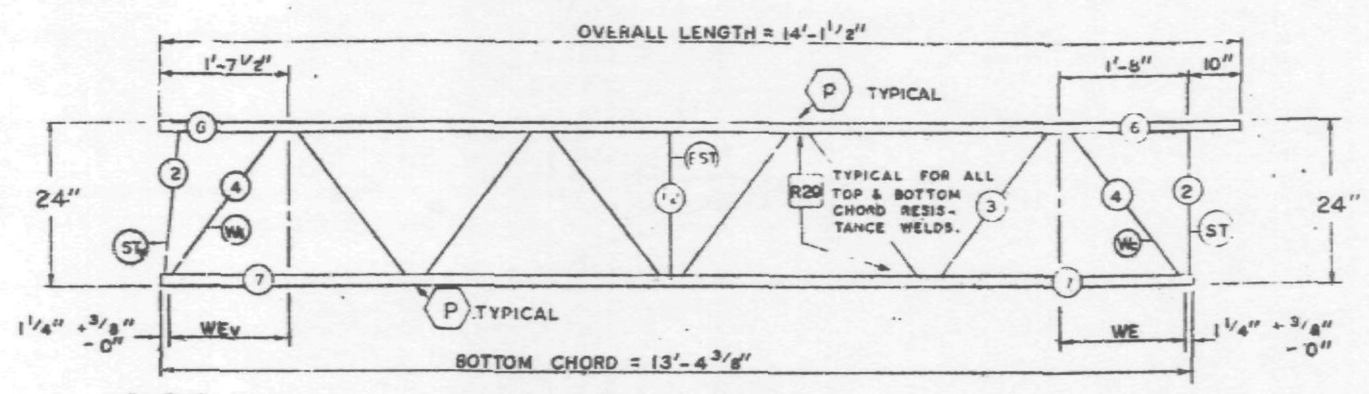

TRUSS ELEVATION

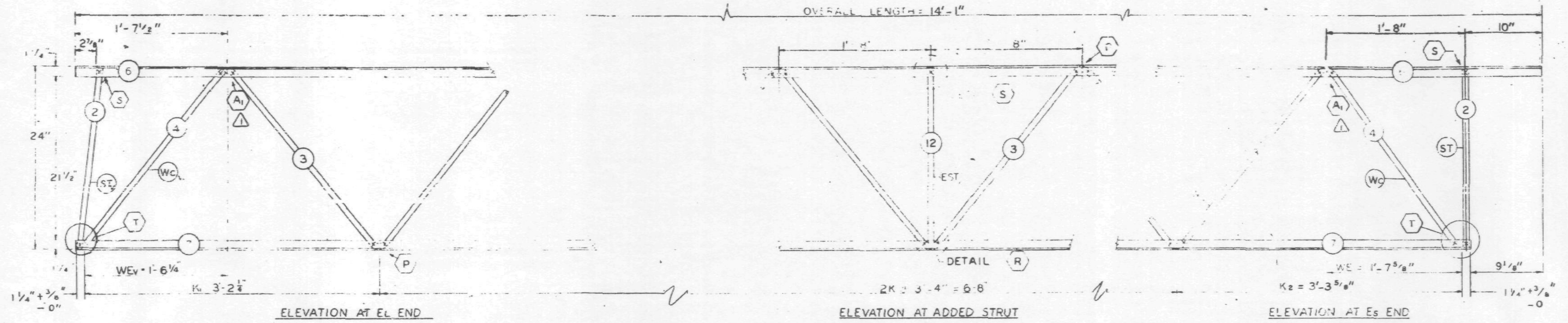

ELEVATION AT EL END

ELEVATION AT ADDED STRUT

ELEVATION AT ES END

FABRICATION REQUIRMENT	DESIGN	TOLERANCE
CAMBER AT MIDSPAN	0"	± 3/8"
DESIGN DEPTH	24"	± 1/4"
PANEL "K"	3'-4"	± 1/4"
PANEL "K1"	3'-2 1/2"	± 1/4"
PANEL "K2"	3'-3 5/8"	± 1/4"
OVERALL LENGTH	14'-1 1/2"	± 3/8"
WEB DEPTH	23 7/8"	± 1/4"

ALL PANEL POINTS RESISTANCE WELDED EXC. ARC WELDS INDICATED AT SHADED AREAS AND AT BOTTOM CHORD WEB SPLICES. ALL WELD DETAILS SHOWN ON SHEETS ST290 AND ST291.

LETTERS IN HEXAGON INDICATE WELD DETAIL, i.e. A. LETTERS AND NUMBERS IN SQUARES INDICATE RESISTANCE WELD STRENGTH IDENTIFIED IN THE QUALITY CONTROL PROGRAM, i.e. R29.

TRUSS DESIGNATION	TOP CHORD TWO ANGLES				BOTTOM CHORD TWO ANGLES				MAIN WEB "W"					VERTICAL "EST" STRUT				NUMBER REQUIRED
	MK	TYPE STEEL	CHORD SIZE	LENGTH	MK	TYPE STEEL	CHORD SIZE	LENGTH	MK	TYPE STEEL	DIA	LENGTH	NO. OF K	MK	TYPE STEEL	DIA	LENGTH	
24T13C-1415	6	A242	1 1/2 x 1 1/4 x 230	14'-1 1/2"	7	A242	1 1/2 x 1 1/4 x 230	13'-4 3/8"	3	A242	.75	15'-4 1/2"	3K @ 3'-4" = 10'-0"	12	A242	.75	1'-10 7/8"	1

ES END	TRUSS DESIGNATION	WE	VERTICAL "ST" STRUT				WEB "Wc"				
			MK	TYPE STEEL	DIA	LENGTH	MK.	TYPE STEEL	PCS.	DIA.	LENGTH
	24T13C-1415	1'-7 5/8"	2	A242	.75	1'-11 3/4"	4	A242	1	.75	2'-5 3/4"

EL END	TRUSS DESIGNATION	BEARING ANGLES				WEV	DIAGONAL "T" STRUT				INCLINED "STV" STRUT				END STIFFENER						WEB "WcV"				
		MK	TYPE STEEL	CHORD SIZE	LENGTH		MK.	TYPE STEEL	DIA	LENGTH	MK	TYPE STEEL	DIA	LENGTH	MK V5 TYPE STEEL	DIA	LENGTH	MK V6 TYPE STEEL	DIA	LENGTH	MK.	TYPE STEEL	PCS.	DIA.	LENGTH
	24T13C-1415	–	–	–	–	1'-6 1/4"	–	–	–	–	2	A242	.75	1'-11 1/2"	–	–	–	–	–	–	4	A242	1	.75	2'-5 1/2"

REF. DRWG.

7-AB2-1	-6-68
7-AB2-8	7-22-68
7-AB4-15.1	10-4-68
7-AB4-16	7-22-68
7-AB4-28 & 41	7-22-68
7-AB4-38	10-15-68

PAINT
LACLEDE ELECTROCOAT
RED NO 10001

BRIDGING TRUSS DETAILS
FOR
WORLD TRADE CENTER - N.Y.
FOR
THE PORT OF NEW YORK AUTHORITY

BRIDGING TRUSS 24T13C x 14'-1 1/2" LONG
WORLD TRADE CENTER TOWERS A-B

LACLEDE STEEL COMPANY
AT MADISON, ILLINOIS
DESIGN DRAWING NO 7-AB2-8
DRAWN BY — DATE JAN. 24, 1968
CHECKED BY — DATE JAN. 24, 1968
FABRICATION CONT. NO W.T.C. 221
SHEET NO ST213C
LACLEDE STEEL CO.

NO.	DATE	REVISION	BY
1	2-25-69	WELD DETAIL A1	R.L.P.

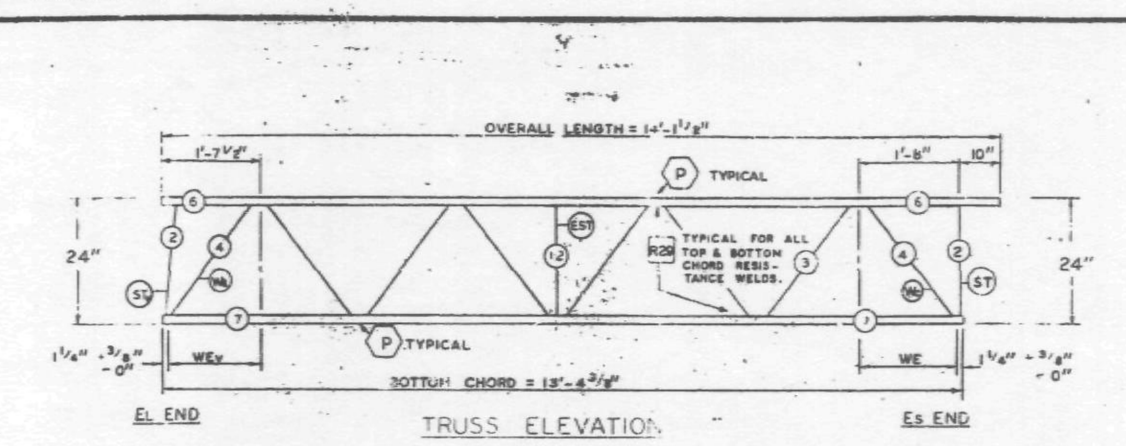

TRUSS ELEVATION

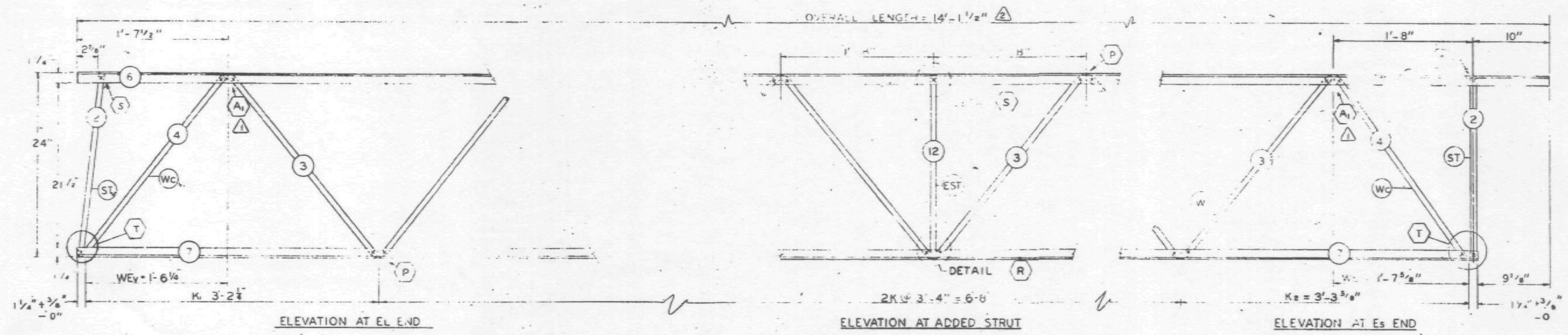

ELEVATION AT EL END

ELEVATION AT ADDED STRUT

ELEVATION AT Es END

FABRICATION REQUIREMENTS	DESIGN	TOLERANCE
CAMBER AT MIDSPAN	0"	± 3/8"
DESIGN DEPTH	24"	± 1/4"
PANEL "K"	3'-4"	± 1/4"
PANEL "K1"	3'-2½"	± 1/4"
PANEL "K2"	3'-3⅝"	± 1/4"
OVERALL LENGTH	14-1½"	± 3/8"
WEB DEPTH	23⅞"	± 1/4"

ALL PANEL POINTS RESISTANCE WELDED (X). ARC WELDS INDICATED AT SHADED AREAS AND AT BOTTOM CHORD WEB SPLICES. ALL WELD DETAILS SHOWN ON SHEETS ST290 AND ST291.

LETTERS IN HEXAGON INDICATE WELD DETAIL, ie. (A). LETTERS AND NUMBERS IN SQUARES INDICATE RESISTANCE WELD STRENGTH IDENTIFIED IN THE QUALITY CONTROL PROGRAM, ie., R29.

TRUSS DESIGNATION	TOP CHORD TWO ANGLES MK	TYPE STEEL	CHORD SIZE	LENGTH	BOTTOM CHORD TWO ANGLES MK	TYPE STEEL	CHORD SIZE	LENGTH	MAIN WEB "W" MK	TYPE STEEL	DIA	LENGTH	[illegible]	VERTICAL "EST" STRUT MK	TYPE STEEL	DIA	LENGTH	NUMBER REQUIRED
24T13C-1415	6	A242	1½x1¼x.230	14'-1½"	7	A242	1½x1¼x.230	13'-4¾"	3	A242	.75	15'-4½"	3K @ 3'-4" = 10'-0"	12	A242	.75	1'-10⅞"	1

Es END	TRUSS DESIGNATION	WE	VERTICAL ST STRUT MK	TYPE STEEL	DIA	LENGTH	WEB "Wc" MK	TYPE STEEL	PCS.	DIA.	LENGTH
	24T13C-1415	1'-7⅞"	2	A242	.75	1'-11¾"	4	A242	1	.75	2'-5¾"

EL END	TRUSS DESIGNATION	BEARING ANGLES MK	TYPE STEEL	CHORD SIZE	LENGTH	WEv	DIAGONAL "T" STRUT MK	TYPE STEEL	DIA	LENGTH	INCLINED "STv" STRUT MK	TYPE STEEL	DIA	LENGTH	END STIFFENER MK V5 TYPE STEEL	DIA	LENGTH	MK V6 TYPE STEEL	DIA	LENGTH	WEB "Wcv" MK	TYPE STEEL	PCS.	DIA.	LENGTH
	24T13C-1415	—	—	—	—	1'-6¼"	—	—	—	—	2	A242	.75	1'-11¾"	—	—	—	—	—	—	4	A242	1	.75	2'-5½"

REF. DRWG.

7-AB2-1	1-6-68
7-AB2-8	7-22-68
7-AB4-15.1	10-4-68
7-AB4-16	7-22-68
7-AB4-28 & 41	7-22-68
7-AB4-38	10-15-68

PAINT
LACLEDE ELECTROCOAT
RED NO 10001

NO.	DATE	REVISION	BY
2	3-18-69	AS NOTED	G.D.C.
1	2-25-69	WELD DETAIL A1	R.J.P.

BRIDGING TRUSS DETAILS
FOR
WORLD TRADE CENTER - N.Y.C.
FOR
THE PORT OF NEW YORK AUTHORITY

BRIDGING TRUSS 24T13C x 14'-1½" LONG
WORLD TRADE CENTER TOWERS A-B

FABRICATED BY LACLEDE STEEL COMPANY
FABRICATED AT MADISON, ILLINOIS

DESIGN DRAWING NO 7-AB2-8 PLATE

APPROVED FOR FABRICATION FOR P.O.N.Y.A. James White DATE 3/24/69

DRAWN BY [illegible] DATE JAN 24, 1969

APPROVED FOR FABRICATION FOR FABRICATOR DATE

LACLEDE STEEL CO.

CHECKED BY T.M. CHURA DATE JAN. 24, 1969

IN CHARGE OF PROJ.

FABRICATION CONT. NO W.T.C. 221

SHEET NO. BT213C

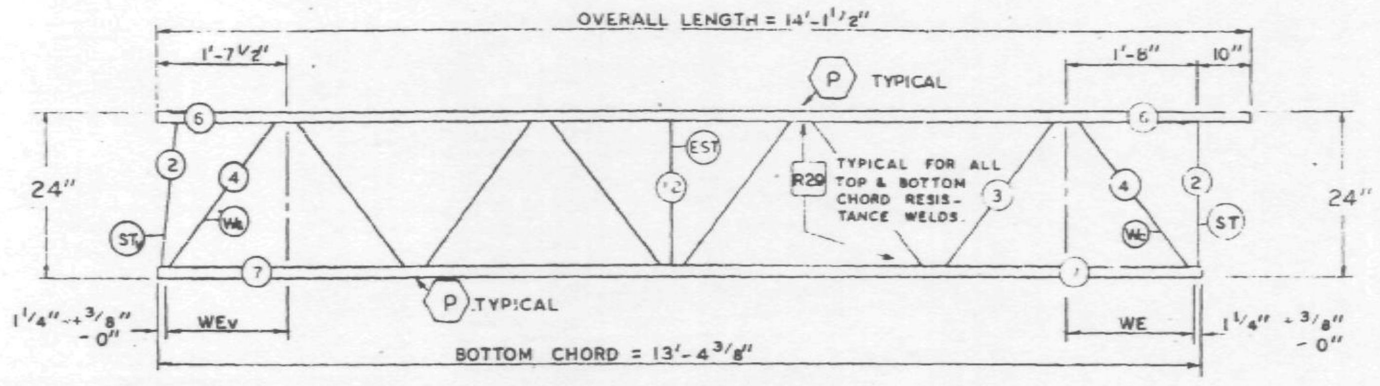

TRUSS ELEVATION

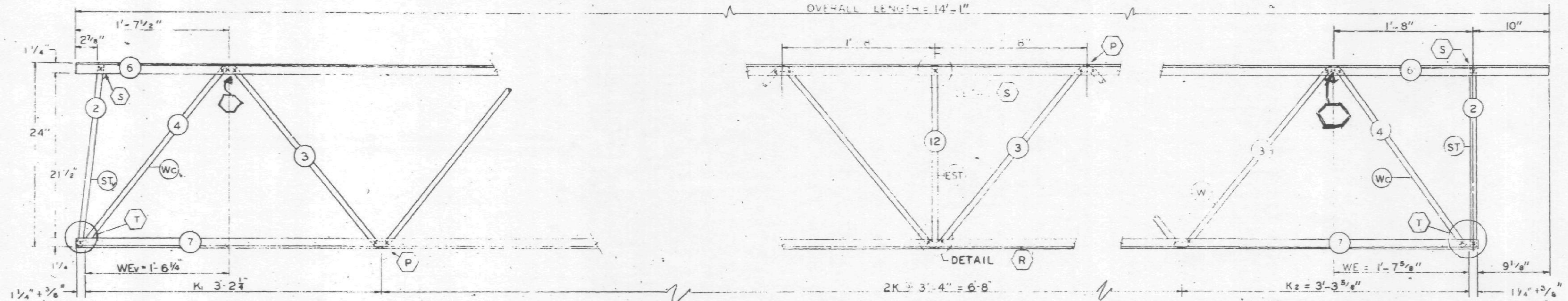

ELEVATION AT EL END

ELEVATION AT ADDED STRUT

ELEVATION AT Es END

FABRICATION REQUIREMENTS	DESIGN	TOLERANCE
CAMBER AT MIDSPAN	0"	+ 3/8"
DESIGN DEPTH	24"	± 1/4"
PANEL "K"	3'-4"	± 1/4"
PANEL "K1"	3'-2 1/4"	± 1/4"
PANEL "K2"	3'-3 5/8"	± 1/4"
OVERALL LENGTH	14'-1 1/2"	± 3/8"
WEB DEPTH	23 7/8"	± 1/4"

ALL PANEL POINTS RESISTANCE WELDED (X). ARC WELDS INDICATED AT SHADED AREAS AND AT BOTTOM CHORD WEB SPLICES. ALL WELD DETAILS SHOWN ON SHEETS ST290 AND ST291.

LETTERS IN HEXAGON INDICATE WELD DETAIL, i.e. (A).

LETTERS AND NUMBERS IN SQUARES INDICATE RESISTANCE WELD STRENGTH IDENTIFIED IN THE QUALITY CONTROL PROGRAM, i.e. [R29].

SKILLING HELLE CHRISTIANSEN ROBERTSON
Structural & Civil Engineers
APPROVED
X APPROVED AS NOTED
RESUBMIT
REJECTED
Date 2/10/69 By SK

REF. DRWG.

7-AB2-1	1-6-68
7-AB2-8	7-22-68
7-AB4-15.1	10-4-68
7-AB4-16	7-22-68
7-AB4-28 & 41	7-22-68
7-AB4-38	10-15-68

PAINT
LACLEDE ELECTROCOAT
RED NO 10001

TRUSS DESIGNATION	TOP CHORD TWO ANGLES				BOTTOM CHORD TWO ANGLES				MAIN WEB "W"					VERTICAL "EST" STRUT				NUMBER REQUIRED
	MK	TYPE STEEL	CHORD SIZE	LENGTH	MK	TYPE STEEL	CHORD SIZE	LENGTH	MK	TYPE STEEL	DIA	LENGTH	NO. OF K	MK	TYPE STEEL	DIA	LENGTH	
24T13C-1415	6	A242	1 1/2 x 1 1/4 x 230	14'-1 1/2"	7	A242	1 1/2 x 1 1/4 x 230	13'-4 3/8"	3	A242	.75	15'-4 1/2"	3K @ 3'-4" = 10'-0"	12	A242	.75	1'-10 7/8"	1

Es END	TRUSS DESIGNATION	WE	VERTICAL "ST" STRUT				WEB "Wc"				
			MK	TYPE STEEL	DIA	LENGTH	MK.	TYPE STEEL	PCS.	DIA.	LENGTH
	24T13C-1415	1'-7 5/8"	2	A242	.75	1'-11 3/4"	4	A242	1	.75	2'-5 3/4"

EL END	TRUSS DESIGNATION	BEARING ANGLES				WEv	DIAGONAL "T" STRUT				INCLINED "STv" STRUT				END STIFFENER MK V5			END STIFFENER MK V6			WEB "Wcv"				
		MK	TYPE STEEL	CHORD SIZE	LENGTH		MK	TYPE STEEL	DIA	LENGTH	MK	TYPE STEEL	DIA	LENGTH	TYPE STEEL	DIA	LENGTH	TYPE STEEL	DIA	LENGTH	MK.	TYPE STEEL	PCS.	DIA.	LENGTH
	24T13C-1415	—	—	—	—	1'-6 1/4"	—	—	—	—	2	A242	.75	1'-11 1/4"	—	—	—	—	—	—	4	A242	1	.75	2'-5 1/2"

NO.	DATE	REVISION	BY

BRIDGING TRUSS DETAILS
FOR
WORLD TRADE CENTER - NYC
FOR
THE PORT OF NEW YORK AUTHORITY

BRIDGING TRUSS 24T13C x 14'-1 1/2" LONG
WORLD TRADE CENTER TOWERS A-B

FABRICATION BY LACLEDE STEEL COMPANY

FABRICATED AT MADISON, ILLINOIS		DESIGN DRAWING NO 7-AB2-8	PLATE
APPROVED FOR FABRICATION BY FOR PONYA	DATE	DRAWN BY [illegible] DATE JAN. 24, 1969	
APPROVED FOR FABRICATION BY FOR FABRICATOR	DATE	CHECKED BY T.M. CHURA DATE JAN. 24, 1969	IN CHARGE OF PROD. DEV.
LACLEDE STEEL CO. DETAILED BY A.C. MEYER		FABRICATION CONT. NO W.T.C. 221	SHEET NO. BT213C

FABRICATION REQUIREMENTS

	DESIGN	TOLERANCE
CAMBER AT MIDSPAN	0"	+3 / 8"
DESIGN DEPTH	24"	±1 / 4"
PANEL "K"	3'-4"	±1 / 4"
WEB DEPTH	23 7 / 8"	±1 / 4"
OVERALL LENGTH	13'-3"	±3 / 8"

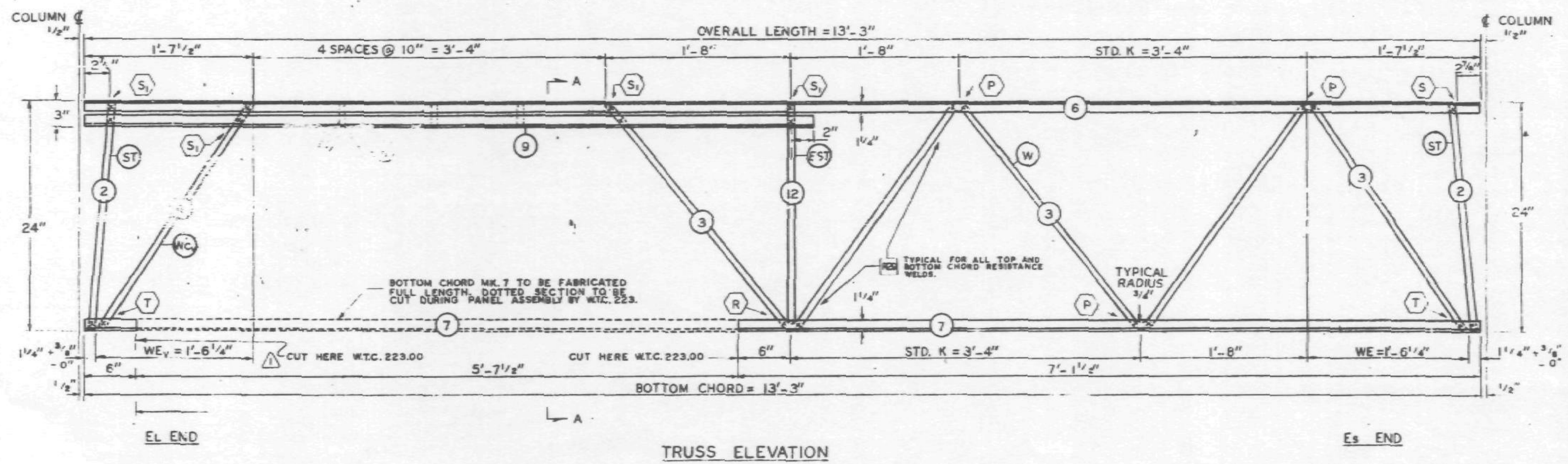

TRUSS ELEVATION

ALL PANEL POINTS RESISTANCE WELDED. (X).
ARC WELDS INDICATED AT SHADED AREAS
AND AT BOTTOM CHORD WEB SPLICES. (▥).
LETTERS IN HEXAGON INDICATE WELD DETAIL. ie., (P).
ALL WELD DETAILS SHOWN ON SHEETS ST 290, ST 291.
LETTERS & NUMBERS IN SQUARES INDICATE
RESISTANCE WELD STRENGTH IDENTIFIED IN THE
QUALITY CONTROL PROGRAM. ie., R29 .

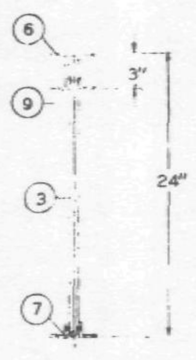

SECTION A-A

△1 REF. DWG.

7-AB2-15	10-4-68
7-AB2-1	10-4-68
7-AB4-22	7-22-68
7-AB4-28	7-22-68
7-AB4-28.1	7-22-68
7-AB4-17.4	10-14-68
SA-124	10-11-68

PAINT
LACLEDE ELECTROCOAT
RED NO. 10001

TRUSS DESIGNATION	TOP CHORD TWO ANGLES				BOTTOM CHORD TWO ANGLES				MAIN WEB W					VERTICAL EST STRUT				
	MK.	TYPE STEEL	CHORD SIZE	LENGTH	MK.	TYPE STEEL	CHORD SIZE	LENGTH	MK.	TYPE STEEL	DIA.	LENGTH	NO. OF K	MK.	TYPE STEEL	DIA.	PCS.	LENGTH
24T13D-133	6	A242	1 1/2"x1 1/4"x.23"	13'-3"	7	A242	1 1/2"x1 1/4"x.23"	13'-3"	3	A242	.75	12'-8 3/8"	2 1/2 K @ 3'-4" = 8'-4"	12	A242	.75	1	1'-10 7/8"

Es END	TRUSS DESIGNATION	INCLINED ST STRUT				WE
		MK.	TYPE STEEL	DIA.	LENGTH	
	24T13D-133	2	A242	.75	1'-11 3/4"	1'-6 1/4"

EL	TRUSS DESIGNATION	INCLINED ST STRUT				WE_V	WEB "WC_V"					BEARING ANGLES				END STIFFENER MK. V7			
		MK.	TYPE STEEL	DIA.	LENGTH		MK.	TYPE STEEL	DIA.	PCS.	LENGTH	MK.	TYPE STEEL	CHORD SIZE	LENGTH	TYPE STEEL	DIA.	LENGTH	PCS.
	24T13D-133	2	A242	.75	1'-11 3/4"	1'-6 1/4"	4	A242	.75	1	2'-5 1/8"	9	A242	1 1/2"x1 1/4"x.23"	6'-9 7/8"	A242	.75	2 7/8"	3

NO.	DATE	REVISION	BY
△1	10-24-68	(NOTE) "CUT HERE" (EL END)	T.M.C.

BRIDGING TRUSS DETAILS
FOR
WORLD TRADE CENTER - N.Y.C.
FOR
THE PORT OF NEW YORK AUTHORITY

BRIDGING TRUSS 24T13D x 13'-3" LONG
WORLD TRADE CENTER TOWERS A & B

FABRICATION BY: LACLEDE STEEL COMPANY

FABRICATED AT MADISON, ILLINOIS		DESIGN DRAWING NO. 7-AB2-15	PLATE
APPROVED FOR FABRICATION BY: James White FOR P.O.N.Y.A.	DATE 10/30/68	DRAWN BY: g.d.c. DATE OCT. 15, 1968	
APPROVED FOR FABRICATION BY: FOR FABRICATOR	DATE	CHECKED BY: T.M. CHURA DATE OCT. 15, 1968	IN CHARGE OF PROD. DEV.
DETAILED BY: A. CARL WEBER		FABRICATION CONT. NO. W.T.C. 221	SHEET NO. ST-213D

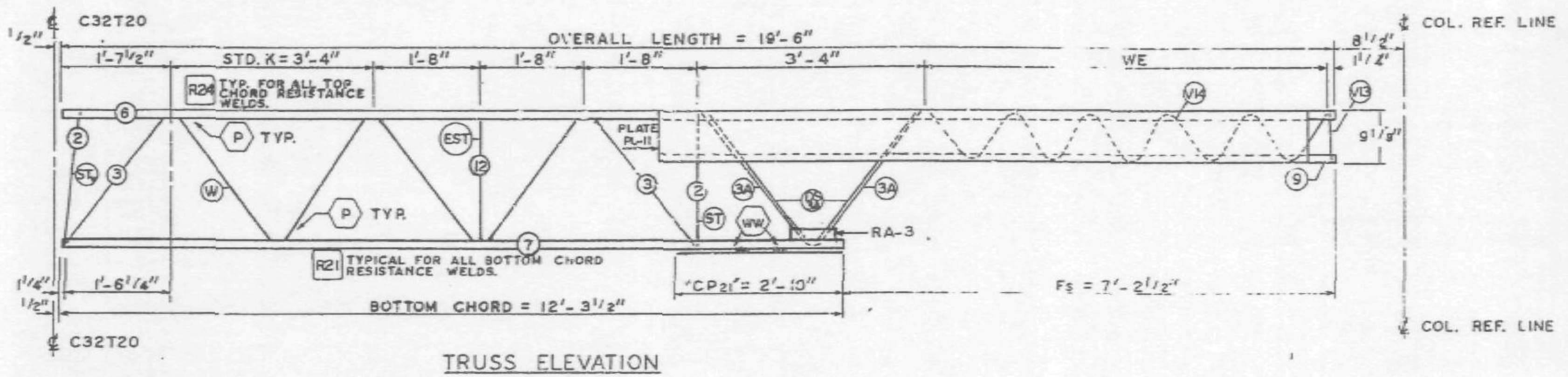

TRUSS ELEVATION

FABRICATION REQUIREMENTS		
	DESIGN	TOLERANCE
CAMBER AT MIDSPAN	0"	+ 3/8"
DESIGN DEPTH	24"	± 1/4"
PANEL "K"	3'-4"	± 1/4"
OVERALL LENGTH	19'-6"	± 3/8"
WEB DEPTH	23 7/8"	± 1/4"

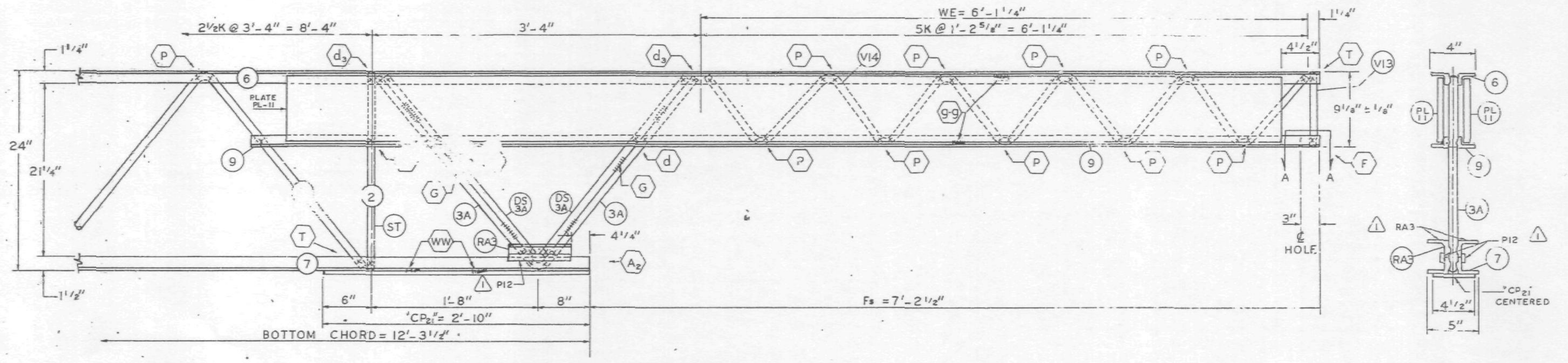

Es END (COLUMN)

ALL PANEL POINTS RESISTANCE WELDED. (X).
ARC WELDS INDICATED AT SHADED AREAS AND AT BOTTOM CHORD WEB SPLICES. (IIIIIII).
LETTERS AND NUMBERS IN SQUARES INDICATE RESISTANCE WELD STRENGTH IDENTIFIED IN THE QUALITY CONTROL PROGRAM. ie., R21.
LETTERS IN HEXAGONS INDICATE WELD DETAILS. ie., (P).
ALL WELD DETAILS SHOWN ON SHEETS ST 290, ST 291, ST 293 & ST 294.
STIFFENER PL SHOWN ON SHEET ST 408.
CHORD PLATE DETAILS SHOWN ON SHEET ST 283 & ST 284.

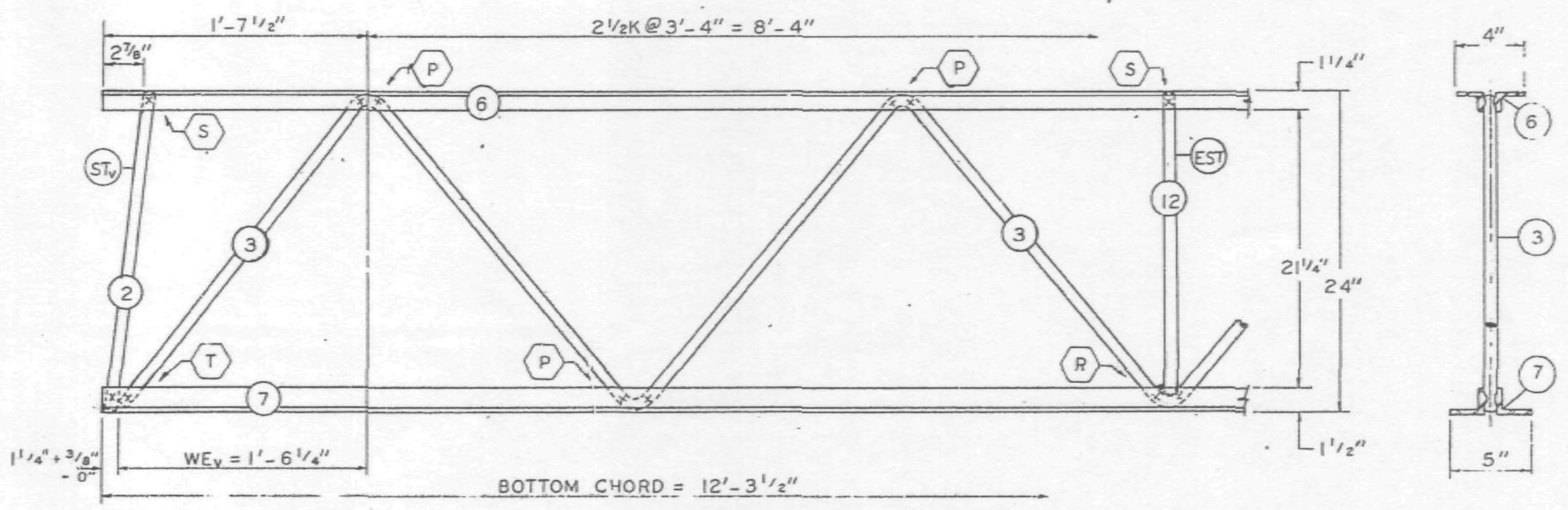

EL END (CORE)

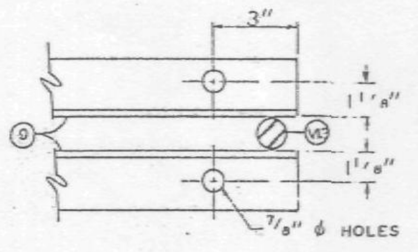

SECTION A-A

REF. DRWG.

7-AB2-14	10-4-68
7-AB1-55	10-15-68
7-AB4-54	10-4-68
7-AB4-58	10-4-68
SA-124	10-11-68

PAINT
LACLEDE ELECTROCOAT
RED. NO. 10001

TRUSS DESIGNATION	TOP CHORD TWO ANGLES				BOTTOM CHORD TWO ANGLES				MAIN WEB "W"					VERTICAL "EST" STRUT					TRUSS DATA		REINFORCING ANGLES					SPECIAL PLATES				
	MK.	TYPE STEEL	CHORD SIZE	LENGTH	MK.	TYPE STEEL	CHORD SIZE	LENGTH	MK.	TYPE STEEL	DIA.	LENGTH	NO. OF K	MK.	TYPE STEEL	DIA.	PCS.	LENGTH			MK.	PCS.	TYPE STEEL	ANGLE SIZE	LENGTH	MK.	PCS.	TYPE STEEL	SIZE	LENGTH
24T14A - 196	6	A242	1½"x1¼"x.275"	19'-6"	7	A242	2"x1½"x.25"	12'-3½"	3 3A	A242 A242	.98 .98	15'-1½" 5'-1½"	3K @ 3'-4" = 10'-0" 1K @ 3'-4" = 3'-4"	12	A242	.98	1	1'-10⅞"			RA3	2	A242	2"x1½"x.25"	7½"	P12	2	A36	1"x3/8"	7½"

Es END TRUSS DESIGNATION	VERTICAL "ST" STRUT				BEARING ANGLES				WE	DOUBLE STRUT				CHORD PLATE				END STIFFENER MK. V13			END STIFFENER MK. V14			STIFFENER PLATE				
	MK.	TYPE STEEL	DIA.	LENGTH	MK.	TYPE STEEL	CHORD SIZE	LENGTH		MK.	TYPE STEEL	DIA.	LENGTH (2 REQ'D)	MK.	TYPE STEEL	SIZE	LENGTH	TYPE STEEL	DIA.	LENGTH	TYPE STEEL	DIA.	LENGTH	MK.	TYPE STEEL	PLATE SIZE	LENGTH	PCS.
24T14A - 196	2	A242	.98	1'-11¾"	9	A242	1½"x1¼"x.275"	10'-9½"	6'-1¼"	DS 3A	A242	.98	2'-3¾"	CP 21	A36	4"x.39	2'-10"	A242	.98	9"	A242	.98	9'-3"	PL 11	A36	8"x.75"	10'-0"	2

EL END TRUSS DESIGNATION	INCLINED "STv" STRUT				WEv
	MK.	TYPE STEEL	DIA.	LENGTH	
24T14A - 196	2	A242	.98	1'-11¾"	1'-6¼"

NO.	DATE	REVISION	BY
1	12-26-68	AS NOTED	G.D.C.

BRIDGING TRUSS DETAILS
FOR
WORLD TRADE CENTER - N.Y.C.
FOR
THE PORT OF NEW YORK AUTHORITY

BRIDGING TRUSS 24T14A x 19'-6" LONG
WORLD TRADE CENTER TOWERS A & B

FABRICATION BY: LACLEDE STEEL COMPANY
FABRICATED AT: MADISON, ILLINOIS
APPROVED FOR FABRICATION BY: [signature] FOR P.O.N.Y.A. DATE 1/20/69
APPROVED FOR FABRICATION BY: FOR FABRICATOR DATE
DESIGN DRAWING NO.
PLATE
DRAWN BY: gdc DATE OCT. 31, 1968
CHECKED BY: T.M. CHURA DATE OCT. 31, 1968
IN CHARGE OF PROD. DEV.
DETAILED BY: A CARL WEBER
FABRICATION CONT. NO. W.T.C. 221
SHEET NO. BT 214 A

FABRICATION REQUIREMENTS		
	DESIGN	TOLERANCE
CAMBER AT MIDSPAN	0"	+3/8"
DESIGN DEPTH	24"	±1/4"
PANEL "K"	3'-4"	±1/4"
WEB DEPTH	23 7/8"	±1/4"
OVERALL LENGTH	13'-3"	±3/8"

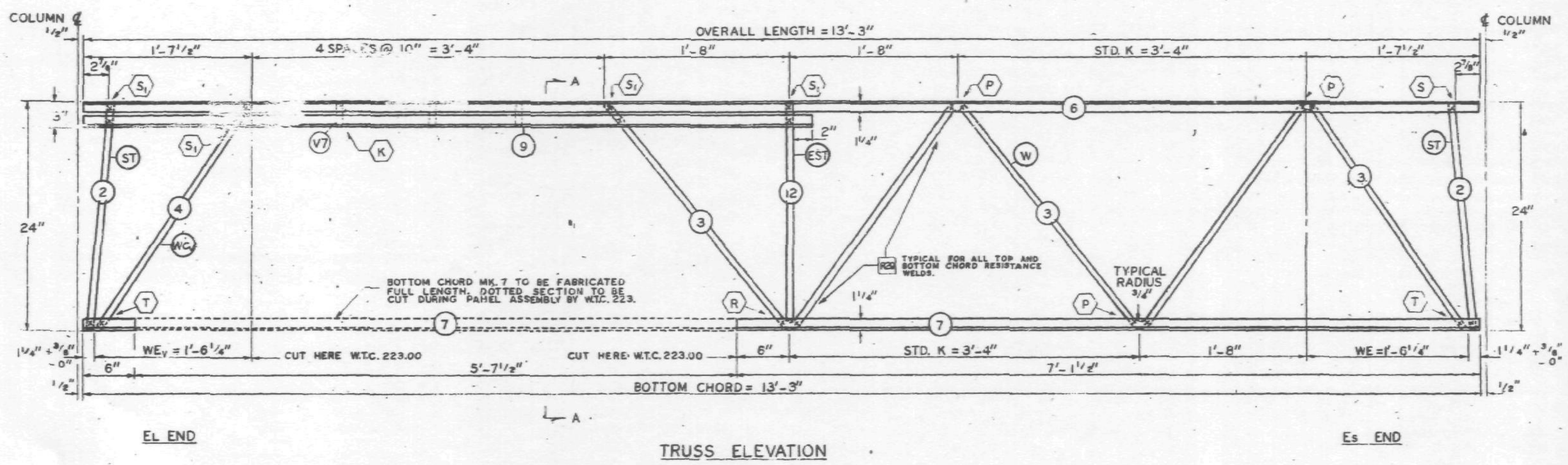

TRUSS ELEVATION

ALL PANEL POINTS RESISTANCE WELDED. (X).
ARC WELDS INDICATED AT SHADED AREAS
AND AT BOTTOM CHORD WEB SPLICES. (||||||).
LETTERS IN HEXAGON INDICATE WELD DETAIL. ie. (P).
ALL WELD DETAILS SHOWN ON SHEETS ST 290, ST 291.
LETTERS & NUMBERS IN SQUARES INDICATE
RESISTANCE WELD STRENGTH IDENTIFIED IN THE
QUALITY CONTROL PROGRAM. ie., R29 .

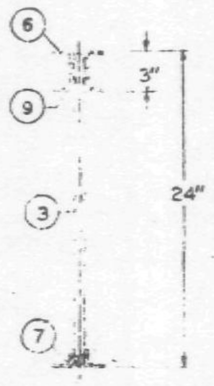

SECTION A-A

REF. DWG.

7-A82-15	8-1-68
7-A82-1	8-15-68
7-A84-22	7-22-68
7-A84-28	7-22-66
7-A84-28.1	7-22-68
7-A84-17.4	8-15-68
SA-124	8-1-68

PAINT
LACLEDE ELECTROCOAT
RED NO. 10001

TRUSS DESIGNATION	TOP CHORD TWO ANGLES				BOTTOM CHORD TWO ANGLES				MAIN WEB "W"					VERTICAL "EST" STRUT				
	MK.	TYPE STEEL	CHORD SIZE	LENGTH	MK.	TYPE STEEL	CHORD SIZE	LENGTH	MK.	TYPE STEEL	DIA.	LENGTH	NO. OF K	MK.	TYPE STEEL	DIA.	PCS.	LENGTH
24T13D-133	6	A242	1½"x1¼"x.23"	13'-3"	7	A242	1½"x1¼"x.23"	13'-3"	3	A242	.75	12'-8⅜"	2½K @ 3'-4" = 8'-4"	12	A242	.75	1	1'-10⅞"

Es END	TRUSS DESIGNATION	INCLINED "ST" STRUT				WE
		MK.	TYPE STEEL	DIA.	LENGTH	
	24T13D-133	2	A242	.75	1'-11¾"	1'-6¼"

EL END	TRUSS DESIGNATION	INCLINED "ST" STRUT				WE_V	WEB "Wc_V"					BEARING ANGLES				END STIFFENER MK. V7			
		MK.	TYPE STEEL	DIA.	LENGTH		MK.	TYPE STEEL	DIA.	PCS.	LENGTH	MK.	TYPE STEEL	CHORD SIZE	LENGTH	TYPE STEEL	DIA.	LENGTH	PCS.
	24T13D-133	2	A242	.75	1'-11¾"	1'-6¼"	4	A242	.75	1	2'-5½"	9	A242	1½"x1¼"x.23"	6'-9⅞"	A242	.75	2⅞"	3

NO.	DATE	REVISION	BY

BRIDGING TRUSS DETAILS
FOR
WORLD TRADE CENTER - N.Y.C.
FOR
THE PORT OF NEW YORK AUTHORITY

BRIDGING TRUSS 24T13D x 13'-3" LONG
WORLD TRADE CENTER TOWERS A & B

FABRICATION BY: LACLEDE STEEL COMPANY

FABRICATED AT MADISON, ILLINOIS		DESIGN DRAWING NO. 7-A82-15	PLATE
APPROVED FOR FABRICATION BY: James White FOR P.O.N.Y.A.	DATE 10/23/68	DRAWN BY: g.d.c. DATE OCT. 15, 1968	
APPROVED FOR FABRICATION BY: FOR FABRICATOR	DATE	CHECKED BY: T.M. CHURA DATE OCT. 15, 1968	IN CHARGE OF PROD. DEV.
DETAILED BY: A. CARL WEBER		FABRICATION CONT. NO. W.T.C. 221	SHEET NO. BT 213 D

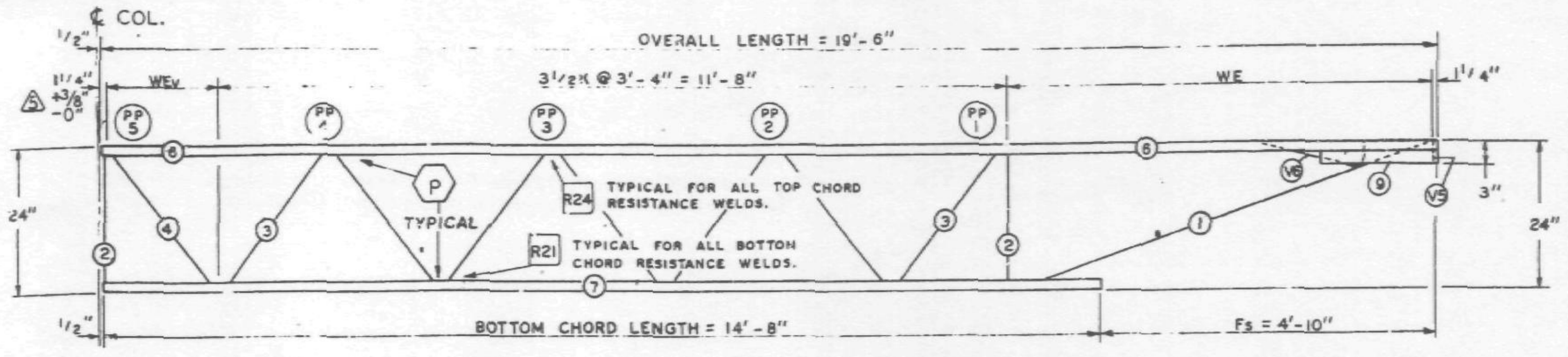

EL END

Es END

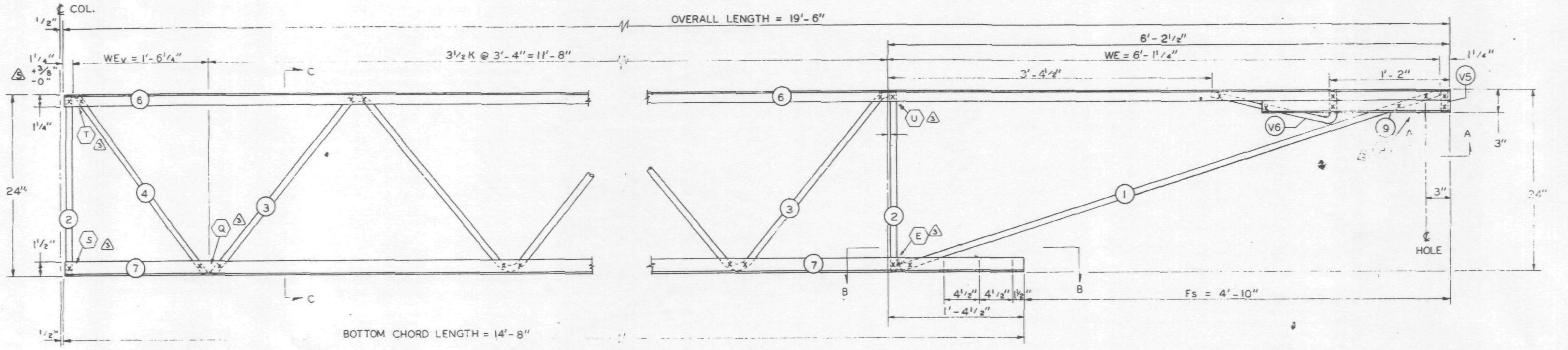

EL END (CORE)

Es END (COL.)

FABRICATION REQUIREMENTS	DESIGN	TOLERANCE
CAMBER AT MIDSPAN	0"	+ 3/8"
DESIGN DEPTH	24"	± 1/4"
PANEL "K"	3'-4"	± 1/4"
PANEL "K1"	——	——
WEB DEPTH	23 7/8"	± 1/4"
OVERALL LENGTH	19' - 6"	± 3/8"

ALL PANEL POINTS RESISTANCE WELDED (x).
ARC WELDS INDICATED AT SHADED AREAS AND AT BOTTOM CHORD WEB SPLICES.
ALL WELD DETAILS SHOWN ON SHEETS ST290 AND ST291.
LETTERS IN HEXAGON INDICATE WELD DETAIL, ie., (A).
LETTERS AND NUMBERS IN SQUARES INDICATE RESISTANCE WELD STRENGTH IDENTIFIED IN THE QUALITY CONTROL PROGRAM, ie., R21.
SEE SHEET ST296 FOR V5 & V6 DETAILS.

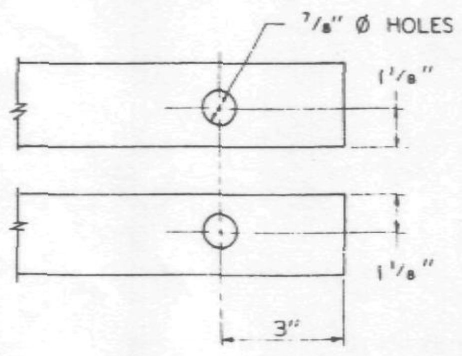

SECTION A-A

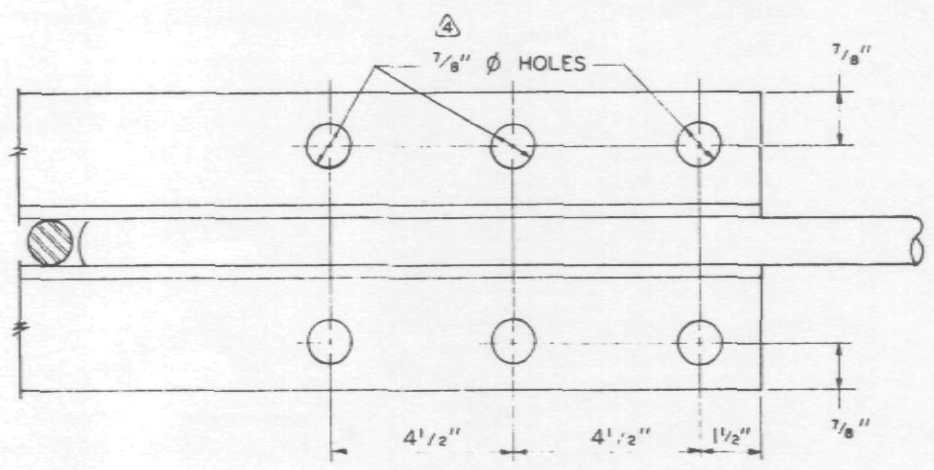

SECTION B-B

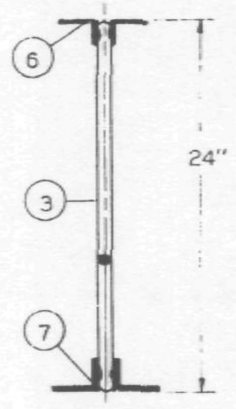

SECTION C-C

REF. DWGS.

7-AB2-1	4-1-68
7-AB2-9	4-1-68
7-AB4-15,1	1-3-68
7-AB4-16 & 19	1-3-68
7-AB4-28 & 41	1-3-68
7-AB4-18 & 38	4-1-68

PAINT
LACLEDE ELECTROCOAT
RED NO. 10001

TRUSS DESIGNATION	TOP CHORD TWO ANGLES				BOTTOM CHORD TWO ANGLES				MAIN WEB "W"					TRUSS DATA		FILLER	
	MK.	TYPE STEEL	CHORD SIZE	LENGTH	MK.	TYPE STEEL	CHORD SIZE	LENGTH	MK.	TYPE STEEL	DIA.	LENGTH	NO. OF K			NO.	DIA.
24T14 -196	6	A242	1½" x 1¼" x .275"	19'-6"	7	A242	2" x 1½" x .25"	14'-8"	3	A242	.98	17'-11¼"	3½K @ 3'-4" = 11'-8"			—	—

Es END	TRUSS DESIGNATION	WE	VERTICAL "ST" STRUT				DIAGONAL "T" STRUT				WEB "DS1"				END STIFFENER MK V5			END STIFFENER MK. V6			BEARING ANGLES			
			MK.	TYPE STEEL	DIA.	LENGTH	MK.	TYPE STEEL	DIA.	LENGTH	MK.	TYPE STEEL	DIA.	LENGTH	TYPE STEEL	DIA	LENGTH	TYPE STEEL	DIA.	LENGTH	MK.	TYPE STEEL	CHORD SIZE	LENGTH
	24T14 -196	6'-1¼"	2	A242	.98	1'-11¾"	1	A242	.98	6"-2⅞"	—	—	—	——	A242	.98	2⅞"	A242	.98	1'-11¼"	9	A242	2" x 1½" x .25	2'-3"

EL END	TRUSS DESIGNATION	VERTICAL "ST" STRUT				WEv	WEB "WT"				
		MK.	TYPE STEEL	DIA.	LENGTH		MK.	TYPE STEEL	PCS.	DIA.	LENGTH
	24T14 -196	2	A242	.98	1'-11¾"	1'-6¼"	4	A242	1	.98	2'-5½"

NO.	DATE	REVISION	BY
6	6-27-69	TOLERANCES	G.D.C.
5	9-6-68	END DIST. (2)	T.M.G.
4	7-17-68	HOLE SIZE - SECTION B-B	T.M.C.
3	7-8-68	AS NOTED	T.M.C.
2	7-3-68	MAIN WEB, WT	T.M.C.
1	6-26-68	GENERAL	T.M.C.

FOR
WORLD TRADE CENTER - N.Y.C.
FOR
THE PORT OF NEW YORK AUTHORITY

BRIDGING TRUSS 24T14 x 19'-6" LONG

FABRICATION BY: LACLEDE STEEL COMPANY
FABRICATED AT MADISON, ILLINOIS
DESIGN DRAWING NO. 7-AB2-9 PLATE
APPROVED FOR FABRICATION BY ______ FOR P.O.N.Y.A. DATE 7/2/69
DRAWN BY: ___ DATE APR. 20, 1968
APPROVED FOR FABRICATION BY ______ FOR FABRICATOR DATE
CHECKED BY: T.M. CHURA DATE APR. 20, 1968
IN CHARGE OF PROD. DEV.
DETAILED BY: A.C. WEBER
FABRICATION CONT. NO. W.T.C. 221
SHEET NO. BT 214

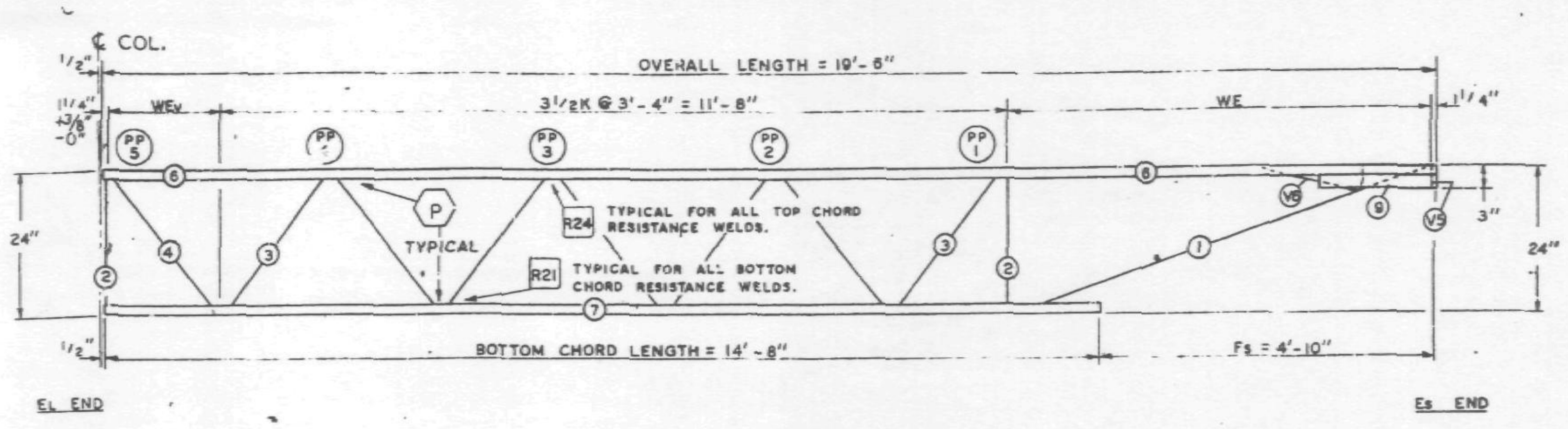

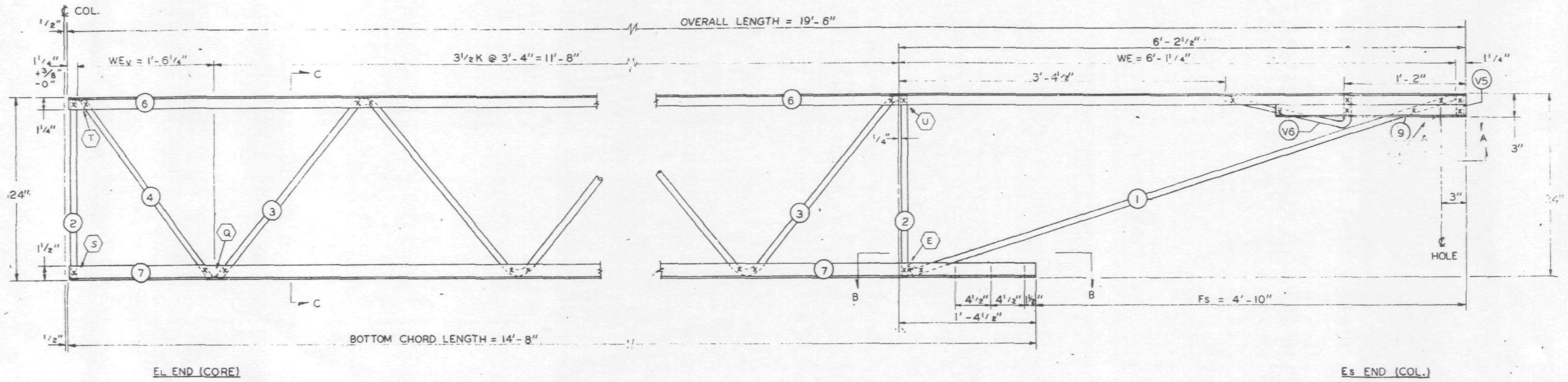

ALL PANEL POINTS RESISTANCE WELDED (x).
ARC WELDS INDICATED AT SHADED AREAS
AND AT BOTTOM CHORD WEB SPLICES ( ).
ALL WELD DETAILS SHOWN ON SHEETS ST290
AND ST291.
LETTERS IN HEXAGON INDICATE WELD DETAIL, ie., (A).
LETTERS AND NUMBERS IN SQUARES INDICATE RE-
SISTANCE WELD STRENGTH IDENTIFIED IN THE
QUALITY CONTROL PROGRAM, ie., [R21].
SEE SHEET ST296 FOR V5 & V6 DETAILS.

FABRICATION REQUIREMENTS	DESIGN	TOLERANCE
CAMBER AT MIDSPAN	0"	+ 3/8"
DESIGN DEPTH	24"	± 1/4"
PANEL "K"	3'-4"	± 1/4"
PANEL "K1"	—	—
WEB DEPTH	23 7/8"	± 1/4"
OVERALL LENGTH	19'-6"	± 3/8"

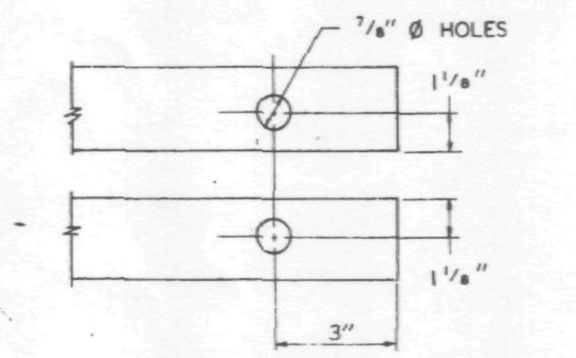

SECTION A-A

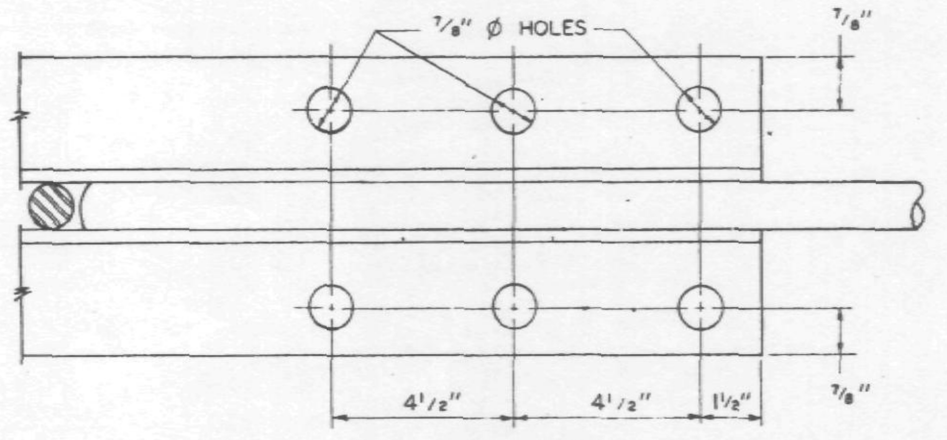

SECTION B-B

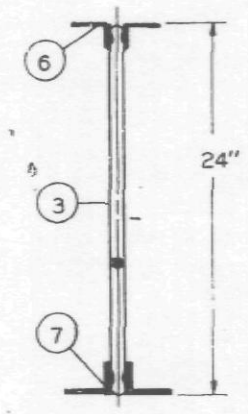

SECTION C-C

REF. DWGS.

7-AB2-1	1-6-69
7-AB2-9	1-6-69
7-AB4-15.1	10-4-68
7-AB4-16	7-22-68
7-AB4-28	7-22-68
7-AB4-18	1-6-69

PAINT
LACLEDE ELECTROCOAT
RED NO. 10001

TRUSS DESIGNATION	TOP CHORD TWO ANGLES				BOTTOM CHORD TWO ANGLES				MAIN WEB "W"					TRUSS DATA		FILLER	
	MK.	TYPE STEEL	CHORD SIZE	LENGTH	MK.	TYPE STEEL	CHORD SIZE	LENGTH	MK.	TYPE STEEL	DIA.	LENGTH	NO. OF K			NO.	DIA.
24T14B-196	6	A242	1 1/2" x 1 1/4" x .275"	19'-6"	7	A242	2" x 1 1/2" x .25"	14'-8"	3	A242	.98	17'-11 1/4"	3 1/2K @ 3'-4" = 11'-8"			—	—

Es END	TRUSS DESIGNATION	WE	VERTICAL "ST" STRUT				DIAGONAL "T" STRUT				WEB "DS1"				END STIFFENER MK. V5			END STIFFENER MK. V6			BEARING ANGLES			
			MK.	TYPE STEEL	DIA.	LENGTH	MK.	TYPE STEEL	DIA.	LENGTH	MK.	TYPE STEEL	DIA.	LENGTH	TYPE STEEL	DIA.	LENGTH	TYPE STEEL	DIA.	LENGTH	MK.	TYPE STEEL	CHORD SIZE	LENGTH
	24T14B-196	6'-1 1/4"	2	A242	.98	1'-11 3/4"	1	A242	.98	6"-2 7/8"	—	—	—	—	A242	.98	2 7/8"	A242	.98	1'-11 1/4"	9	A242	2" x 1 1/2" x .25	2'-3"

EL END	TRUSS DESIGNATION	VERTICAL "ST" STRUT				WEV	WEB "WT"				
		MK.	TYPE STEEL	DIA.	LENGTH		MK.	TYPE STEEL	PCS.	DIA.	LENGTH
	24T14B-196	2	A242	.98	1'-11 3/8"	1'-6 1/4"	4	A242	1	.98	2'-5 1/2"

NO.	DATE	REVISION	BY
1	6-27-69	TOLERANCES	G.D.C.

FOR
WORLD TRADE CENTER - N.Y.C.
FOR
THE PORT OF NEW YORK AUTHORITY

BRIDGING TRUSS 24T14B x 19'-6" LONG

FABRICATION BY: LACLEDE STEEL COMPANY
FABRICATED AT MADISON, ILLINOIS
DESIGN DRAWING NO. 7-AB2-9 PLATE
APPROVED FOR FABRICATION BY ______ FOR P.O.N.Y.A DATE 7/2/69
DRAWN BY: DATE JAN. 20, 1969
APPROVED FOR FABRICATION BY ______ FOR FABRICATOR DATE
CHECKED BY: T.M. CHURA DATE JAN. 20, 1969
IN CHARGE OF PROD. DEV.
DETAILED BY A.C. WEBER
FABRICATION CONT. NO. W.T.C 221
SHEET NO. BT 214B

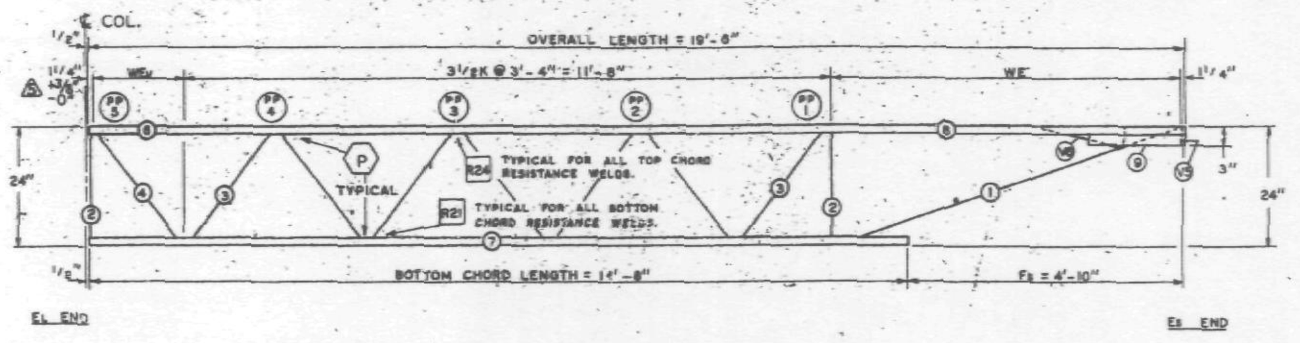

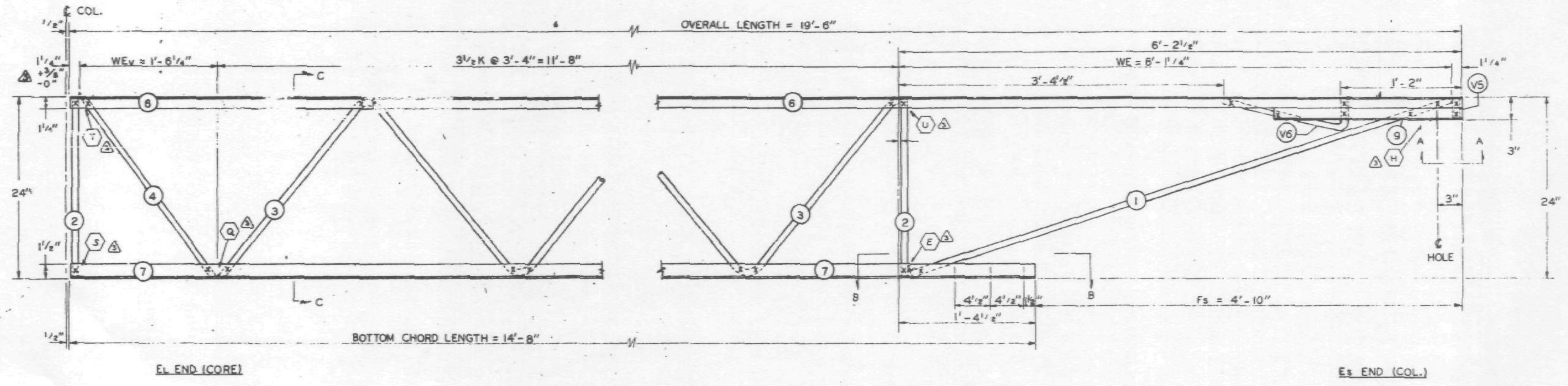

FABRICATION REQUIREMENTS		
	DESIGN	TOLERANCE
CAMBER AT MIDSPAN	0"	+ 3/8"
DESIGN DEPTH	24"	+ 1/4"
PANEL "K"	3'-4"	+ 1/4"
PANEL "K1"	——	——
WEB DEPTH	23 7/8"	+ 1/4"
OVERALL LENGTH	19'-6"	+ 3/8"

ALL PANEL POINTS RESISTANCE WELDED (x).
ARC WELDS INDICATED AT SHADED AREAS AND AT BOTTOM CHORD WEB SPLICES (IIIIII).
ALL WELD DETAILS SHOWN ON SHEETS ST290 AND ST291.
LETTERS IN HEXAGON INDICATE WELD DETAIL, ie., (A).
LETTERS AND NUMBERS IN SQUARES INDICATE RESISTANCE WELD STRENGTH IDENTIFIED IN THE QUALITY CONTROL PROGRAM, ie., R21.
SEE SHEET ST296 FOR V5 & V6 DETAILS.

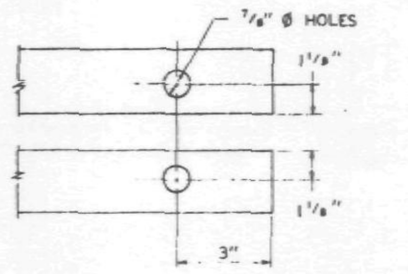

SECTION A-A

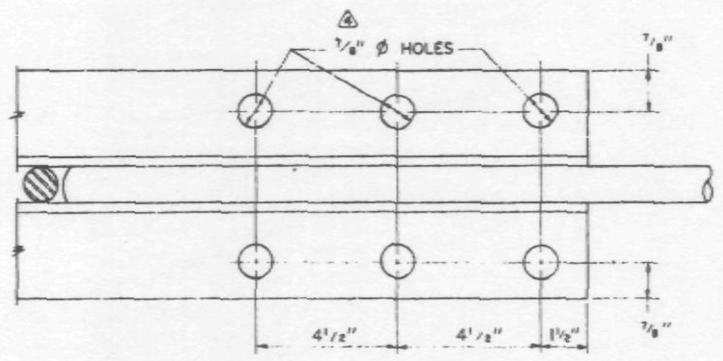

SECTION B-B

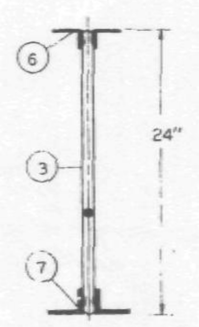

SECTION C-C

REF. DWGS.

7-AB2-1	4-1-68
7-AB2-9	4-1-68
7-AB4-15,1	1-3-68
7-AB4-16 & 19	1-3-68
7-AB4-28 & 41	1-3-68
7-AB4-18 & 38	4-1-68

PAINT
LACLEDE ELECTROCOAT
RED NO. 10001

TRUSS DESIGNATION	TOP CHORD TWO ANGLES				BOTTOM CHORD TWO ANGLES				MAIN WEB "W"					TRUSS DATA		FILLER	
	MK.	TYPE STEEL	CHORD SIZE	LENGTH	MK.	TYPE STEEL	CHORD SIZE	LENGTH	MK.	TYPE STEEL	DIA.	LENGTH	NO. OF K			NO.	DIA.
24T14 -196	6	A242	1 1/2" x 1 1/4" x .275	19'-6"	7	A242	2" x 1 1/2" x .25"	14'-8"	3	A242	.98	17'-11 1/4"	$3^1/_2$K @ 3'-4" = 11'-8"			—	—

Es END	TRUSS DESIGNATION	WE	VERTICAL "ST" STRUT				DIAGONAL "T" STRUT				WEB "DS1"				END STIFFENER MK. V5			END STIFFENER MK. V6			BEARING ANGLES			
			MK.	TYPE STEEL	DIA.	LENGTH	MK.	TYPE STEEL	DIA.	LENGTH	MK.	TYPE STEEL	DIA.	LENGTH	TYPE STEEL	DIA.	LENGTH	TYPE STEEL	DIA.	LENGTH	MK.	TYPE STEEL	CHORD SIZE	LENGTH
	24T14 -196	8'-1 1/4"	2	A242	.98	1'-11 3/4"	1	A242	.98	6'-2 7/8"	—	——	—	——	A242	.98	2 7/8"	A242	.98	1'-11 1/4"	9	A242	2" x 1 1/2" x .25	2'-3"

EL END	TRUSS DESIGNATION	VERTICAL "ST" STRUT				WEv	WEB "WT"				
		MK.	TYPE STEEL	DIA.	LENGTH		MK.	TYPE STEEL	PCS.	DIA.	LENGTH
	24T14 -196	2	A242	.98	1'-11 3/4"	1'-8 1/4"	4	A242	1	.98	2'-5 1/8"

NO.	DATE	REVISION	BY
5	9-6-68	END DIST. (2)	T.M.C.
4	7-17-68	HOLE SIZE - SECTION B-B	T.M.C.
3	7-8-68	AS NOTED	T.M.C.
2	7-3-68	MAIN WEB, WT	T.M.C.
1	6-26-68	GENERAL	T.M.C.

FOR
WORLD TRADE CENTER - N.Y.C.
FOR
THE PORT OF NEW YORK AUTHORITY

BRIDGING TRUSS 24T14 x 19'-6" LONG

FABRICATION BY LACLEDE STEEL COMPANY

FABRICATED AT MADISON, ILLINOIS		DESIGN DRAWING NO 7-AB2-9	PLATE
APPROVED FOR FABRICATION BY FOR PONYA	DATE 9/10/68	DRAWN BY DATE APR. 20, 1968	
APPROVED FOR FABRICATION BY FOR FABRICATOR	DATE	CHECKED BY T.M. CHURA DATE APR. 20, 1968	IN CHARGE OF PROD. DEV.
DETAILED BY A.C. WEBER		FABRICATION CONT. NO. WTC 221	SHEET NO BT 214

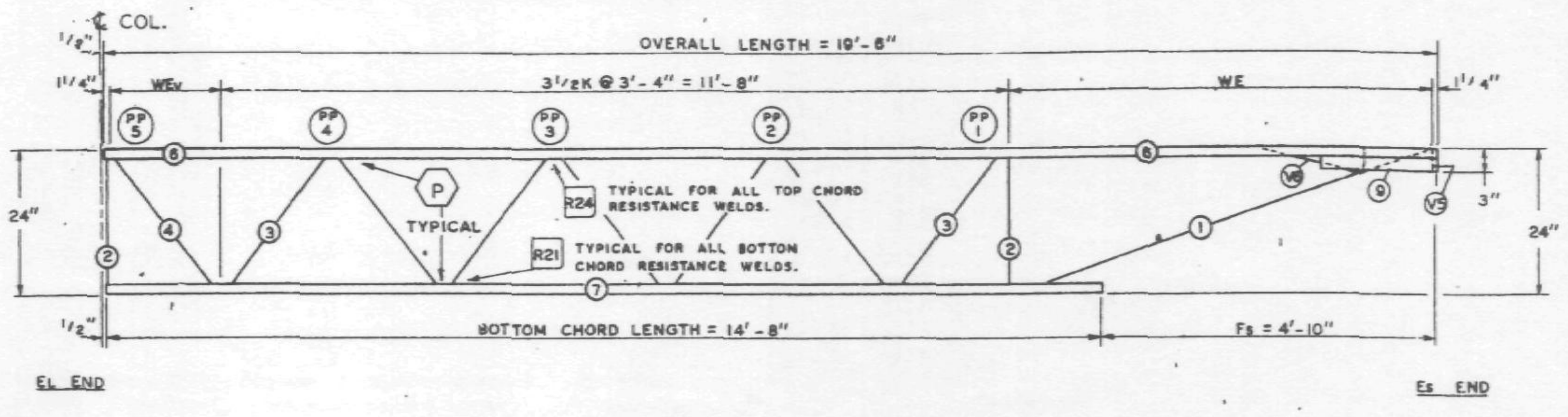

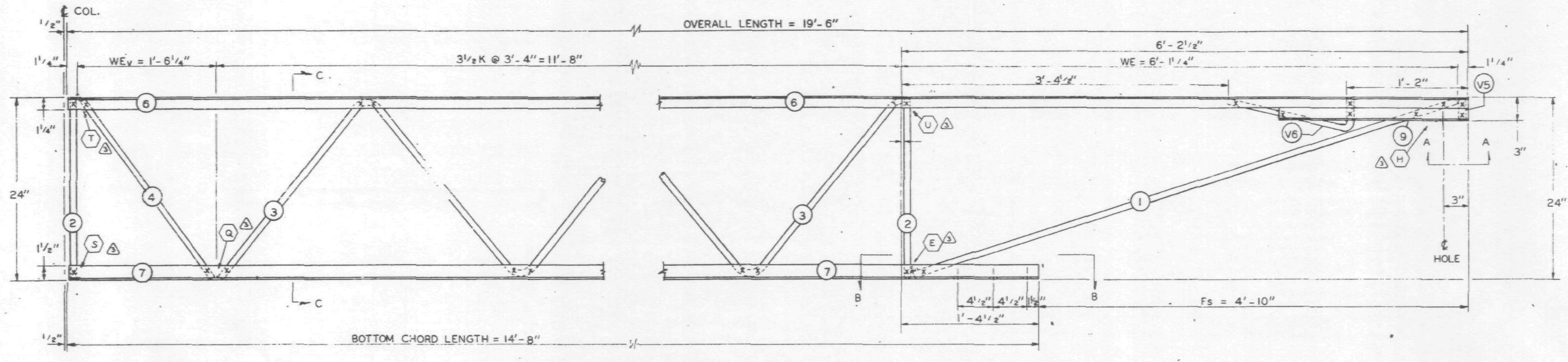

EL END (CORE)

Es END (COL.)

FABRICATION REQUIREMENTS

	DESIGN	TOLERANCE
CAMBER AT MIDSPAN	0"	+ 3/8"
DESIGN DEPTH	24"	+ 1/4"
PANEL "K"	3'-4"	+ 1/4"
PANEL "K$_1$"	—	—
WEB DEPTH	23 7/8"	+ 1/4"
OVERALL LENGTH	19' - 6"	+ 3/8"

ALL PANEL POINTS RESISTANCE WELDED (x).
ARC WELDS INDICATED AT SHADED AREAS AND AT BOTTOM CHORD WEB SPLICES.
ALL WELD DETAILS SHOWN ON SHEETS ST290 AND ST291.
LETTERS IN HEXAGON INDICATE WELD DETAIL, ie., ⟨A⟩.
LETTERS AND NUMBERS IN SQUARES INDICATE RESISTANCE WELD STRENGTH IDENTIFIED IN THE QUALITY CONTROL PROGRAM, ie., R21.
SEE SHEET ST296 FOR V5 & V6 DETAILS.

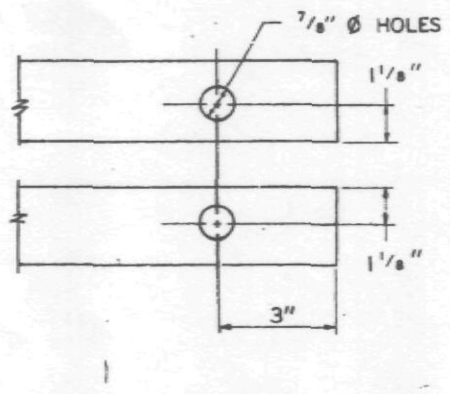

SECTION A-A

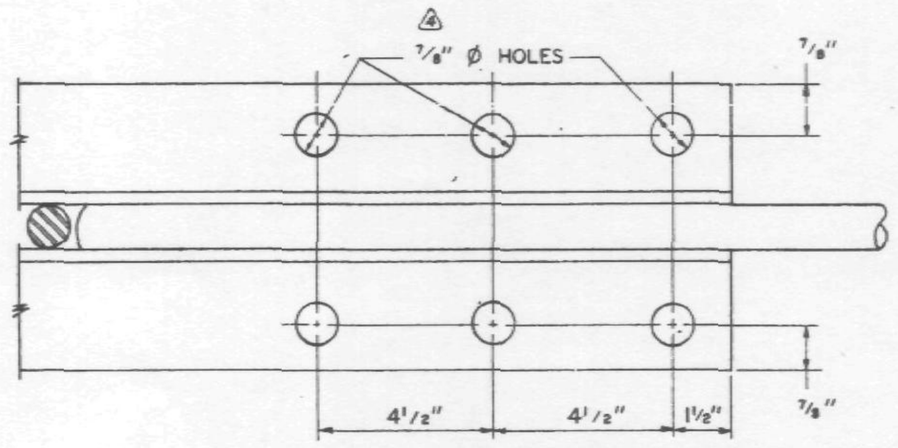

SECTION B-B

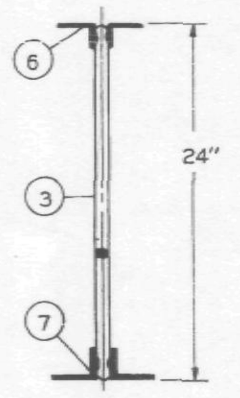

SECTION C-C

REF. DWGS.

7-AB2-1	4-1-68
7-AB2-9	4-1-68
7-AB4-15,1	1-3-68
7-AB4-16 & 19	1-3-68
7-AB4-28 & 41	1-3-68
7-AB4-18 & 38	4-1-68

PAINT
LACLEDE ELECTROCOAT
RED NO. 10001

TRUSS DESIGNATION	TOP CHORD TWO ANGLES				BOTTOM CHORD TWO ANGLES				MAIN WEB "W"					TRUSS DATA		FILLER	
	MK.	TYPE STEEL	CHORD SIZE	LENGTH	MK.	TYPE STEEL	CHORD SIZE	LENGTH	MK.	TYPE STEEL	DIA.	LENGTH	NO. OF K			NO.	DIA.
24T14 -196	6	A242	$1^1/_2$" x $1^1/_4$" x .275"	19'-6"	7	A242	2" x $1^1/_2$" x .25"	14'-8"	3	A242	.98	17'-11$^1/_4$"	$3^1/_2$K @ 3'-4" = 11'-8"			—	—

Fs	TRUSS DESIGNATION	WE	VERTICAL "ST" STRUT				DIAGONAL "T" STRUT				WEB "DS$_1$"				END STIFFENER MK. V5			END STIFFENER MK. V6			BEARING ANGLES			
	—		MK.	TYPE STEEL	DIA.	LENGTH	MK.	TYPE STEEL	DIA.	LENGTH	MK.	TYPE STEEL	DIA.	LENGTH	TYPE STEEL	DIA.	LENGTH	TYPE STEEL	DIA.	LENGTH	MK.	TYPE STEEL	CHORD SIZE	LENGTH
	24T14 -196	6'-1$^1/_4$"	2	A242	.98	1'-11$^3/_4$"	1	A242	.98	6"-2$^7/_8$"	—	—	—	—	A242	.98	$2^7/_8$"	A242	.98	1'-11$^1/_4$"	9	A242	2" x $1^1/_2$" x .25	2'-3"

EL END	TRUSS DESIGNATION	VERTICAL "ST" STRUT				WE$_V$	WEB "WT"				
		MK.	TYPE STEEL	DIA.	LENGTH		MK.	TYPE STEEL	PCS.	DIA.	LENGTH
	24T14 -196	2	A242	.98	1'-11$^3/_4$"	1'-6$^1/_4$"	4	A242	1	.98	2'-5$^1/_2$"

NO.	DATE	REVISION	BY
4	7-17-68	HOLE SIZE - SECTION B-B	T.M.C.
3	7-8-68	AS NOTED	T.M.C.
2	7-3-68	MAIN WEB, WT	T.M.C.
1	6-26-68	GENERAL	T.M.C.

FOR
WORLD TRADE CENTER - N.Y.C.
FOR
THE PORT OF NEW YORK AUTHORITY

BRIDGING TRUSS 24T14 x 19'-6" LONG

FABRICATION BY: LACLEDE STEEL COMPANY

FABRICATED AT MADISON, ILLINOIS		DESIGN DRAWING NO. 7-AB2-9	PLATE
APPROVED FOR FABRICATION BY JW FOR P.O.N.Y.A.	DATE 7/24/68	DRAWN BY: gh DATE APR. 20, 1968	
APPROVED FOR FABRICATION BY ____ FOR FABRICATOR	DATE	CHECKED BY: T.M. CHURA DATE APR. 20, 1968	IN CHARGE OF PROD. DEV.
DETAILED BY: A.C. WEBER		FABRICATION CONT. NO. W.T.C 221	SHEET NO. BT 214

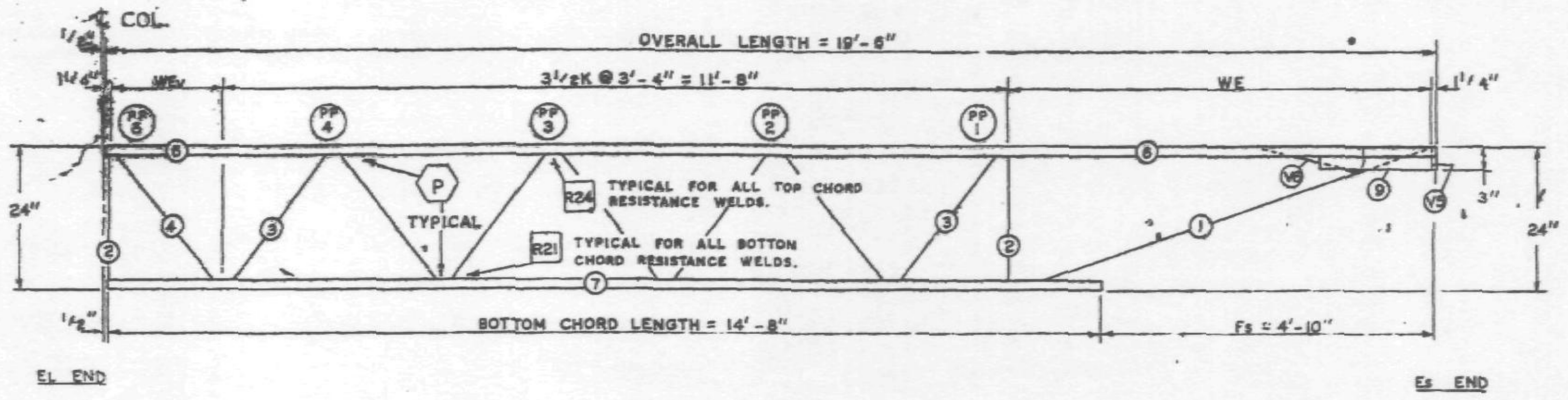

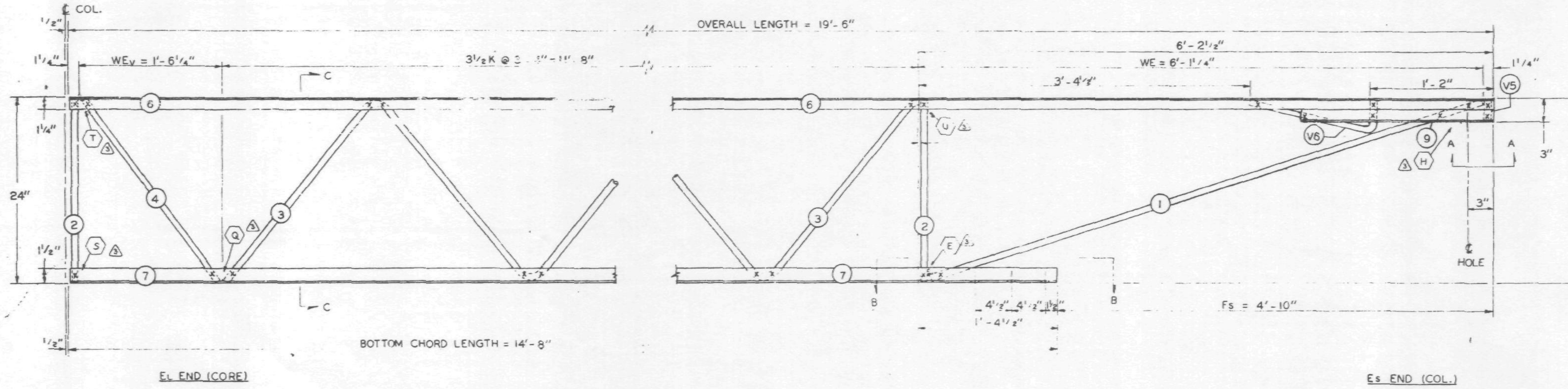

ALL PANEL POINTS RESISTANCE WELDED (x).
ARC WELDS INDICATED AT SHADED AREAS
AND AT BOTTOM CHORD WEB SPLICES (||||||).
ALL WELD DETAILS SHOWN ON SHEETS ST290
AND ST291.
LETTERS IN HEXAGON INDICATE WELD DETAIL, ie., (A).
LETTERS AND NUMBERS IN SQUARES INDICATE RESISTANCE WELD STRENGTH IDENTIFIED IN THE
QUALITY CONTROL PROGRAM, ie., [R21].
SEE SHEET ST296 FOR V5 & V6 DETAILS.

FABRICATION REQUIREMENTS

	DESIGN	TOLERANCE
CAMBER AT MIDSPAN	0"	+ 3/8"
DESIGN DEPTH	24"	+ 1/4"
PANEL "K"	3'-4"	+ 1/4"
PANEL "K1"	——	——
WEB DEPTH	23 7/8"	+ 1/4"
OVERALL LENGTH	19'-6"	+ 3/8"

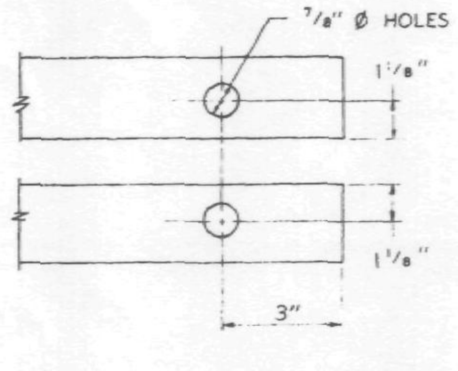

SECTION A-A

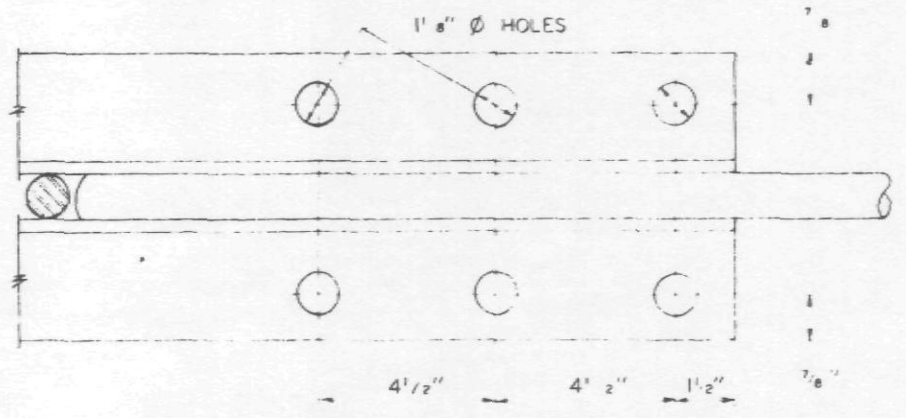

SECTION B-B

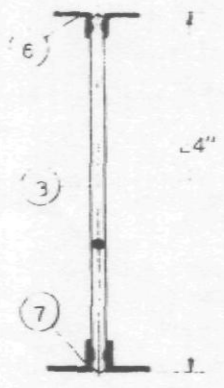

SECTION C-C

REF. DWGS.

7-AB2-1	4-1-68
7-AB2-9	4-1-68
7-AB4-15.1	1-3-68
7-AB4-16 & 19	1-3-68
7-AB4-28 & 41	1-3-68
7-AB4-18 & 38	4-1-68

PAINT
LACLEDE ELECTROCOAT
RED NO. 10001

TRUSS DESIGNATION	TOP CHORD TWO ANGLES				BOTTOM CHORD TWO ANGLES				MAIN WEB "W"					TRUSS DATA		FILLER	
	MK.	TYPE STEEL	CHORD SIZE	LENGTH	MK.	TYPE STEEL	CHORD SIZE	LENGTH	MK.	TYPE STEEL	DIA.	LENGTH	NO. OF K			NO.	DIA.
[illegible] -196	6	A242	1 1/2" x 1 1/4" x .275"	19'-6"	7	A242	2" x 1 1/2" x .25"	14'-8"	3	A242	.98	17'-11 1/4"	3 1/2K @ 3'-4" = 11'-8"			—	—

Es END	TRUSS DESIGNATION	WE	VERTICAL "ST" STRUT				DIAGONAL "T" STRUT				WEB "DS1"				END STIFFENER MK. V5			END STIFFENER MK. V6			BEARING ANGLES			
			MK.	TYPE STEEL	DIA.	LENGTH	MK.	TYPE STEEL	DIA.	LENGTH	MK.	TYPE STEEL	DIA.	LENGTH	TYPE STEEL	DIA.	LENGTH	TYPE STEEL	DIA.	LENGTH	MK.	TYPE STEEL	CHORD SIZE	LENGTH
	24T14 -196	6'-1 1/4"	2	A242	.98	1'-11 3/4"	1	A242	.98	6"-2 7/8"	—	——	—	——	A242	.98	2 7/8"	A242	.98	1'-11 1/4"	9	A242	2" x 1 1/2" x .25	2'-3"

EL END	TRUSS DESIGNATION	VERTICAL "ST" STRUT				WEV	WEB "WT"				
		MK.	TYPE STEEL	DIA.	LENGTH		MK.	TYPE STEEL	PCS.	DIA.	LENGTH
	24T14 -196	2	A242	.98	1'-11 3/4"	1'-6 1/4"	4	A242	1	.98	2'-5 1/2"

NO.	DATE	REVISION	BY
3	7-8-68	AS NOTED	T.M.C.
2	7-3-68	MAIN WEB, WT	T.M.C.
1	6-26-68	GENERAL	T.M.C.

FOR
WORLD TRADE CENTER - N.Y.C.
FOR
THE PORT OF NEW YORK AUTHORITY

BRIDGING TRUSS 24T14 x 19'-6" LONG

FABRICATION BY: LACLEDE STEEL COMPANY
FABRICATED AT MADISON, ILLINOIS
DESIGN. DRAWING NO. 7-AB2-9 PLATE
APPROVED FOR FABRICATION BY JW FOR P.O.N.Y.A DATE 7/9/68
DRAWN BY: [illegible] DATE APR. 20, 1968
APPROVED FOR FABRICATION BY FOR FABRICATOR DATE
CHECKED BY: T.M. CHURA DATE: APR. 20, 1968
IN CHARGE OF PROD. DEV.
DETAILED BY: A.C. WEBER
FABRICATION CONT. NO. W.T.C. 221
SHEET NO. BT 214

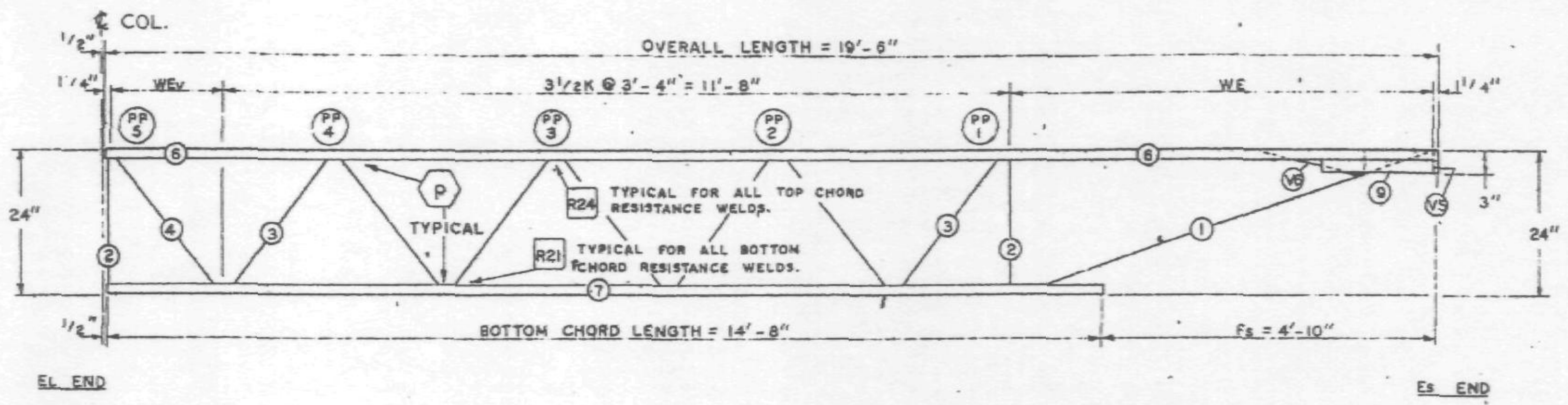

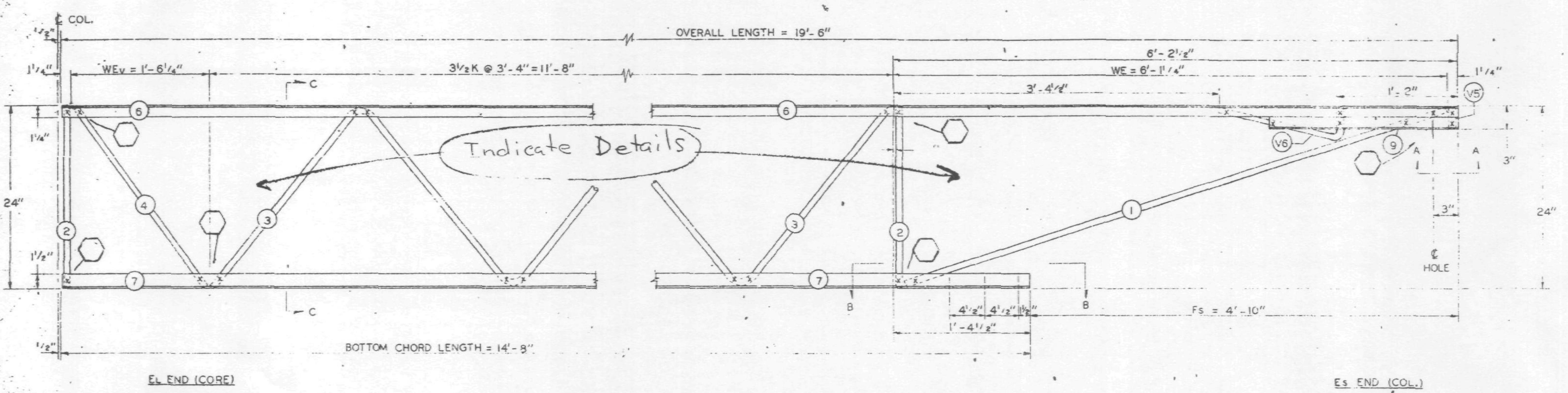

ALL PANEL POINTS RESISTANCE WELDED (x).
ARC WELDS INDICATED AT SHADED AREAS
AND AT BOTTOM CHORD WEB SPLICES (▥).
ALL WELD DETAILS SHOWN ON SHEETS ST290
AND ST291.
LETTERS IN HEXAGON INDICATE WELD DETAIL, ie., ⟨A⟩.
LETTERS AND NUMBERS IN SQUARES INDICATE RESISTANCE WELD STRENGTH IDENTIFIED IN THE
QUALITY CONTROL PROGRAM, ie., [R21].
SEE SHEET ST296 FOR V5 & V6 DETAILS.

FABRICATION REQUIREMENTS	DESIGN	TOLERANCE
CAMBER AT MIDSPAN	0"	+ 3/8"
DESIGN DEPTH	24"	+ 1/4"
PANEL "K"	3'-4"	+ 1/4"
PANEL "K1"	—	—
WEB DEPTH	23 7/8"	+ 1/4"
OVERALL LENGTH	19'-6"	+ 3/8"

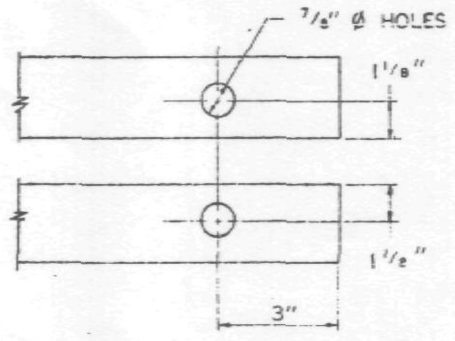

SECTION A-A

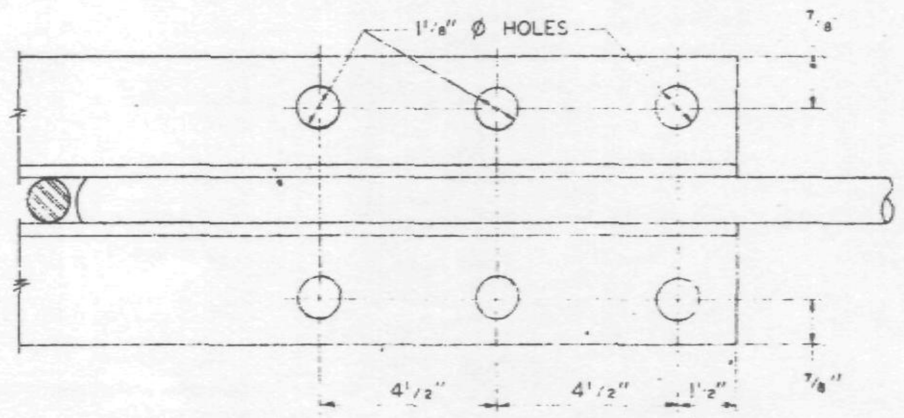

SECTION B-B

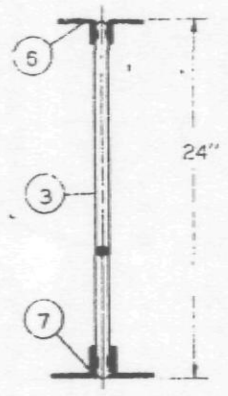

SECTION C-C

REF. DWGS.

7-A82-1	4-1-68
7-A82-9	4-1-68
7-A84-15.1	1-3-68
7-A84-16 & 19	1-3-68
7-A84-28 & 41	1-3-68
7-A84-18 & 38	4-1-68

PAINT
LACLEDE ELECTROCOAT
RED NO. 10001

TRUSS DESIGNATION	TOP CHORD TWO ANGLES				BOTTOM CHORD TWO ANGLES				MAIN WEB "W"					TRUSS DATA		FILLER	
	MK.	TYPE STEEL	CHORD SIZE	LENGTH	MK.	TYPE STEEL	CHORD SIZE	LENGTH	MK.	TYPE STEEL	DIA.	LENGTH	NO. OF K			NO.	DIA.
24T14 -196	6	A242	1½" x 1¼" x .275"	19'-6"	7	A242	2" x 1½" x .25"	14'-8"	3	A242	.98	17'-10 13/16"	3½K @ 3'-4" = 11'-8"			—	—

Es END	TRUSS DESIGNATION	WE	VERTICAL "ST" STRUT				DIAGONAL "T" STRUT				WEB "DS1"				END STIFFENER MK V5			END STIFFENER MK. V6			BEARING ANGLES			
			MK.	TYPE STEEL	DIA.	LENGTH	MK.	TYPE STEEL	DIA.	LENGTH	MK.	TYPE STEEL	DIA.	LENGTH	TYPE STEEL	DIA.	LENGTH	TYPE STEEL	DIA.	LENGTH	MK.	TYPE STEEL	CHORD SIZE	LENGTH
	24T14 -196	6'-1¼"	2	A242	.98	1'-11¾"	1	A242	.98	6"-2⅞"	—	—	—	—	A242	.98	2⅞"	A242	.98	1'-11¼"	9	A242	2" x 1½" x .25	2'-3"

EL END	TRUSS DESIGNATION	VERTICAL "ST" STRUT				WEv	WEB "WT"				
		MK.	TYPE STEEL	DIA.	LENGTH		MK.	TYPE STEEL	PCS.	DIA.	LENGTH
	24T14 -196	2	A242	.98	1'-11¾"	1'-6¼"	4	A242	1	.98	2'-5"

SKILLING HELLE CHRISTIANSEN ROBERTSON
Structural & Civil Engineers
APPROVED
X APPROVED AS NOTED
RESUBMIT
REJECTED
7/5/68 SK

NO.	DATE	REVISION	BY
1	6-26-68	GENERAL	T.M.C.

FOR
WORLD TRADE CENTER - N.Y.C.
FOR
THE PORT OF NEW YORK AUTHORITY

BRIDGING TRUSS 24T14 x 19'-6" LONG

FABRICATION BY LACLEDE STEEL COMPANY

FABRICATED AT MADISON, ILLINOIS		DESIGN DRAWING NO. 7-A82-9	PLATE
APPROVED FOR FABRICATION BY ____ FOR P.O.N.Y.A.	DATE	DRAWN BY: ___ DATE APR. 20, 1968	
APPROVED FOR FABRICATION BY ____ FOR FABRICATOR	DATE	CHECKED BY: T.M. CHURA DATE APR. 20, 1968	IN CHARGE OF PROD. DEV.
DETAILED BY A.C. WEBER		FABRICATION CONT. NO. WTC 221	SHEET NO. BT 214

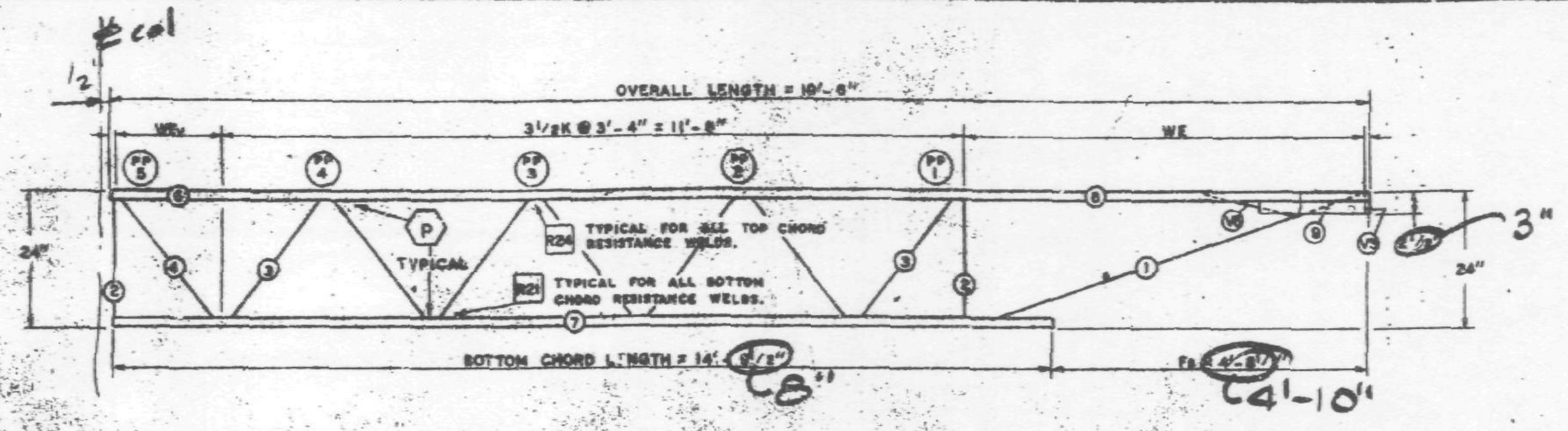

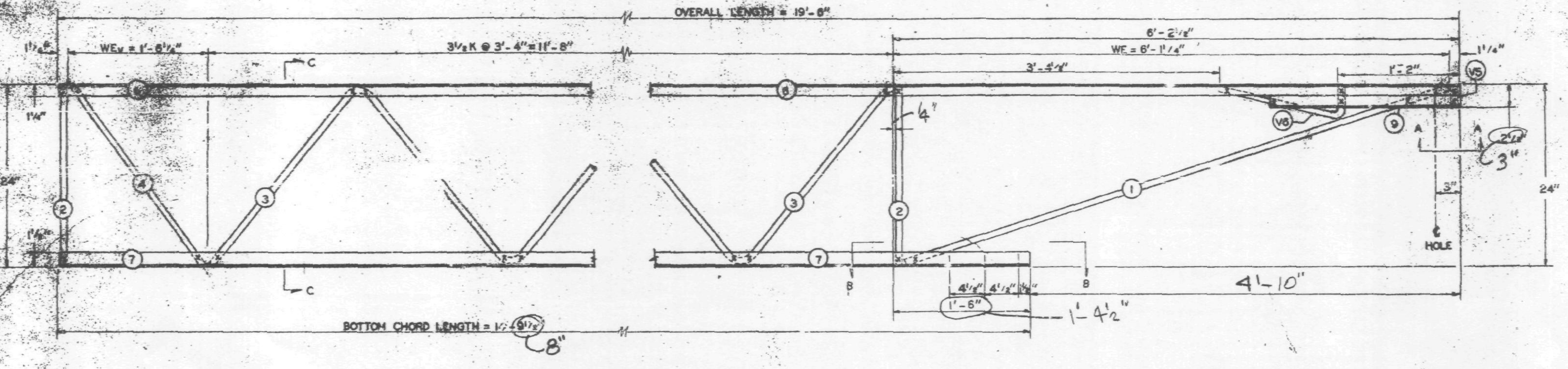

FABRICATION REQUIREMENTS		
	DESIGN	TOLERANCE
CAMBER AT MIDSPAN	0"	+ 3/8"
DESIGN DEPTH	24"	+ 1/4"
PANEL "K"	3'-4"	+ 1/4"
PANEL "K1"	——	——
WEB DEPTH	23 7/8"	+ 1/4"
OVERALL LENGTH	19'-6"	+ 3/8"

ALL PANEL POINTS RESISTANCE WELDED (x).
ARC WELDS INDICATED AT SHADED AREAS AND AT BOTTOM CHORD WEB SPLICES.
ALL WELD DETAILS SHOWN ON SHEETS ST290 AND ST291.
LETTERS IN HEXAGON INDICATE WELD DETAIL, ie., (A).
LETTERS AND NUMBERS IN SQUARES INDICATE RESISTANCE WELD STRENGTH IDENTIFIED IN THE QUALITY CONTROL PROGRAM, ie., R21.
SEE SHEET ST296 FOR V5 & V6 DETAILS.

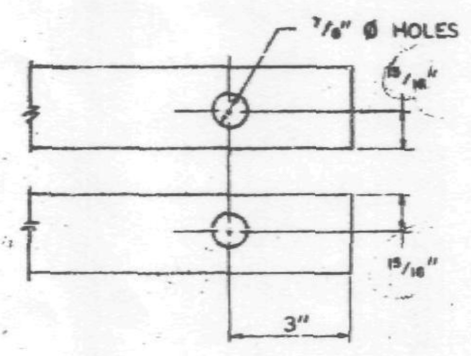

SECTION A-A

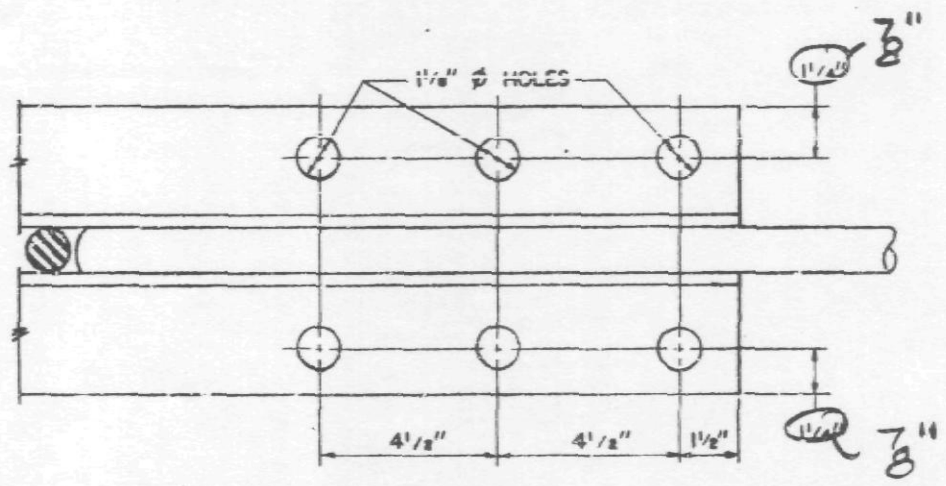

SECTION B-B

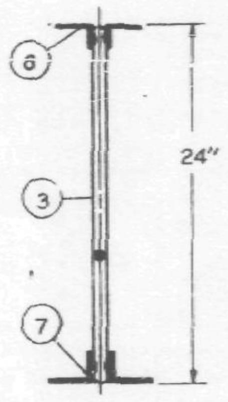

SECTION C-C

SKILLING-HELLE CHRISTIANSEN-ROBERTSON
APPROVED AS NOTED
5/31/68

TISHMAN
MAY 23 1968
CONSTRUCTION DEPT.

REF. DWGS.

7-AB2-1	4-1-68
7-AB2-9	4-1-68
7-AB4-15,1	10-27-68
7-AB4-18&19	1-3-68
7-AB4-29&41	1-3-68
7-AB4-18&38	4-1-68

PAINT
LACLEDE ELECTROCOAT
RED NO. 10001

TRUSS DESIGNATION	TOP CHORD TWO ANGLES				BOTTOM CHORD TWO ANGLES				MAIN WEB "W"					TRUSS DATA		FILLER	
	MK.	TYPE STEEL	CHORD SIZE	LENGTH	MK.	TYPE STEEL	CHORD SIZE	LENGTH	MK.	TYPE STEEL	DIA.	LENGTH	NO. OF K			NO.	DIA.
24T14 -196	6	A242	1½" x 1¼" x .275"	19'-6"	7	A242	2" x 1½" x .25"	14'-9½" (8")	3	A242	.98	17'-10⅞"	3½K @ 3'-4" = 11'-8"			—	—

E.E.	TRUSS DESIGNATION	WE	VERTICAL "ST" STRUT				DIAGONAL "T" STRUT				WEB "DS1"				END STIFFENER						BEARING ANGLES			
															MK. V5			MK. V6						
			MK.	TYPE STEEL	DIA.	LENGTH	MK.	TYPE STEEL	DIA.	LENGTH	MK.	TYPE STEEL	DIA.	LENGTH	TYPE STEEL	DIA.	LENGTH	TYPE STEEL	DIA.	LENGTH	MK.	TYPE STEEL	CHORD SIZE	LENGTH
	24T14 -196	6'-1¼"	2	A242	.98	1'-11¾"	1	A242	.98	6"-2⅞"	—	——	—	——	A242	.98	2⅞"	A242	.98	1'-11¼"	9	A242	1½" x 1¼" x .275	2'-3"

E.E. END	TRUSS DESIGNATION	VERTICAL "ST" STRUT				WEv	WEB "WT"				
		MK.	TYPE STEEL	DIA.	LENGTH		MK.	TYPE STEEL	PCS.	DIA.	LENGTH
	24T14 -196	2	A242	.98	1'-11¾"	1'-6¼"	4	A242	1	.98	2'-5"

FOR
WORLD TRADE CENTER - N.Y.C.
FOR
THE PORT OF NEW YORK AUTHORITY

BRIDGING TRUSS 24T14 x 19'-6" LONG

FABRICATION BY: LACLEDE STEEL COMPANY

FABRICATED AT: MADISON, ILLINOIS		DESIGN DRAWING NO. 7-AB2-9	PLATE -
APPROVED FOR FABRICATION BY ____ FOR P.O.N.Y.A.	DATE	DRAWN BY DATE APR. 30, 1968	
APPROVED FOR FABRICATION BY LACLEDE STEEL CO.	DATE	CHECKED BY T.M. CHURA DATE APR. 30, 1968	IN CHARGE OF PROD. DEV.
DETAILED BY: A.C. WEBER		FABRICATION CONT. NO. W.T.C. 221	SHEET NO. BT 214

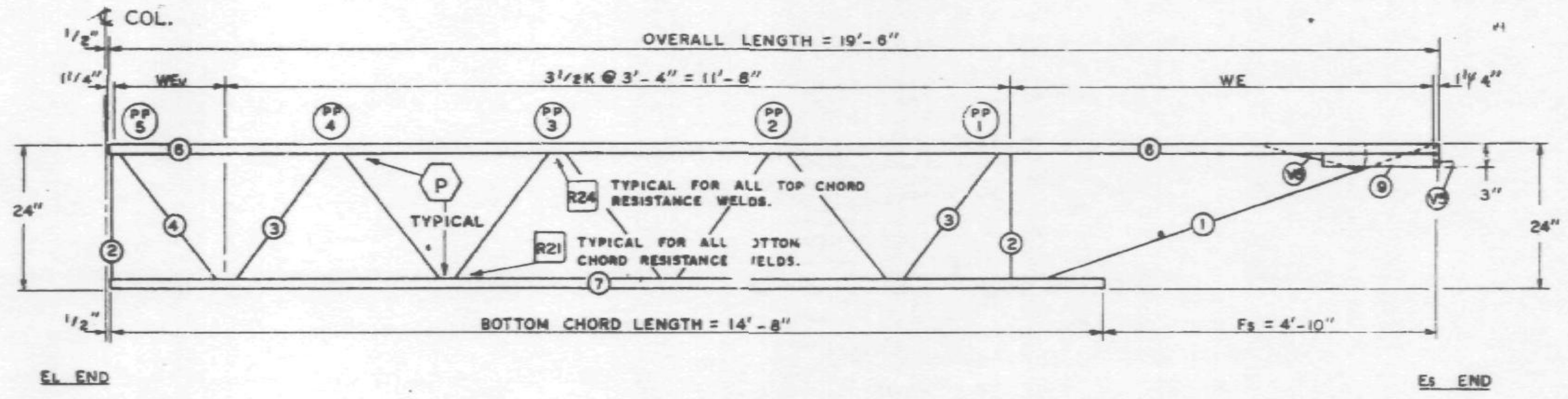

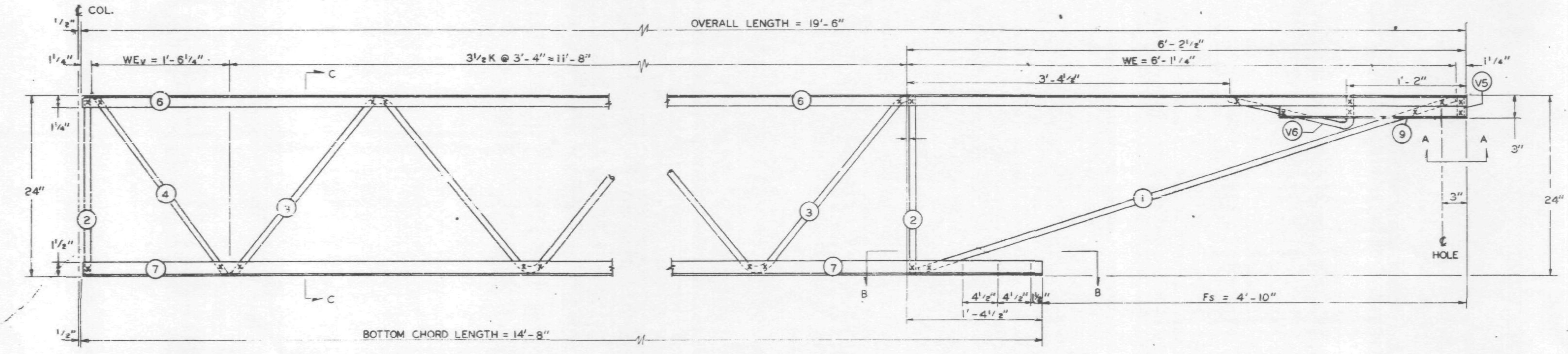

EL END (CORE)

Es END (COL.)

FABRICATION REQUIREMENTS	DESIGN	TOLERANCE
CAMBER AT MIDSPAN	0"	+ 3/8"
DESIGN DEPTH	24"	+ 1/4"
PANEL "K"	3'-4"	+ 1/4"
PANEL "K1"	——	——
WEB DEPTH	23 7/8"	+ 1/4"
OVERALL LENGTH	19'-6"	+ 3/8"

ALL PANEL POINTS RESISTANCE WELDED (x).
ARC WELDS INDICATED AT SHADED AREAS
AND AT BOTTOM CHORD WEB SPLICES (IIIIIII).
ALL WELD DETAILS SHOWN ON SHEETS ST290
AND ST291.
LETTERS IN HEXAGON INDICATE WELD DETAIL, ie., ⟨A⟩.
LETTERS AND NUMBERS IN SQUARES INDICATE RE-
SISTANCE WELD STRENGTH IDENTIFIED IN THE
QUALITY CONTROL PROGRAM, ie., R21.
SEE SHEET ST296 FOR V5 & V6 DETAILS.

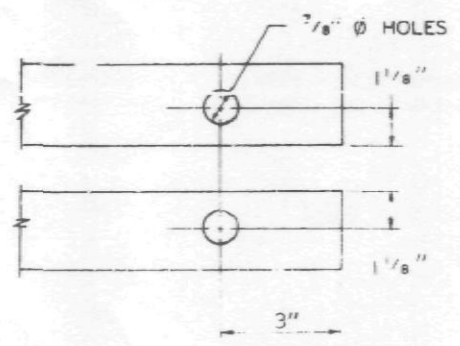

SECTION A-A

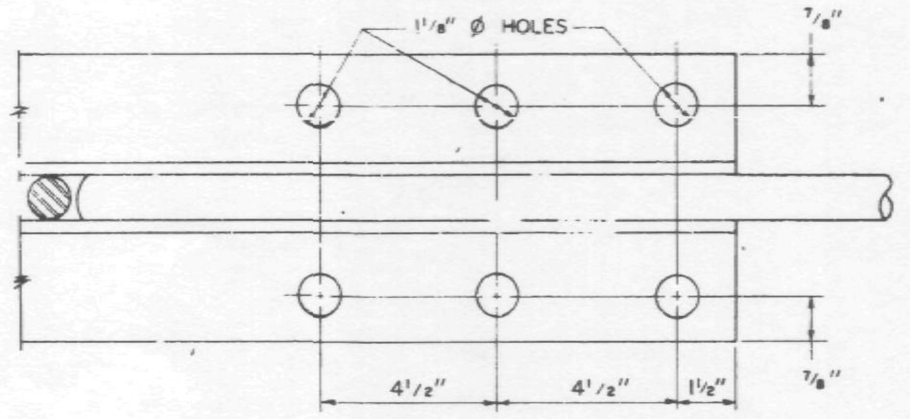

SECTION B-B

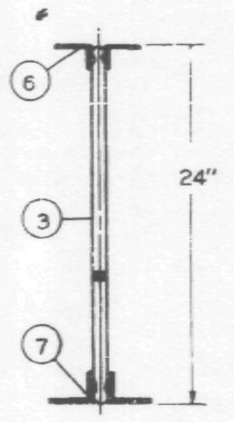

SECTION C-C

REF. DWGS.

7-AB2-1	4-1-68
7-AB2-9	4-1-68
7-AB4-15,1	1-3-68
7-AB4-16 & 19	1-3-68
7-AB4-28 & 41	1-3-68
7-AB--18 & 38	4-1-68

PAINT
LACLEDE ELECTROCOAT
RED NO. 10001

TRUSS DESIGNATION	TOP CHORD TWO ANGLES				BOTTOM CHORD TWO ANGLES				MAIN WEB "W"					TRUSS DATA		FILLER	
	MK.	TYPE STEEL	CHORD SIZE	LENGTH	MK.	TYPE STEEL	CHORD SIZE	LENGTH	MK.	TYPE STEEL	DIA.	LENGTH	NO. OF K			NO.	DIA.
24T14 -196	6	A242	1½" x 1¼" x .275"	19'-6"	7	A242	2" x 1½" x .25"	14'-8"	3	A242	.98	17'-11¼"	3½K @ 3'-4" = 11'-8"			—	—

Es END	TRUSS DESIGNATION	WE	VERTICAL "ST" STRUT				DIAGONAL "T" STRUT				WEB "DS1"				END STIFFENER MK. V5			END STIFFENER MK. V6			BEARING ANGLES			
			MK.	TYPE STEEL	DIA.	LENGTH	MK.	TYPE STEEL	DIA.	LENGTH	MK.	TYPE STEEL	DIA.	LENGTH	TYPE STEEL	DIA.	LENGTH	TYPE STEEL	DIA.	LENGTH	MK.	TYPE STEEL	CHORD SIZE	LENGTH
	24T14 -196	6'-1¼"	2	A242	.98	1'-11¾"	1	A242	.98	6"-2⅞"	—	——	—	——	A242	.98	2⅞	A242	.98	1'-11¼"	9	A242	2" x 1½" x .25	2'-3"

EL END	TRUSS DESIGNATION	VERTICAL "ST" STRUT				WEv	WEB "WT"				
		MK.	TYPE STEEL	DIA.	LENGTH		MK.	TYPE STEEL	PCS.	DIA.	LENGTH
	24T14 -196	2	A242	.98	1'-11¾"	1'-6¼"	4	A242	1	.98	2'-5½"

NO.	DATE	REVISION	BY
2	7-3-68	MAIN WEB, WT	T.M.C.
1	6-26-68	GENERAL	T.M.C.

FOR
WORLD TRADE CENTER - N.Y.C.
FOR
THE PORT OF NEW YORK AUTHORITY

BRIDGING TRUSS 24T14 x 19'-6" LONG

FABRICATION BY: LACLEDE STEEL COMPANY

FABRICATED AT MADISON, ILLINOIS

DESIGN DRAWING NO. 7-AB2-9 PLATE

APPROVED FOR FABRICATION BY ______ FOR P.O.N.Y.A. DATE

DRAWN BY: ____ DATE APR. 20, 1968

APPROVED FOR FABRICATION BY ______ FOR FABRICATOR DATE

CHECKED BY: T.M. CHURA DATE APR. 20, 1968

IN CHARGE OF PROD. DEV.

DETAILED BY: A.C. WEBER

FABRICATION CONT. NO. W.T.C. 221

SHEET NO. BT 214

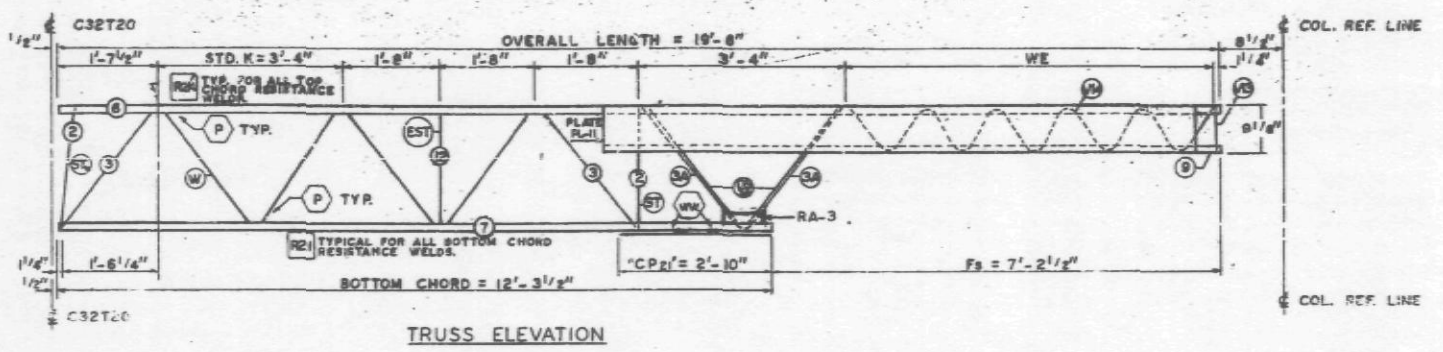

TRUSS ELEVATION

FABRICATION REQUIREMENTS	DESIGN	TOLERANCE
CAMBER AT MIDSPAN	0"	+ 3/8"
DESIGN DEPTH	24"	± 1/4"
PANEL "K"	3'-4"	± 1/4"
OVERALL LENGTH	19'-6"	± 3/8"
WEB DEPTH	23 7/8"	± 1/4"

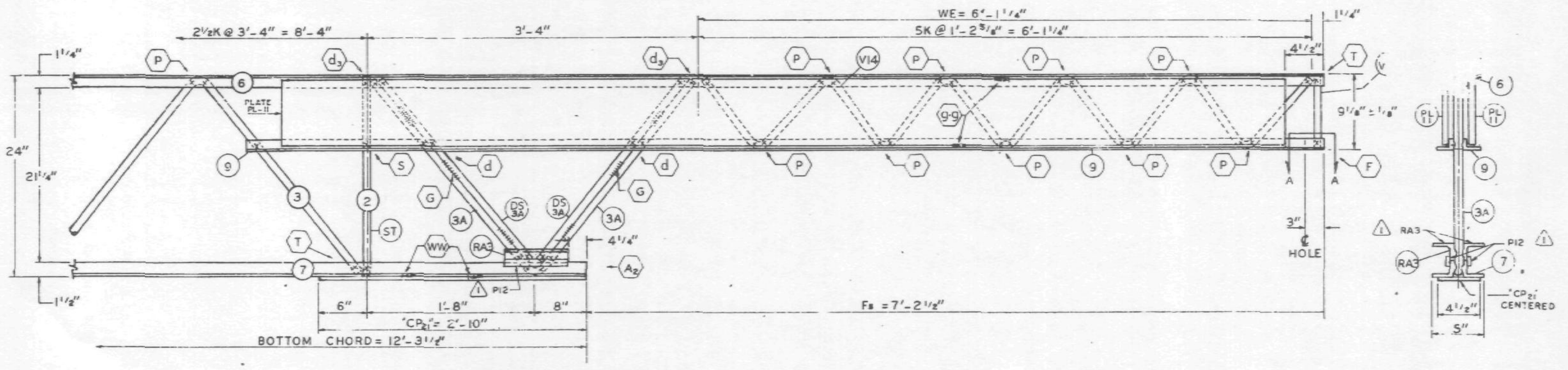

Es END (COLUMN)

ALL PANEL POINTS RESISTANCE WELDED. (X).
ARC WELDS INDICATED AT SHADED AREAS AND AT BOTTOM CHORD WEB SPLICES.
LETTERS AND NUMBERS IN SQUARES INDICATE RESISTANCE WELD STRENGTH IDENTIFIED IN THE QUALITY CONTROL PROGRAM. ie., R21.
LETTERS IN HEXAGONS INDICATE WELD DETAILS. ie., (P).
ALL WELD DETAILS SHOWN ON SHEETS ST 290, ST 291, ST 293 & ST 294.
STIFFENER PL SHOWN ON SHEET ST 408.
CHORD PLATE DETAILS SHOWN ON SHEET ST 283 & ST 284.

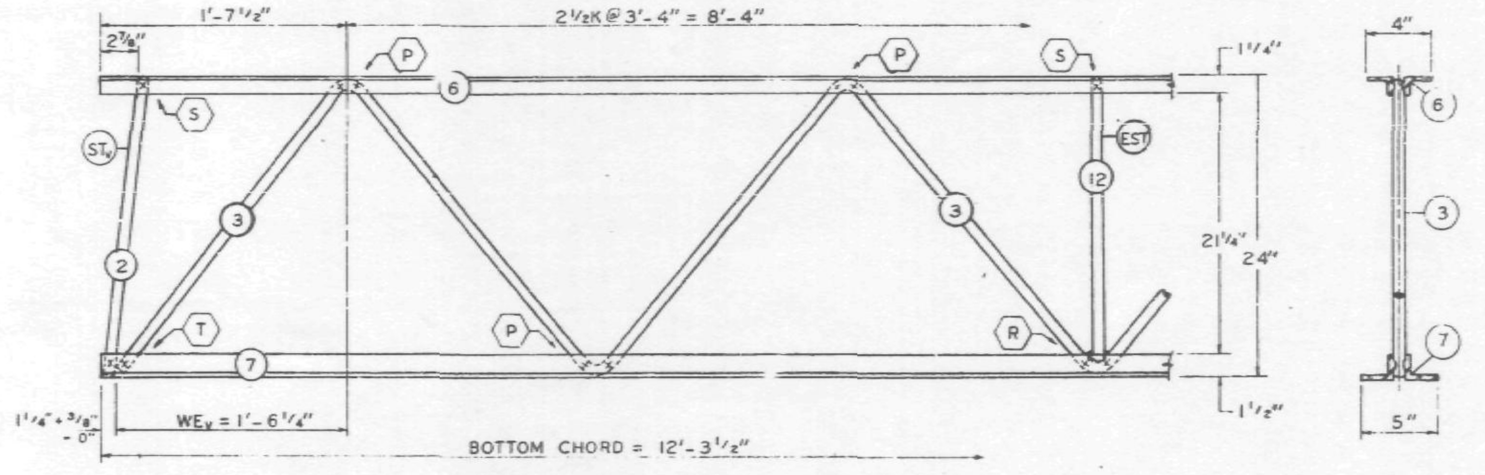

EL END (CORE)

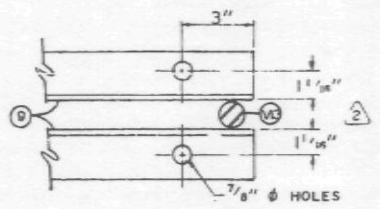

SECTION A-A

REF. DRWG.

7-AB2-14	10-4-68
7-AB1-55	10-15-68
7-AB4-54	10-4-68
7-AB4-58	10-4-68
5A-124	10-11-68

PAINT
LACLEDE ELECTROCOAT
RED NO. 10001

TRUSS DESIGNATION	TOP CHORD TWO ANGLES				BOTTOM CHORD TWO ANGLES				MAIN WEB "W"					VERTICAL "EST" STRUT					TRUSS DATA		REINFORCING ANGLES (1)					SPECIAL PLATES (1)				
	MK.	TYPE STEEL	CHORD SIZE	LENGTH	MK.	TYPE STEEL	CHORD SIZE	LENGTH	MK.	TYPE STEEL	DIA.	LENGTH	NO. OF K	MK.	TYPE STEEL	DIA.	PCS.	LENGTH			MK.	PCS.	TYPE STEEL	ANGLE SIZE	LENGTH	MK.	PCS.	TYPE STEEL	SIZE	LENGTH
24T14A - 196	6	A242	1 1/2"x1 1/4"x.275"	19'-6"	7	A242	2"x1 1/2"x.25"	12'-3 1/2"	3 / 3A	A242 / A242	.98 / .98	15'-1 1/2" / 5'-1 1/2"	3K@3'-4"=10'-0" / K@3'-4"=3'-4"	12	A242	.98	1	1'-10 7/8"			RA3	2	A242	2"x1 1/2"x.25"	7 1/2"	P12	2	A36	1"x 3/8"	7 1/2"

Es END TRUSS DESIGNATION	VERTICAL "ST" STRUT				BEARING ANGLES				WE	DOUBLE STRUT				CHORD PLATE				END STIFFENER MK. V13			END STIFFENER MK. V14			STIFFENER PLATE					
	MK.	TYPE STEEL	DIA.	LENGTH	MK.	TYPE STEEL	CHORD SIZE (2)	LENGTH		MK.	TYPE STEEL	DIA.	LENGTH (2 REQ'D)	MK.	TYPE STEEL	SIZE	LENGTH	TYPE STEEL	DIA.	LENGTH	TYPE STEEL	DIA.	LENGTH	MK.	TYPE STEEL	PLATE SIZE	LENGTH	PCS.
24T14A - 196	2	A242	98	1'-11 3/4"	9	A242	2"x1 1/2"x.25"	10'-9 1/2"	6'-1 1/4"	DS 3A	A242	.98	2'-3 3/4"	CP	A36	4"x.30	2'-10"	A242	.98	9"	A242	.98	9'-3"	PL 11	A36	8"x.75"	10'-0"	2

EL END TRUSS DESIGNATION	INCLINED "ST$_{V}$" STRUT				WE$_{V}$
	MK.	TYPE STEEL	DIA.	LENGTH	
24T14A - 196	2	A242	.98	1'-11 3/4"	1'-6 1/4"

NO.	DATE	REVISION	BY
(2)	3-18-69	AS NOTED	G.D.C.
(1)	12-26-68	AS NOTED	G.D.C.

BRIDGING TRUSS DETAILS
FOR
WORLD TRADE CENTER - N.Y.C.
FOR
THE PORT OF NEW YORK AUTHORITY

BRIDGING TRUSS 24T14A x 19'-6" LONG
WORLD TRADE CENTER TOWERS A & B

FABRICATION BY LACLEDE STEEL COMPANY
FABRICATED AT MADISON, ILLINOIS
DESIGN DRAWING NO.
PLATE
APPROVED FOR FABRICATION BY James White FOR P.O.N.Y.A. DATE 3/24/69
DRAWN BY: gdc DATE OCT. 31, 1968
APPROVED FOR FABRICATION BY: FOR FABRICATOR DATE
CHECKED BY: T.M. CHURA DATE OCT. 31, 1968
IN CHARGE OF PROD. DEV.
LACLEDE STEEL CO.
DETAILED BY: A. CARL WEBER
FABRICATION CONT. NO. W.T.C. 221
SHEET NO. BT 214 A

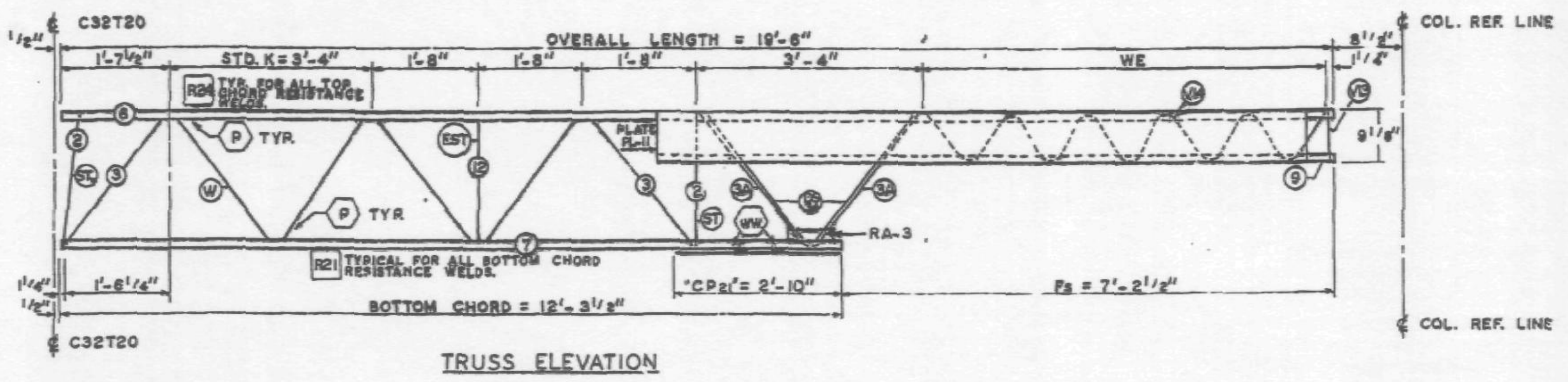

TRUSS ELEVATION

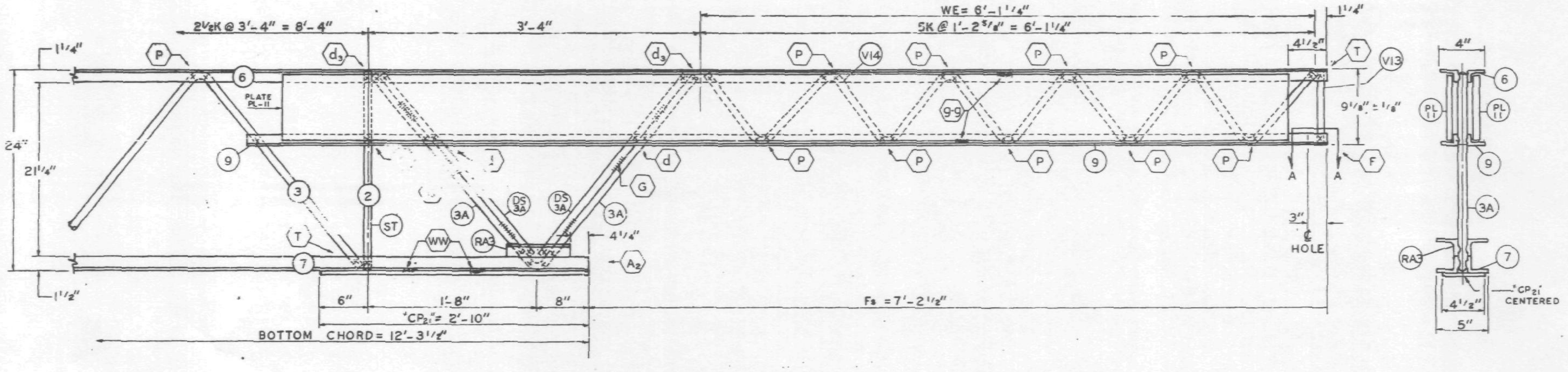

Es END (COLUMN)

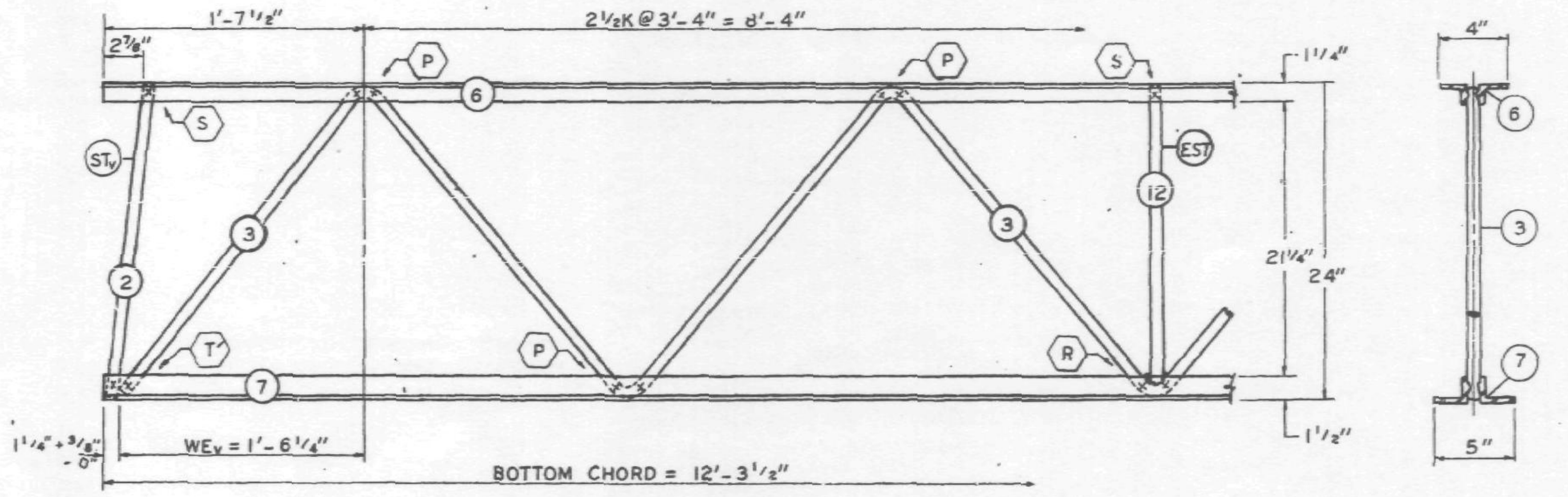

EL END (CORE)

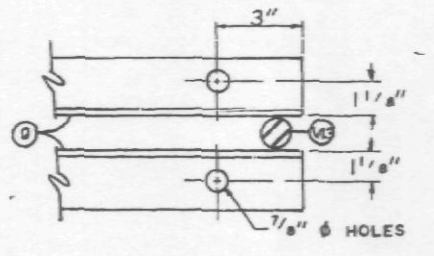

SECTION A-A

FABRICATION REQUIREMENTS	DESIGN	TOLERANCE
CAMBER AT MIDSPAN	0"	+ 3/8"
DESIGN DEPTH	24"	± 1/4"
PANEL "K"	3'-4"	± 1/4"
OVERALL LENGTH	19'-6"	± 3/8"
WEB DEPTH	23 7/8"	± 1/4"

ALL PANEL POINTS RESISTANCE WELDED. (X).
ARC WELDS INDICATED AT SHADED AREAS AND AT BOTTOM CHORD WEB SPLICES. (IIIIIII).
LETTERS AND NUMBERS IN SQUARES INDICATE RESISTANCE WELD STRENGTH IDENTIFIED IN THE QUALITY CONTROL PROGRAM. ie., R21.
LETTERS IN HEXAGONS INDICATE WELD DETAILS. ie., ⟨P⟩.
ALL WELD DETAILS SHOWN ON SHEETS ST 290, ST 291, ST 293 & ST 294.
STIFFENER PL SHOWN ON SHEET ST 408.
CHORD PLATE DETAILS SHOWN ON SHEET ST 283 & ST 284.

REF. DRWG.		
	7-AB2-14	10-4-68
	7-AB1-55	10-15-68
	7-AD4-54	10-4-68
	7-AB4-56	10-4-68
	SA-124	10-11-68

PAINT
LACLEDE ELECTROCOAT
RED NO. 10001

TRUSS DESIGNATION	TOP CHORD TWO ANGLES				BOTTOM CHORD TWO ANGLES				MAIN WEB "W"					VERTICAL "EST" STRUT					TRUSS DATA	
	MK.	TYPE STEEL	CHORD SIZE	LENGTH	MK.	TYPE STEEL	CHORD SIZE	LENGTH	MK.	TYPE STEEL	DIA.	LENGTH	NO. OF K	MK.	TYPE STEEL	DIA.	PCS.	LENGTH		
24T14A - 196	6	A242	1 1/2"x1 1/4"x.275"	19'-6"	7	A242	2"x1 1/2"x.25"	12'-3 1/2"	3 3A	A242 A242	.98 .98	15'-1 1/2" 5'-1 1/2"	3K@3'-4"=10'-0" 1K@3'-4"=3'-4"	12	A242	.98	1	1'-10 7/8"		

Es END TRUSS DESIGNATION	VERTICAL "ST" STRUT				BEARING ANGLES				WE	DOUBLE STRUT				CHORD PLATE			
	MK.	TYPE STEEL	DIA.	LENGTH	MK.	TYPE STEEL	CHORD SIZE	LENGTH		MK.	TYPE STEEL	DIA.	LENGTH (2 REQ'D)	MK.	TYPE STEEL	SIZE	LENGTH
24T14A - 196	2	A242	.98	1'-11 3/4"	9	A242	1 1/2"x1 1/4"x.275"	10'-9 1/2"	6'-1 1/4"	DS 3A	A242	.98	2'-3 3/4"	CP 21	A36	4 1/2"x.30	2'-10"

Es END TRUSS DESIGNATION	END STIFFENER MK. V13			END STIFFENER MK. V14			STIFFENER PLATE					REINFORCING ANGLES				
	TYPE STEEL	DIA.	LENGTH	TYPE STEEL	DIA.	LENGTH	MK.	TYPE STEEL	PLATE SIZE	LENGTH	PCS.	MK.	PCS.	TYPE STEEL	SIZE	LENGTH
24T14A - 196	A242	.98	9"	A242	.98	9'-3"	PL 11	A36	8"x.75"	10'-0"	2	RA3	2	A242	2"x1 1/2"x.25"	7 1/2"

EL END TRUSS DESIGNATION	INCLINED "STV" STRUT				WEV
	MK.	TYPE STEEL	DIA.	LENGTH	
24T14A - 196	2	A242	.98	1'-11 3/4"	1'-6 1/4"

BRIDGING TRUSS DETAILS
FOR
WORLD TRADE CENTER - N.Y.C.
FOR
THE PORT OF NEW YORK AUTHORITY

BRIDGING TRUSS 24T14A x 19'-6" LONG
WORLD TRADE CENTER TOWERS A & B

FABRICATION BY: LACLEDE STEEL COMPANY			
FABRICATED AT MADISON, ILLINOIS		DESIGN DRAWING NO.	PLATE
APPROVED FOR FABRICATION BY: James White FOR P.O.N.Y.A.	DATE 11/15/68	DRAWN BY: a.c.w. DATE OCT. 31, 1968	
APPROVED FOR FABRICATION BY: FOR FABRICATOR	DATE	CHECKED BY: T.M. CHURA DATE OCT. 31, 1968	IN CHARGE OF PROD. DEV.
LACLEDE STEEL CO. DETAILED BY: A. CARL WEBER		FABRICATION CONT. NO. W.T.C. 221	SHEET NO. BT 214 A

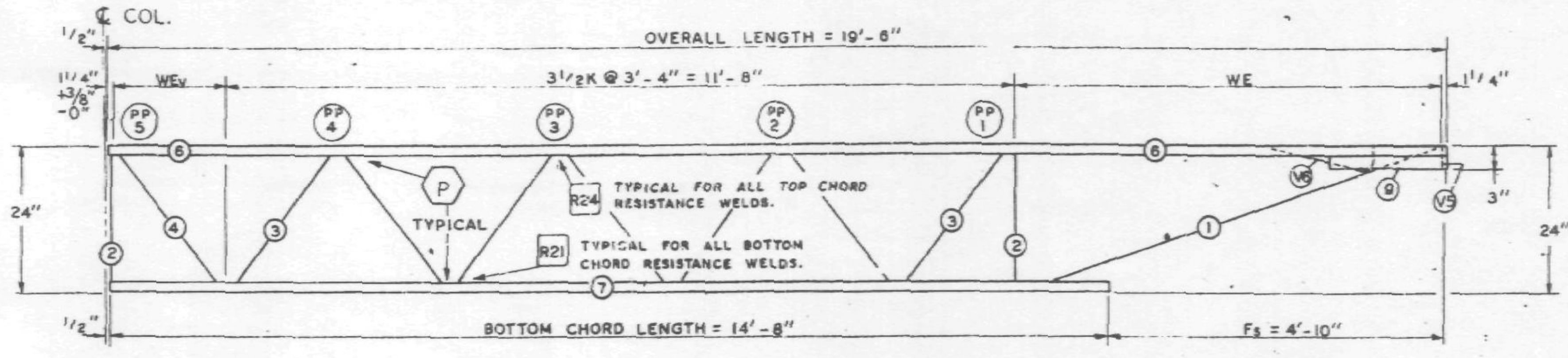

EL END

Es END

FABRICATION REQUIREMENTS		
	DESIGN	TOLERANCE
CAMBER AT MIDSPAN	0"	+ 3/8"
DESIGN DEPTH	24"	+ 1/4"
PANEL "K"	3'-4"	+ 1/4"
PANEL "K1"	——	——
WEB DEPTH	23 7/8"	+ 1/4"
OVERALL LENGTH	19' - 6"	+ 3/8"

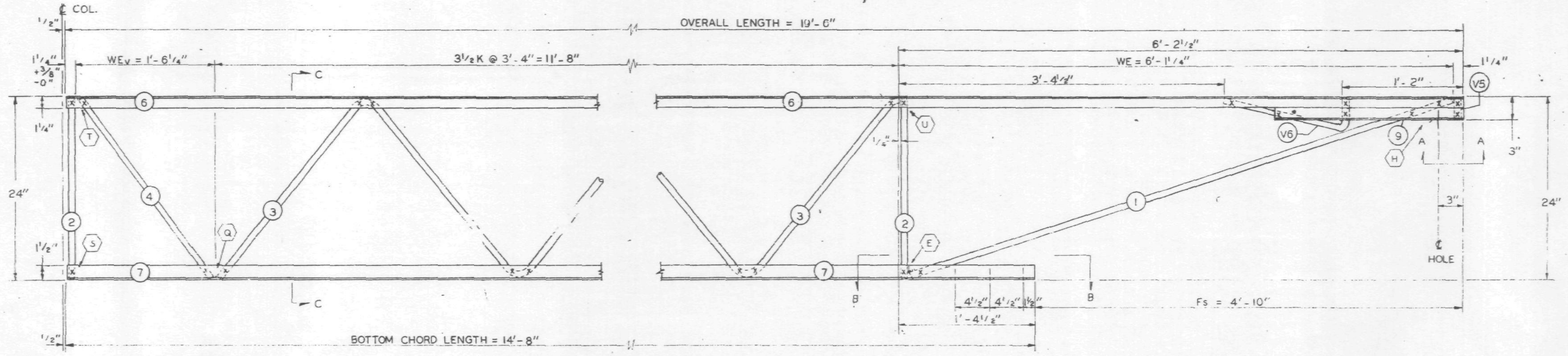

EL END (CORE)

Es END (COL.)

ALL PANEL POINTS RESISTANCE WELDED (x).
ARC WELDS INDICATED AT SHADED AREAS AND AT BOTTOM CHORD WEB SPLICES.
ALL WELD DETAILS SHOWN ON SHEETS ST290 AND ST291.
LETTERS IN HEXAGON INDICATE WELD DETAIL, i.e., (A).
LETTERS AND NUMBERS IN SQUARES INDICATE RESISTANCE WELD STRENGTH IDENTIFIED IN THE QUALITY CONTROL PROGRAM, i.e., [R21].
SEE SHEET ST296 FOR V5 & V6 DETAILS.

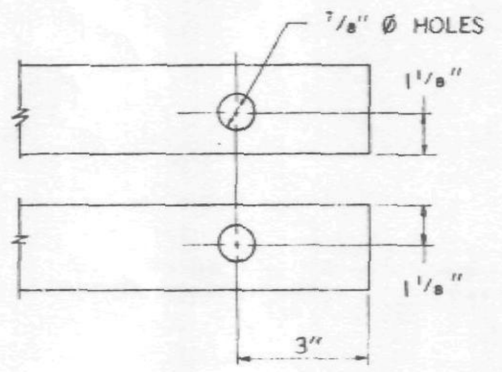

SECTION A-A

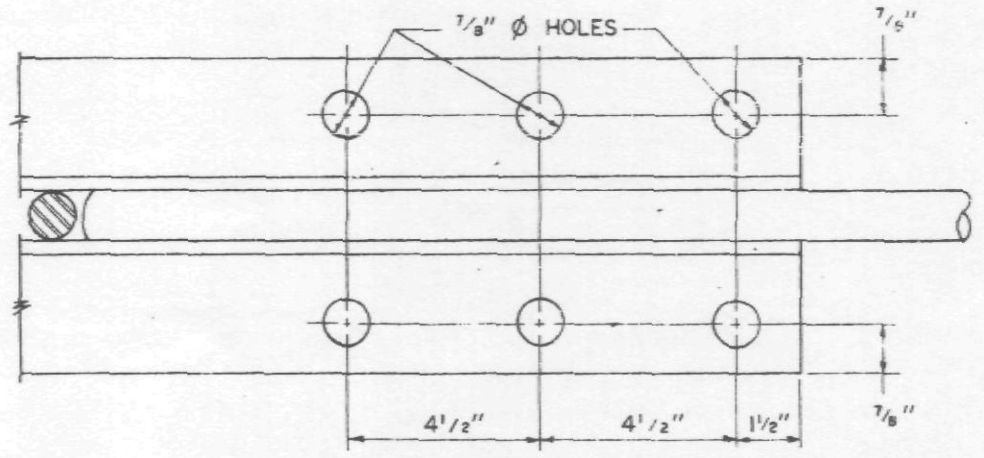

SECTION B-B

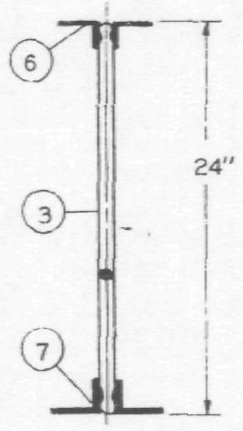

SECTION C-C

REF. DWGS.

7-AB2-1	1-6-69
7-AB2-9	1-6-69
7-AB4-15.1	10-4-68
7-AB4-18	7-22-68
7-AB4-28	7-22-68
7-A64-18	1-6-69

PAINT
LACLEDE ELECTROCOAT
RED NO. 10001

TRUSS DESIGNATION	TOP CHORD TWO ANGLES				BOTTOM CHORD TWO ANGLES				MAIN WEB "W"					TRUSS DATA		FILLER	
	MK.	TYPE STEEL	CHORD SIZE	LENGTH	MK.	TYPE STEEL	CHORD SIZE	LENGTH	MK.	TYPE STEEL	DIA.	LENGTH	NO. OF K			NO.	DIA.
24T14B-196	6	A242	1 1/2" x 1 1/4" x .275"	19'-6"	7	A242	2" x 1 1/2" x .25"	14'-8"	3	A242	.98	17'-11 1/4"	3 1/2 K @ 3'-4" = 11'-8"			—	—

Es END	TRUSS DESIGNATION	WE	VERTICAL "ST" STRUT				DIAGONAL "T" STRUT				WEB "DS1"				END STIFFENER MK. V5			END STIFFENER MK. V6			BEARING ANGLES			
			MK.	TYPE STEEL	DIA.	LENGTH	MK.	TYPE STEEL	DIA.	LENGTH	MK.	TYPE STEEL	DIA.	LENGTH	TYPE STEEL	DIA.	LENGTH	TYPE STEEL	DIA.	LENGTH	MK.	TYPE STEEL	CHORD SIZE	LENGTH
	24T14B-196	6'-1 1/4"	2	A242	.98	1'-11 3/4"	1	A242	.98	6"-2 7/8"	—	——	—	——	A242	.98	2 7/8"	A242	.98	1'-11 1/4"	9	A242	2" x 1 1/2" x .25	2'-3"

EL END	TRUSS DESIGNATION	VERTICAL "ST" STRUT				WEv	WEB "WT"				
		MK.	TYPE STEEL	DIA.	LENGTH		MK.	TYPE STEEL	PCS.	DIA.	LENGTH
	24T14B-196	2	A242	.98	1'-11 3/4"	1'-6 1/4"	4	A242	1	.98	2'-5 1/2"

NO.	DATE	REVISION	BY

FOR
WORLD TRADE CENTER – N.Y.C.
FOR
THE PORT OF NEW YORK AUTHORITY

BRIDGING TRUSS 24T14B x 19'-6" LONG

FABRICATION BY: LACLEDE STEEL COMPANY

FABRICATED AT: MADISON, ILLINOIS		DESIGN DRAWING NO. 7-AB2-9	PLATE
APPROVED FOR FABRICATION BY James White FOR P.O.N.Y.A.	DATE 2/10/69	DRAWN BY: [illegible] DATE: JAN [illegible] 1969	
APPROVED FOR FABRICATION BY FOR FABRICATOR	DATE	CHECKED BY: T.M. CHURA DATE: JAN [illegible] 1969	IN CHARGE OF PROD. DEV.
DETAILED BY: A.C. WEBER		FABRICATION CONT. NO. W.T.C. [illegible]	SHEET NO. BT 214B

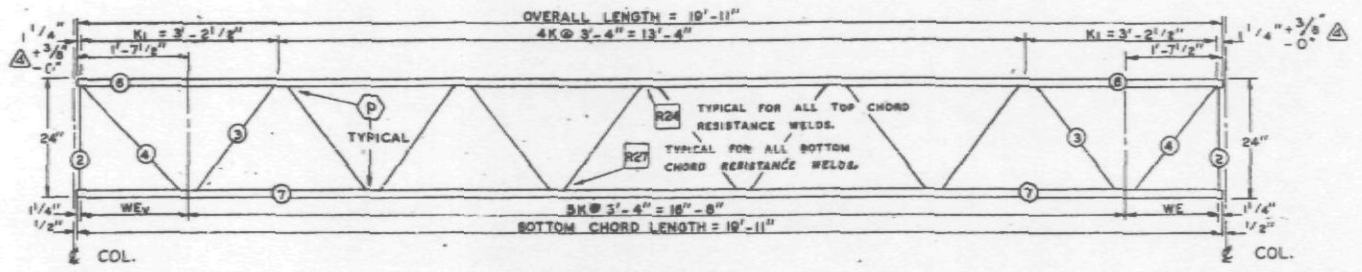

EL END | TRUSS ELEVATION | Es END

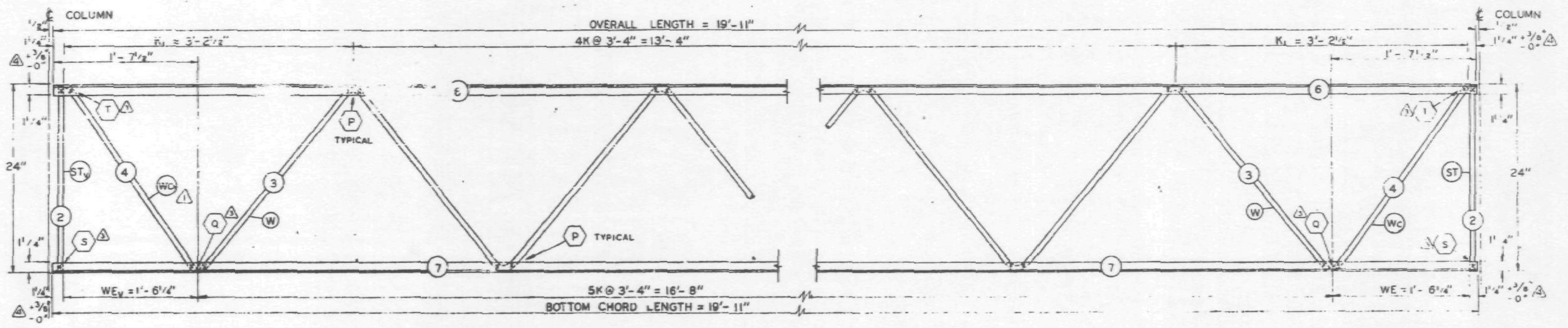

EL END ELEVATION

Es END ELEVATION

FABRICATION REQUIREMENTS		
	DESIGN	TOLERANCE
CAMBER AT MIDSPAN	0"	+ 3/8"
DESIGN DEPTH	24"	± 1/4"
PANEL "K"	3'-4"	± 1/4"
PANEL "K1"	3'-2 1/2"	± 1/4"
WEB DEPTH	23 7/8"	± 1/4"
OVERALL LENGTH	19'-11"	± 3/8"

ALL PANEL POINTS RESISTANCE WELDED (x).
ARC WELDS INDICATED AT SHADED AREAS
AND AT BOTTOM CHORD WEB SPLICES ( ).
ALL WELD DETAILS SHOWN ON SHEETS ST 290
AND ST 291.
LETTERS IN HEXAGONS INDICATE WELD DETAILS, ie., (A).
LETTERS AND NUMBERS IN SQUARES INDICATE RE-
SISTANCE WELD STRENGTH IDENTIFIED IN THE
QUALITY CONTROL PROGRAM, ie., R24.

REF. DWGS.

7-A82-1	4-1-68
7-A82-10	4-15-68
7-A83-11	6-10-68
7-A84-16 & 18	5-6-68
7-A84-28 & 41	1-3-68
7-A84-38	4-1-68

PAINT
LACLEDE ELECTROCOAT
RED NO. 10001

TRUSS DESIGNATION	TOP CHORD TWO ANGLES				BOTTOM CHORD TWO ANGLES				MAIN WEB "W"					VERTICAL "EST" STRUT					TRUSS DATA		FILLER	
	MK.	TYPE STEEL	CHORD SIZE	LENGTH	MK.	TYPE STEEL	CHORD SIZE	LENGTH	MK.	TYPE STEEL	DIA.	LENGTH	NO. OF K	MK.	TYPE STEEL	DIA.	LENGTH	NUMBER REQUIRED			NO.	DIA.
24T15 - 1911	6	A242	1 1/2" x 1 1/4" x .275"	19'-11"	7	A242	1 1/2" x 1 1/4" x .23"	19'-11"	3	A242	.98	25'-7 1/2"	5K @ 3'-4" = 16'-8"	—	—	—	—	—			—	—

Es END	TRUSS DESIGNATION	WE	VERTICAL "ST" STRUT				WEB "Wc"				
			MK.	TYPE STEEL	DIA.	LENGTH	MK.	TYPE STEEL	PCS.	DIA.	LENGTH
	24T15 ~ 1911	1'-6 1/4"	2	A242	.98	1'-11 3/4"	4	A242	1	.98	2'-5 1/2"

EL END	TRUSS DESIGNATION	BEARING ANGLES				WEV	DIAGONAL "T" STRUT				VERTICAL "STV" STRUT				END STIFFENER MK. VS			END STIFFENER MK. VS			WEB "WcV"				
		MK.	TYPE STEEL	CHORD SIZE	LENGTH		MK.	TYPE STEEL	DIA.	LENGTH	MK.	TYPE STEEL	DIA.	LENGTH	TYPE STEEL	DIA.	LENGTH	TYPE STEEL	DIA.	LENGTH	MK.	TYPE STEEL	PCS.	DIA.	LENGTH
	24T15 - 1911	—	—	—	—	1'-6 1/4"	—	—	—	—	2	A242	.98	1'-11 3/4"	—	—	—	—	—	—	4	A242	1	.98	2'-5 1/2"

NO.	DATE	REVISION	BY
4	9-6-68	END DIST. (2)	T.M.C.
3	7-5-68	AS NOTED	T.M.C.
2	7-3-68	MAIN WEB	T.M.C.
1	6-26-68	REF. DRWG. , WCV	T.M.C.

BRIDGING TRUSS DETAILS
FOR
WORLD TRADE CENTER - N.Y.C.
FOR
THE PORT OF NEW YORK AUTHORITY

BRIDGING TRUSS 24T15 x 19'-11" LONG
WORLD TRADE CENTER TOWERS A - B

FABRICATION BY LACLEDE STEEL COMPANY
FABRICATED AT MADISON, ILLINOIS
DESIGN DRAWING NO. 7-A82-10
PLATE
APPROVED FOR FABRICATION BY ___ FOR ___ DATE 9/10/68
DRAWN BY gdc DATE MAY 24, 1968
APPROVED FOR FABRICATION BY ___ FOR FABRICATOR DATE
CHECKED BY T.M.CHURA DATE MAY 24, 1968
IN CHARGE OF PROD. DEV.
DETAILED BY A.C. WEBER
FABRICATION CONT. NO. W.T.C. 221
SHEET NO. BT215

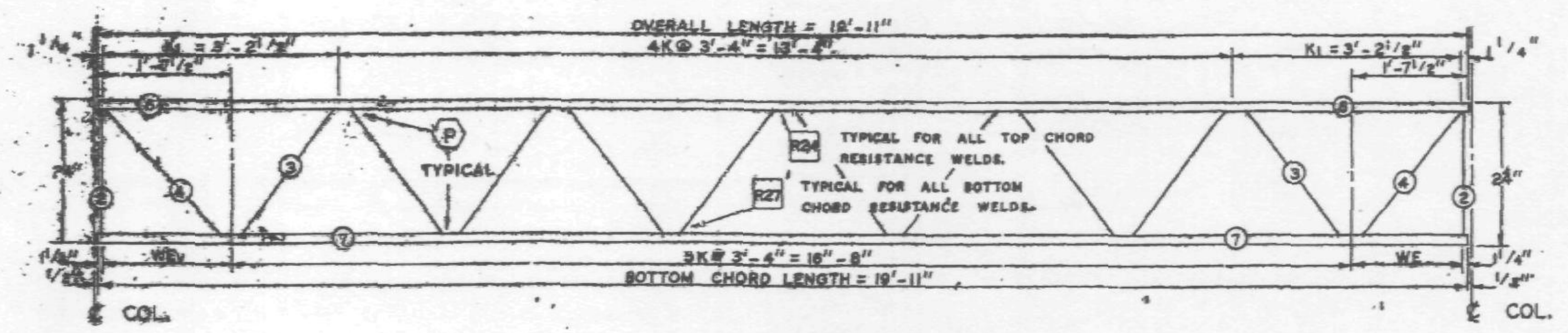

EL END　　TRUSS ELEVATION　　ES END

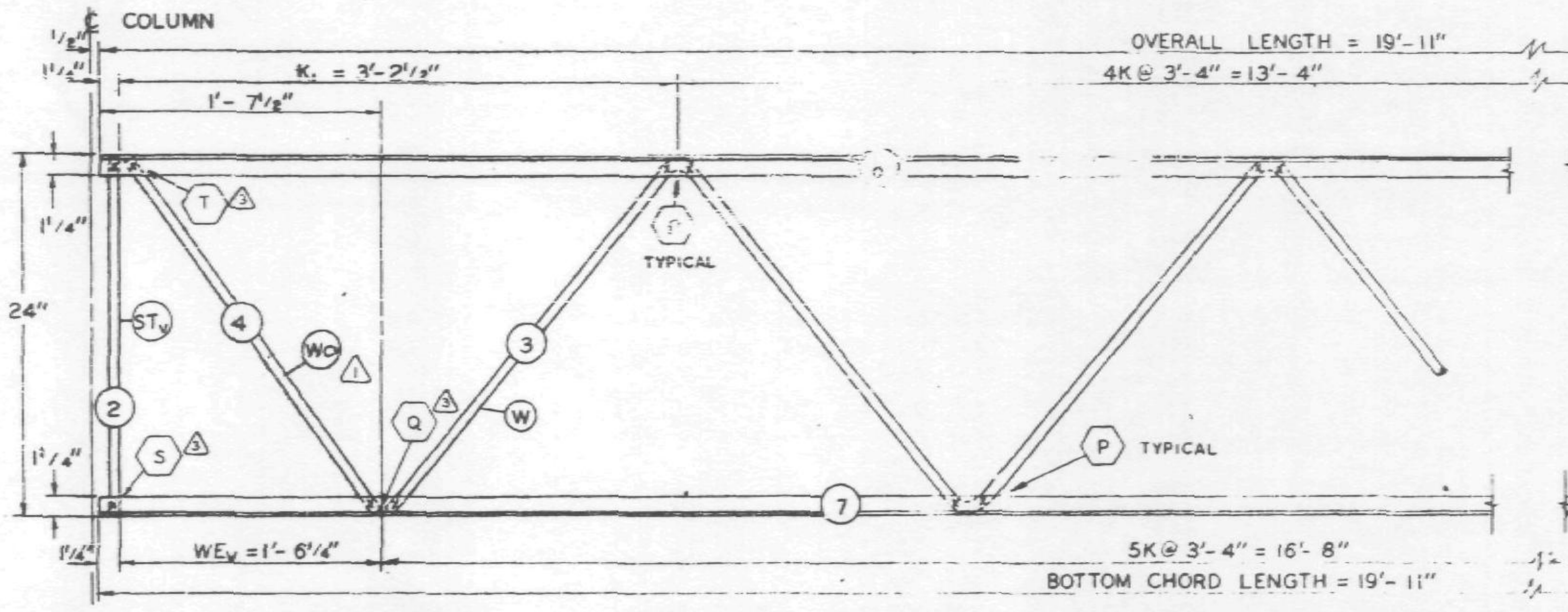

EL END ELEVATION

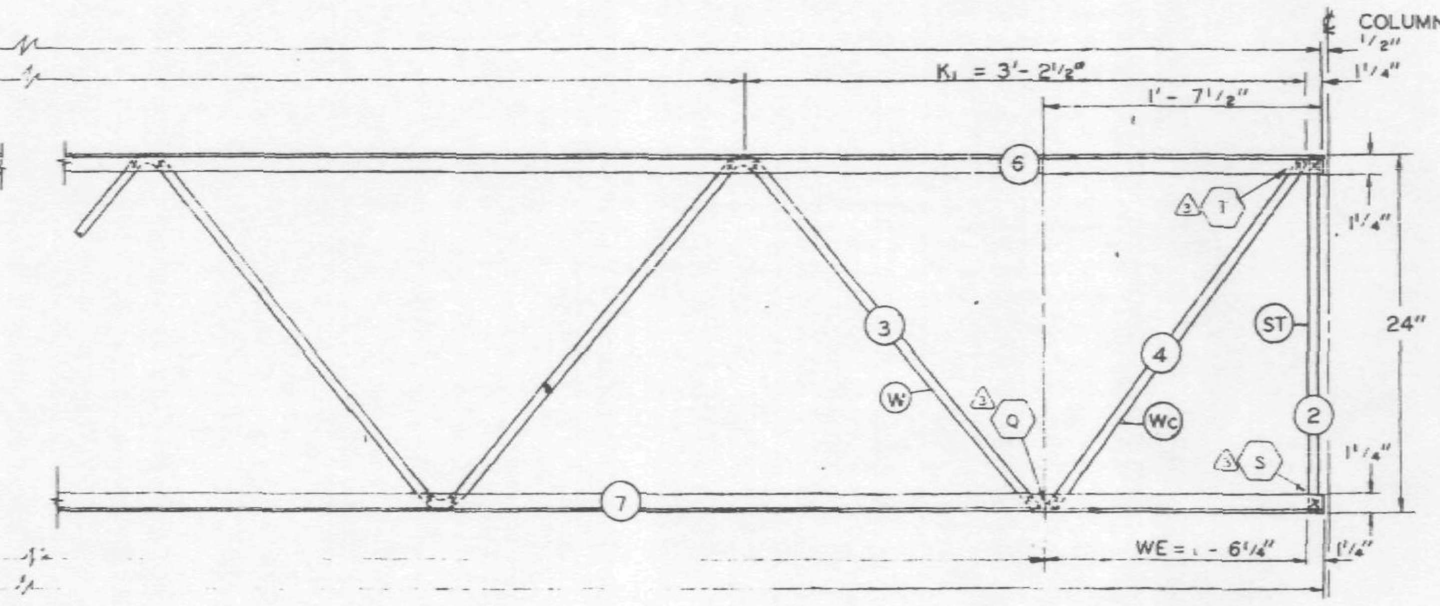

ES END ELEVATION

FABRICATION REQUIREMENTS	DESIGN	TOLERANCE
CAMBER AT MIDSPAN	0"	+ 3/8"
DESIGN DEPTH	24"	± 1/4"
PANEL "K"	3'-4"	± 1/4"
PANEL "K1"	3'-2 1/2"	± 1/4"
WEB DEPTH	23 7/8"	± 1/4"
OVERALL LENGTH	19'-11"	± 3/8"

ALL PANEL POINTS RESISTANCE WELDED (x).
ARC WELDS INDICATED AT SHADED AREAS AND AT BOTTOM CHORD WEB SPLICES (▬).
ALL WELD DETAILS SHOWN ON SHEETS ST 290 AND ST 291.
LETTERS IN HEXAGONS INDICATE WELD DETAILS, ie. (A).
LETTERS AND NUMBERS IN SQUARES INDICATE RESISTANCE WELD STRENGTH IDENTIFIED IN THE QUALITY CONTROL PROGRAM, ie. [R24].

REF. DWGS.

7-A82-1	4-1-68
7-A82-10	4-15-68
7-A83-11	6-10-68 △1
7-A84-16 & 18	5-6-68 △1
7-A84-28 & 41	1-3-68
7-A84-38	4-1-68

PAINT
LACLEDE ELECTROCOAT
RED NO. 10001

TRUSS DESIGNATION	TOP CHORD TWO ANGLES				BOTTOM CHORD TWO ANGLES				MAIN WEB "W"					VERTICAL "EST" STRUT					TRUSS DATA		FILLER	
	MK.	TYPE STEEL	CHORD SIZE	LENGTH	MK.	TYPE STEEL	CHORD SIZE	LENGTH	MK.	TYPE STEEL	DIA.	LENGTH	NO. OF K	MK.	TYPE STEEL	DIA.	LENGTH	NUMBER REQUIRED			NO.	DIA.
[illegible]	6	A242	1 1/2"x1 1/4"x.275"	19'-11"	7	A242	1 1/2"x1 1/4"x.23"	19'-11"	3	A242	.98	25'-7 1/2" △2	5K@ 3'-4" = 16'-8"	—	—	—	—	—			—	—

ES END TRUSS DESIGNATION	WE	VERTICAL "ST" STRUT				WEB "WC"				
		MK.	TYPE STEEL	DIA.	LENGTH	MK.	TYPE STEEL	PCS.	DIA.	LENGTH
24T15 - 1911	1'-6 1/4"	2	A242	.98	1'-11 3/4"	4	A242	1	.98	2'-5 1/2"

EL END TRUSS DESIGNATION	BEARING ANGLES				WEV	DIAGONAL "T" STRUT				VERTICAL "STV" STRUT				END STIFFENER MK. V5			END STIFFENER MK. V6			WEB "WCV" △1				
	MK.	TYPE STEEL	CHORD SIZE	LENGTH		MK.	TYPE STEEL	DIA.	LENGTH	MK.	TYPE STEEL	DIA.	LENGTH	TYPE STEEL	DIA.	LENGTH	TYPE STEEL	DIA.	LENGTH	MK.	TYPE STEEL	PCS.	DIA.	LENGTH
24T15 - 1911	—	—	—	—	1'-6 1/4"	—	—	—	—	2	A242	.98	1'-11 3/4"	—	—	—	—	—	—	4	A242	1	.98	2'-5 1/2"

NO.	DATE	REVISION	BY
△3	7-5-68	AS NOTED	T.M.C.
△2	7-3-68	MAIN WEB	T.M.C.
△1	6-26-68	REF. DRWG., WCV	T.M.C.

BRIDGING TRUSS DETAILS
FOR
WORLD TRADE CENTER - N.Y.C.
FOR
THE PORT OF NEW YORK AUTHORITY

BRIDGING TRUSS 24T15 x 19'-11" LONG
WORLD TRADE CENTER TOWERS A-B

FABRICATION BY: LACLEDE STEEL COMPANY
FABRICATED AT MADISON, ILLINOIS
DESIGN DRAWING NO. 7-A82-10　PLATE
APPROVED FOR FABRICATION BY JW FOR P.O.N.Y.A.　DATE 7/9/68
DRAWN BY: gdc　DATE MAY 24, 68
APPROVED FOR FABRICATION BY ____ FOR FABRICATOR　DATE
CHECKED BY: T.M.CHURA　DATE MAY 24, 1968
IN CHARGE OF PROD. DEV.
DETAILED BY A.C. WEBER
FABRICATION CONT NO. WTC 221
SHEET NO. BT215

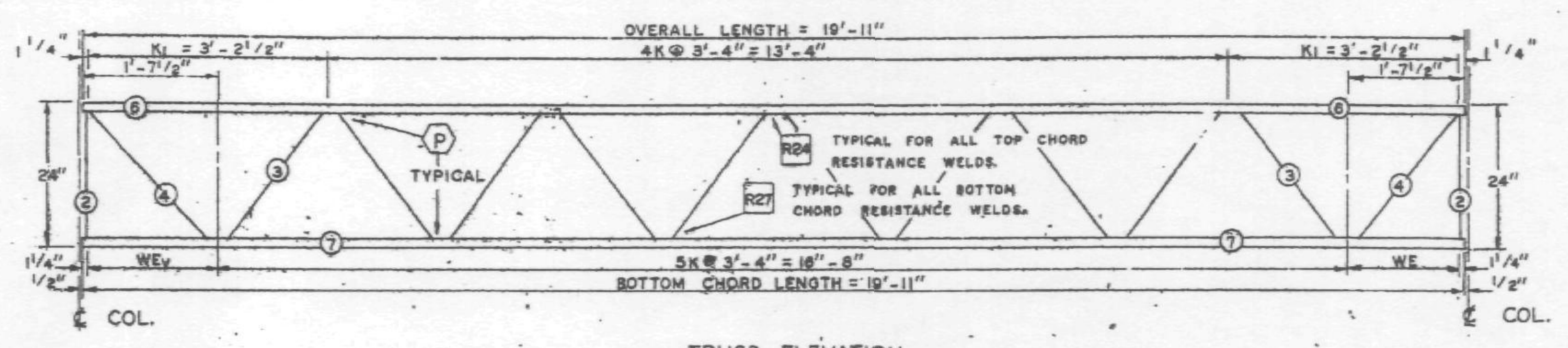

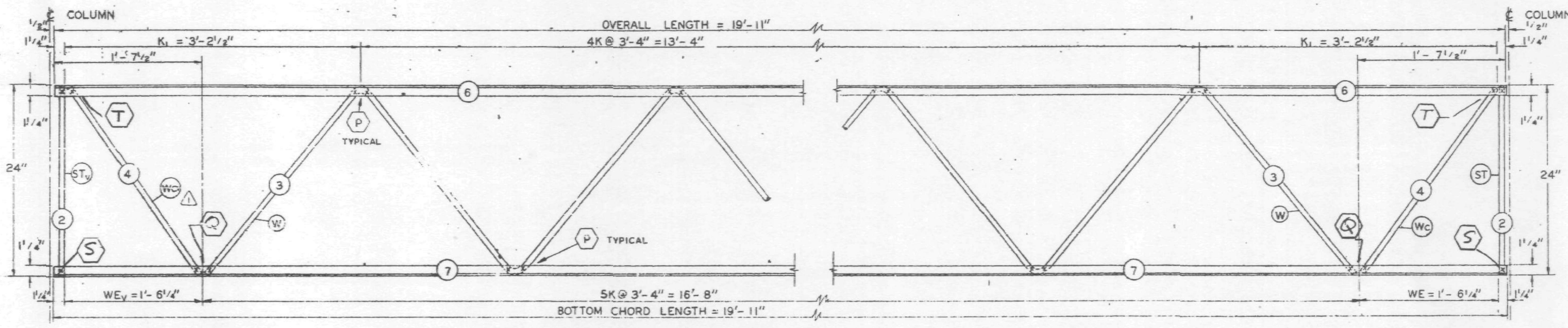

FABRICATION REQUIREMENTS	DESIGN	TOLERANCE
CAMBER AT MIDSPAN	0"	+ 3/8"
DESIGN DEPTH	24"	± 1/4"
PANEL "K"	3'-4"	± 1/4"
PANEL "K1"	3'-2 1/2"	± 1/4"
WEB DEPTH	23 7/8"	± 1/4"
OVERALL LENGTH	19'-11"	± 3/8"

ALL PANEL POINTS RESISTANCE WELDED (X).
ARC WELDS INDICATED AT SHADED AREAS AND AT BOTTOM CHORD WEB SPLICES.
ALL WELD DETAILS SHOWN ON SHEETS ST 290 AND ST 291.
LETTERS IN HEXAGONS INDICATE WELD DETAILS, i.e. (A).
LETTERS AND NUMBERS IN SQUARES INDICATE RESISTANCE WELD STRENGTH IDENTIFIED IN THE QUALITY CONTROL PROGRAM, i.e. R24.

REF. DWGS.

7-AB2-1	4-1-68
7-AB2-10	4-15-68
7-AB3-11	6-10-68
7-AB4-16 & 18	5-6-68
7-AB4-28 & 41	1-3-68
7-AB4-38	4-1-68

PAINT
LACLEDE ELECTROCOAT
RED NO. 10001

TRUSS DESIGNATION	TOP CHORD TWO ANGLES				BOTTOM CHORD TWO ANGLES				MAIN WEB "W"					VERTICAL "EST" STRUT					TRUSS DATA		FILLER	
	MK.	TYPE STEEL	CHORD SIZE	LENGTH	MK.	TYPE STEEL	CHORD SIZE	LENGTH	MK.	TYPE STEEL	DIA.	LENGTH	NO. OF K	MK.	TYPE STEEL	DIA.	LENGTH	NUMBER REQUIRED			NO.	DIA.
24T15 - 1911	6	A242	1 1/2" x 1 1/4" x .275"	19'-11"	7	A242	1 1/2" x 1 1/4" x .23"	19'-11"	3	A242	.98	30'-6 1/2"	5K @ 3'-4" = 16'-8"	—	—	—	—	—			—	—

ES END: TRUSS DESIGNATION	WE	VERTICAL "ST" STRUT				WEB "WC"				
		MK.	TYPE STEEL	DIA.	LENGTH	MK.	TYPE STEEL	PCS.	DIA.	LENGTH
24T15 - 1911	1'-6 1/4"	2	A242	.98	1'-11 3/4"	4	A242	1	.98	2'-5 1/2"

EL END: TRUSS DESIGNATION	BEARING ANGLES				WEV	DIAGONAL "T" STRUT				VERTICAL "STV" STRUT				END STIFFENER MK. V5			END STIFFENER MK. V6			WEB "WCV" (1)				
	MK.	TYPE STEEL	CHORD SIZE	LENGTH		MK.	TYPE STEEL	DIA.	LENGTH	MK.	TYPE STEEL	DIA.	LENGTH	TYPE STEEL	DIA.	LENGTH	TYPE STEEL	DIA.	LENGTH	MK.	TYPE STEEL	PCS.	DIA.	LENGTH
24T15 - 1911	—	—	—	—	1'-6 1/4"	—	—	—	—	2	A242	.98	1'-11 3/4"	—	—	—	—	—	—	4	A242	1	.98	2'-5 1/2"

SKILLING - HELLE CHRISTIANSEN - ROBERTSON
Structural & Civil Engineers
7/5/68 SK

NO.	DATE	REVISION	BY
1	6-26-68	REF. DRWG. WCV	T.M.C.

BRIDGING TRUSS DETAILS
FOR
WORLD TRADE CENTER - N.Y.C.
FOR
THE PORT OF NEW YORK AUTHORITY

BRIDGING TRUSS 24T15 x 19'-11" LONG
WORLD TRADE CENTER TOWERS A-B

FABRICATION BY LACLEDE STEEL COMPANY
FABRICATED AT MADISON, ILLINOIS
DESIGN DRAWING NO. 7-AB2-10
PLATE
APPROVED FOR FABRICATION BY FOR P.O.N.Y.A. DATE
DRAWN BY: gdc DATE MAY 24, 1968
APPROVED FOR FABRICATION BY FOR FABRICATOR DATE
CHECKED BY: T.M.CHURA DATE MAY 24, 1968
IN CHARGE OF PROD. DEV.
DETAILED BY A.C. WEBER
FABRICATION CONT. NO. WTC 221
SHEET NO. BT215

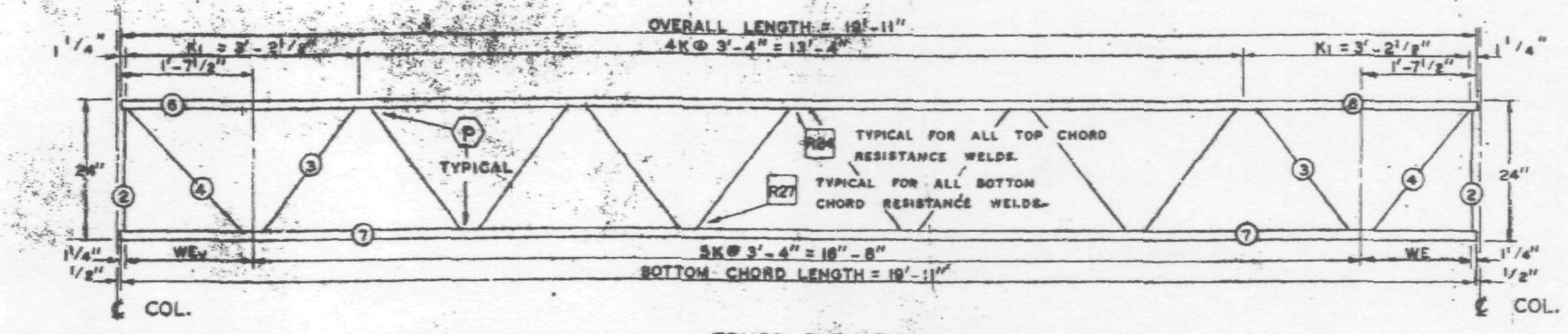

EL END — TRUSS ELEVATION — Es END

FABRICATION REQUIREMENTS	DESIGN	TOLERANCE
CAMBER AT MIDSPAN	0"	+ 3/8"
DESIGN DEPTH	24"	± 1/4"
PANEL "K"	3'-4"	± 1/4"
PANEL "K1"	3'-2½"	± 1/4"
WEB DEPTH	23⅞"	± 1/4"
OVERALL LENGTH	19'-11"	± 3/8"

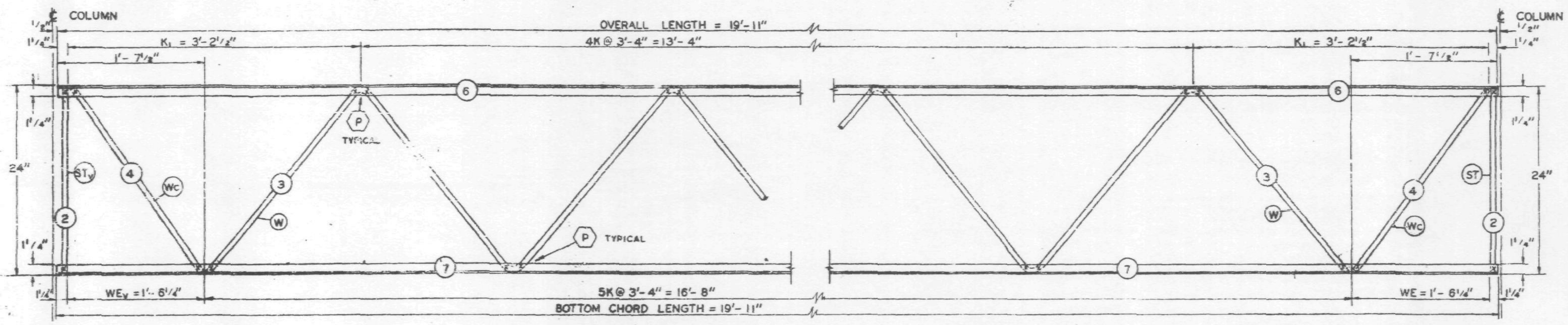

EL END ELEVATION

Es END ELEVATION

ALL PANEL POINTS RESISTANCE WELDED (x).
ARC WELDS INDICATED AT SHADED AREAS
AND AT BOTTOM CHORD WEB SPLICES (▬).
ALL WELD DETAILS SHOWN ON SHEETS ST 290 AND ST 291.
LETTERS IN HEXAGONS INDICATE WELD DETAILS, ie., (A).
LETTERS AND NUMBERS IN SQUARES INDICATE RESISTANCE WELD STRENGTH IDENTIFIED IN THE QUALITY CONTROL PROGRAM, ie., R04.

REF. DWGS.

7-AB2-1	4-1-68
7-AB2-10	4-15-68
7-AB3-11	4-15-68
7-AB4-16 & 18	5-17-68
7-AB4-28 & 41	1-3-68
7-AB4-38	4-1-68

PAINT
LACLEDE ELECTROCOAT
RED NO. 10001

TRUSS DESIGNATION	TOP CHORD TWO ANGLES				BOTTOM CHORD TWO ANGLES				MAIN WEB "W"					VERTICAL "EST" STRUT					TRUSS DATA		FILLER	
	MK.	TYPE STEEL	CHORD SIZE	LENGTH	MK.	TYPE STEEL	CHORD SIZE	LENGTH	MK.	TYPE STEEL	DIA.	LENGTH	NO. OF K	MK.	TYPE STEEL	DIA.	LENGTH	NUMBER REQUIRED			NO.	DIA.
24T15-1911	6	A242	1½" x 1¼" x .2[illegible]	19'-11"	7	A242	1½" x 1¼" x .23	19'-11"	3	A242	.98	30'-6½"	5K @ 3'-4" = 16'-8"	—	—	—	—	—			—	—

Es END	TRUSS DESIGNATION	WE	VERTICAL "ST" STRUT				WEB "Wc"				
			MK.	TYPE STEEL	DIA.	LENGTH	MK.	TYPE STEEL	PCS.	DIA.	LENGTH
	24T15-1911	1'-6¼"	2	A242	.98	1'-11¾"	4	A242	1	.98	2'-5½"

EL END	TRUSS DESIGNATION	BEARING ANGLES				WEv	DIAGONAL "T" STRUT				VERTICAL "STv" STRUT				END STIFFENER MK. V5			END STIFFENER MK. V6			WEB "Wc"				
		MK.	TYPE STEEL	CHORD SIZE	LENGTH		MK.	TYPE STEEL	DIA.	LENGTH	MK.	TYPE STEEL	DIA.	LENGTH	TYPE STEEL	DIA.	LENGTH	TYPE STEEL	DIA.	LENGTH	MK.	TYPE STEEL	PCS.	DIA.	LENGTH
	24T15-1911	—	—	—	—	1'-5¼"	—	—	—	—	2	A242	.98	1'-11¾"	—	—	—	—	—	—	4	A242	1	.98	2'-5½"

NO.	DATE	REVISION	BY

BRIDGING TRUSS DETAILS
FOR
WORLD TRADE CENTER - N.Y.C.
FOR
THE PORT OF NEW YORK AUTHORITY

BRIDGING TRUSS 24T15 x 19'-11" LONG
WORLD TRADE CENTER TOWERS A-B

FABRICATION BY LACLEDE STEEL COMPANY

FABRICATED AT MADISON, ILLINOIS		DESIGN DRAWING NO. 7-AB2-10	PLATE
APPROVED FOR FABRICATION BY James White FOR P.O.N.Y.A	DATE 6/6/68	DRAWN BY: gdc DATE MAY 24, 1968	
APPROVED FOR FABRICATION BY FOR FABRICATOR LACLEDE STEEL CO.	DATE	CHECKED BY T.M. CHURA DATE MAY 24, 1968	IN CHARGE OF PROD. DEV.
DETAILED BY A.C. WEBER		FABRICATION CONT. NO. W.T.C. 221	SHEET NO. BT215

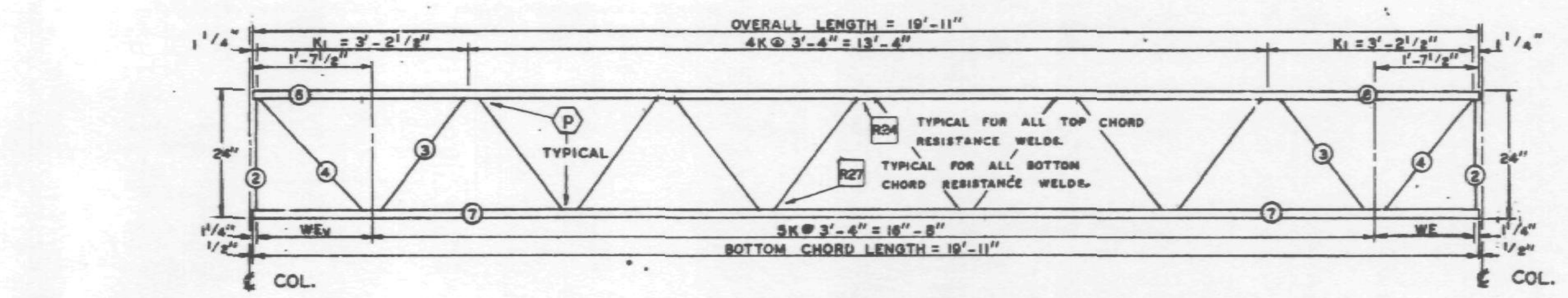

EL END — TRUSS ELEVATION — ES END

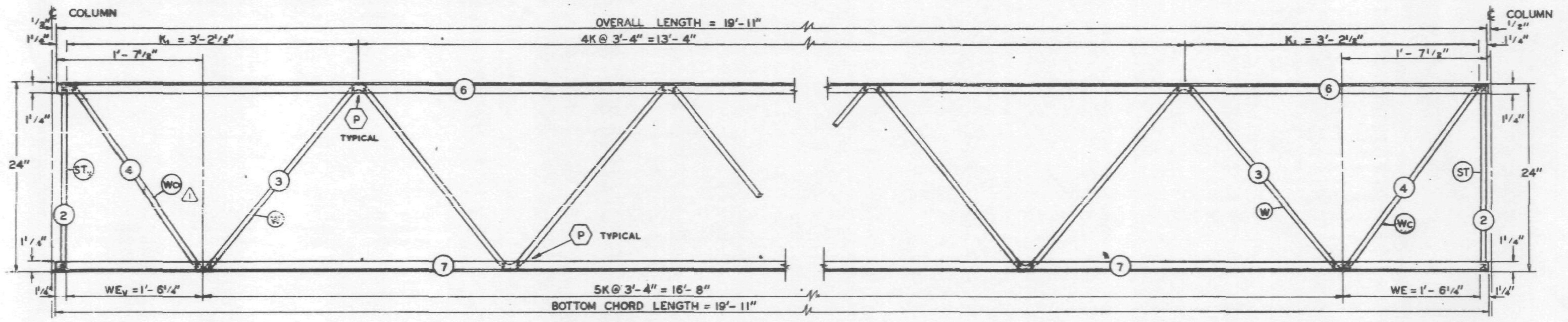

EL END ELEVATION

ES END ELEVATION

FABRICATION REQUIREMENTS	DESIGN	TOLERANCE
CAMBER AT MIDSPAN	0"	+ 3/8"
DESIGN DEPTH	24"	± 1/4"
PANEL "K"	3'-4"	± 1/4"
PANEL "K1"	3'-2 1/2"	± 1/4"
WEB DEPTH	23 7/8"	± 1/4"
OVERALL LENGTH	19'-11"	± 3/8"

ALL PANEL POINTS RESISTANCE WELDED (X).
ARC WELDS INDICATED AT SHADED AREAS AND AT BOTTOM CHORD WEB SPLICES (▬).
ALL WELD DETAILS SHOWN ON SHEETS ST 290 AND ST 291.
LETTERS IN HEXAGONS INDICATE WELD DETAILS, ie. (A).
LETTERS AND NUMBERS IN SQUARES INDICATE RESISTANCE WELD STRENGTH IDENTIFIED IN THE QUALITY CONTROL PROGRAM, ie. [R24].

REF. DWGS.

7-AB2-1	4-1-68
7-AB2-10	4-15-68
7-AB3-11	5-10-68 (1)
7-AB4-16 & 18	5-6-68 (1)
7-AB4-28 & 41	1-3-68
7-AB4-38	4-1-68

PAINT
LACLEDE ELECTROCOAT
RED NO. 10001

TRUSS DESIGNATION	TOP CHORD TWO ANGLES				BOTTOM CHORD TWO ANGLES				MAIN WEB "W"					VERTICAL "EST" STRUT					TRUSS DATA		FILLER	
	MK.	TYPE STEEL	CHORD SIZE	LENGTH	MK.	TYPE STEEL	CHORD SIZE	LENGTH	MK.	TYPE STEEL	DIA.	LENGTH	NO. OF K	MK.	TYPE STEEL	DIA.	LENGTH	NUMBER REQUIRED			NO.	DIA.
24T15 - 1911	6	A242	1 1/2" x 1 1/4" x .275"	19'-11"	7	A242	1 1/2" x 1 1/4" x .23"	19'-11"	3	A242	.98	25'-7 1/2" (2)	5K @ 3'-4" = 16'-8"	—	—	—	—	—			—	—

ES END TRUSS DESIGNATION	WE	VERTICAL "ST" STRUT				WEB "Wc"				
		MK.	TYPE STEEL	DIA.	LENGTH	MK.	TYPE STEEL	PCS.	DIA.	LENGTH
24T15 - 1911	1'-6 1/4"	2	A242	.98	1'-11 3/4"	4	A242	1	.98	2'-5 1/2"

EL END TRUSS DESIGNATION	BEARING ANGLES				WEV	DIAGONAL "T" STRUT				VERTICAL "STV" STRUT				END STIFFENER MK. VS			END STIFFENER MK. VS			WEB "WcV" (1)				
	MK.	TYPE STEEL	CHORD SIZE	LENGTH		MK.	TYPE STEEL	DIA.	LENGTH	MK.	TYPE STEEL	DIA.	LENGTH	TYPE STEEL	DIA.	LENGTH	TYPE STEEL	DIA.	LENGTH	MK.	TYPE STEEL	PCS.	DIA.	LENGTH
24T15 - 1911	—	—	—	—	1'-6 1/4"	—	—	—	—	2	A242	.98	1'-11 3/4"	—	—	—	—	—	—	4	A242	1	.98	2'-5 1/2"

NO.	DATE	REVISION	BY
(2)	7-3-68	MAIN WEB	T.M.C.
(1)	6-26-68	REF. DRWG., WcV	T.M.C.

BRIDGING TRUSS DETAILS
FOR
WORLD TRADE CENTER - N.Y.C.
FOR
THE PORT OF NEW YORK AUTHORITY

BRIDGING TRUSS 24T15 x 19'-11" LONG
WORLD TRADE CENTER TOWERS A-B

FABRICATION BY LACLEDE STEEL COMPANY

FABRICATED AT MADISON, ILLINOIS	DESIGN DRAWING NO. 7-AB2-10	PLATE
APPROVED FOR FABRICATION BY ____ FOR P.O.N.Y.A. — DATE	DRAWN BY: gdc DATE MAY 24, 1968	
APPROVED FOR FABRICATION BY ____ FOR FABRICATOR — DATE	CHECKED BY: T.M.CHURA DATE MAY 24, 1968	IN CHARGE OF PROD. DEV.
DETAILED BY A.C. WEBER	FABRICATION CONT. NO. W.T.C. 221	SHEET NO. BT215

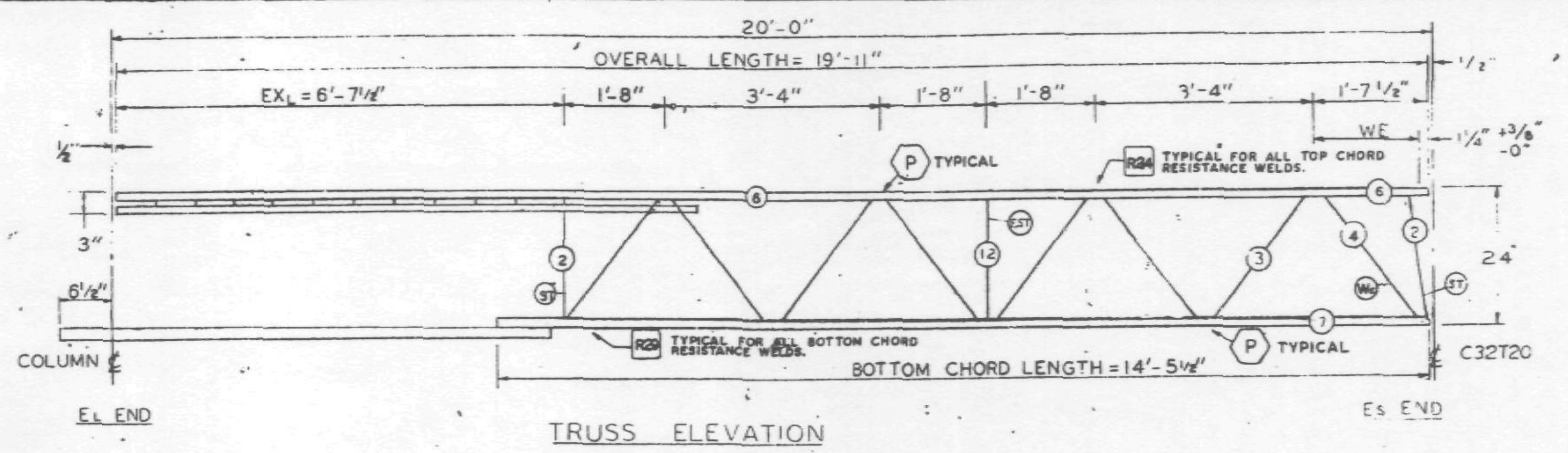

TRUSS ELEVATION

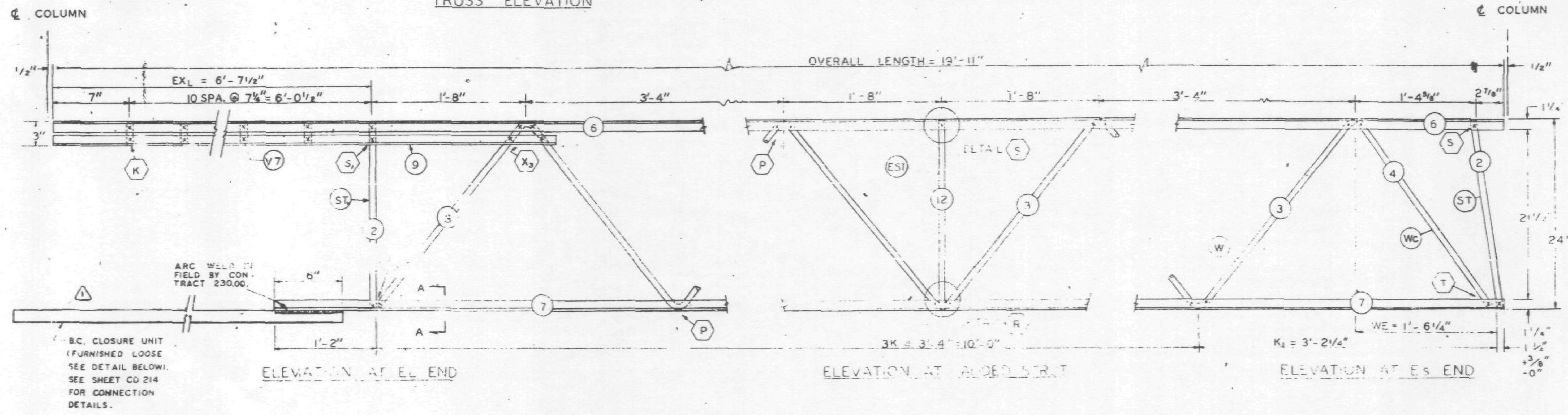

ELEVATION AT E_L END

ELEVATION AT ADDED STRUT

ELEVATION AT E_S END

FABRICATION REQUIRMENTS		
	DESIGN	TOLERANCE
CAMBER AT MIDSPAN	0"	+ 1/8"
DESIGN DEPTH	24"	± 1/4"
PANEL "K"	3'-4"	± 1/4"
PANEL "K_1"	3'-2 1/2"	± 1/4"
WEB DEPTH	23 1/2"	± 1/4"
OVERALL LENGTH	19'-11"	± 3/8"

ALL PANEL POINTS RESISTANCE WELDED (X).
ALL WELDS INDICATED AT SHADED AREAS AND, AT BOTTOM CHORD WEB SPLICES ( ).
ALL WELD DETAILS SHOWN ON SHEETS ST290, ST291, AND ST292.

SEE SHEET CD204 FOR B.C. CLOSURE CONNECTION DETAIL.
LETTERS IN HEXAGON INDICATE WELD DETAIL, ie. (A).
LETTERS AND NUMBERS IN SQUARES INDICATE RESISTANCE WELD STRENGTH IDENTIFIED IN THE QUALITY CONTROL PROGRAM, ie., [R29].

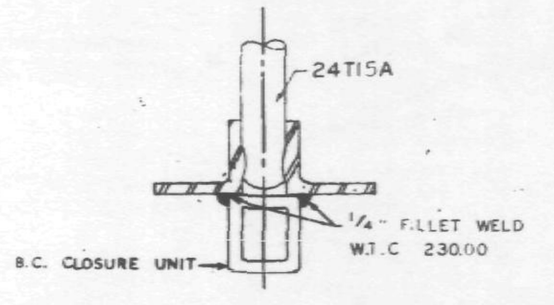

SECTION A-A (1)

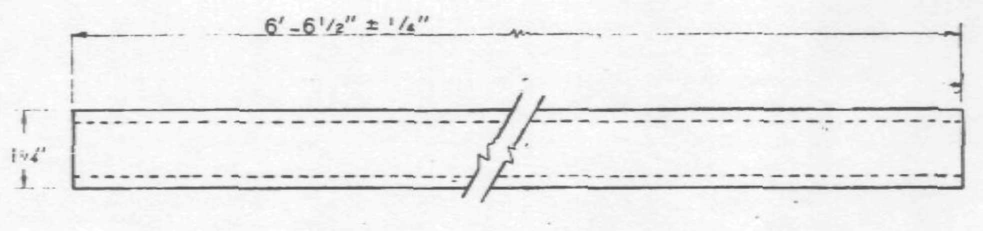

ELEVATION (1)

END VIEW

B.C. CLOSURE UNIT

REF. DWG.
7-AB2-1 10-4-68
7-AB2-14 10-4-68
7-AB4-15.1 10-4-68
7-AB4-16 & 18 7-22-68
7-AB4-19 & 38 10-15-68
7-AB4-28 & 41 7-22-68

PAINT
LACLEDE ELECTROCOAT
RED NO 10001

MATERIAL LIST FOR (2) B.C. CLOSURE UNIT			
PCS.	TYPE STEEL	SIZE	LENGTH
1	A242	1 1/4" x .187 WALL SQ. TUBING	6'-6 1/2"

TRUSS DESIGNATION	TOP CHORD TWO ANGLES				BOTTOM CHORD TWO ANGLES				MAIN WEB "W"					VERTICAL "EST" STRUT					TRUSS DATA	
	MK.	TYPE STEEL	CHORD SIZE	LENGTH	MK	TYPE STEEL	CHORD SIZE	LENGTH	MK	TYPE STEEL	DIA.	LENGTH	NO OF K	MK	TYPE STEEL	DIA	LENGTH	NUMBER REQUIRED		
24T15A-1911	6	A242	1 1/2" x 1 1/4" x .275"	19'-11"	7	A242	1 1/2 x 1 1/4 x .230	14'-5 1/2"	3	A242	.98	17'-11 1/4"	3 1/2 K @ 3'-4" = 11'-8"	12	A242	.98	1'-10 7/8"	1		

E_S END	TRUSS DESIGNATION	WE	INCLINED "ST" STRUT				WEB "Wc"				
			MK	TYPE STEEL	DIA	LENGTH	MK.	TYPE STEEL	DIA.	PCS.	LENGTH
	24T15A-1911	1'-6 1/4"	2	A242	.98	1'-11 3/4"	4	A242	.98	1	2'-5 1/2"

E_L END	TRUSS DESIGNATION	BEARING ANGLES				EX_L	DIAGONAL "T" STRUT				VERTICAL "ST" STRUT				END STIFFENER MK V7			
		MK	TYPE STEEL	CHORD SIZE	LENGTH		MK.	TYPE STEEL	DIA	LENGTH	MK	TYPE STEEL	DIA	LENGTH	TYPE STEEL	DIA	LENGTH	NO. REQ'D
	24T15A-1911	9	A242	1 1/2" x 1 1/4" x .275"	8'-8"	6'-7 1/2"	—	—	—	—	2	A242	.98	1'-11 3/4"	A242	.98	2 7/8"	10

NO.	DATE	REVISION	BY
(2)	12-4-68	TYPE STEEL BOX ADDED	G.D.C.
(1)	11-15-68	CLOSURE UNIT	LWH

BRIDGING TRUSS DETAILS
FOR
WORLD TRADE CENTER - N.Y.C.
FOR
THE PORT OF NEW YORK AUTHORITY

BRIDGING TRUSS 24T15A x 19'-11" LONG
WORLD TRADE CENTER TOWERS A-B

FABRICATION BY: LACLEDE STEEL COMPANY

FABRICATED AT MADISON, ILLINOIS		DESIGN DRAWING NO. 7-AB2-14	PLATE
APPROVED FOR FABRICATION James White FOR P.O.N.Y.A	DATE 12/11/68	DRAWN BY: DATE: OCT. 28, 1968	
APPROVED FOR FABRICATION BY ______ FOR FABRICATOR	DATE	CHECKED BY: T.M.CHURA DATE: OCT. 28, 1968	IN CHARGE OF PROD. DEV.
DETAILED BY: A.C. WEBER		FABRICATION CONT. NO. W.T.C. 221	SHEET NO. BT 215 A

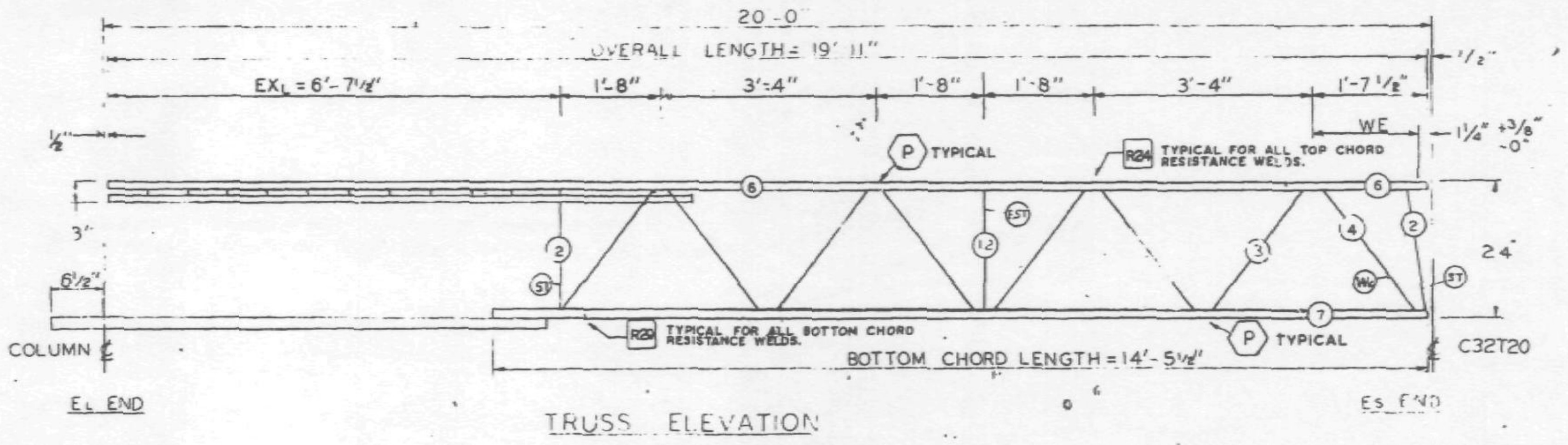

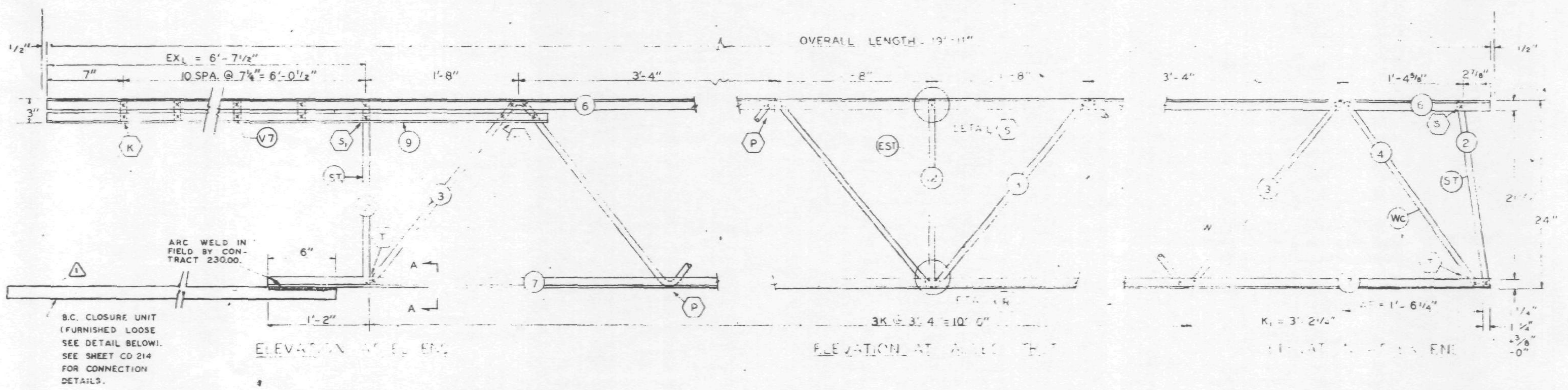

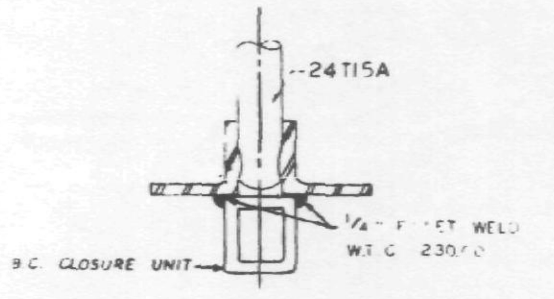

SECTION A-A ⚠1

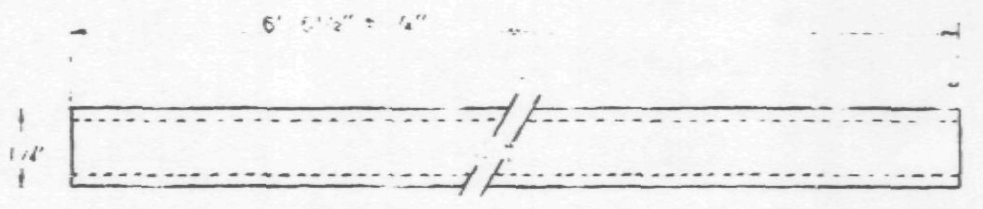

ELEVATION ⚠1

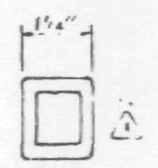

END VIEW

B.C. CLOSURE UNIT

FABRICATION REQUIRMENTS	DESIGN	TOLERANCE
CAMBER AT MIDSPAN	0"	+ 3/8"
DESIGN DEPTH	24"	± 1/4"
PANEL "K"	3'-4"	± 1/4"
PANEL "K_1"	3'-2 1/2"	± 1/4"
WEB DEPTH	23 7/8"	± 1/4"
OVERALL LENGTH	19'-11"	± 3/8"

ALL PANEL POINTS RESISTANCE WELDED (X).
ALL WELDS INDICATED AT SHADED AREAS AND AT BOTTOM CHORD WEB SPLICES ( ).
ALL WELD DETAILS SHOWN ON SHEETS ST290, ST291, AND ST292.

SEE SHEET CD204 FOR B.C. CLOSURE CONNECTION DETAIL.
LETTERS IN HEXAGON INDICATE WELD DETAIL, ie. (A).
LETTERS AND NUMBERS IN SQUARES INDICATE RESISTANCE WELD STRENGTH IDENTIFIED IN THE QUALITY CONTROL PROGRAM, ie., R29.

REF. DWG.	
7-AB2-1	10-4-68
7-AB2-14	10-4-68
7-AB4-15.1	10-4-68
7-AB4-16 & 18	7-22-68
7-AB4-19 & 38	10-15-68
7-AB4-28 & 41	7-22-68

PAINT
LACLEDE ELECTROCOAT
RED NO 10001

⚠1 MATERIAL LIST FOR B.C. CLOSURE UNIT

PCS.	SIZE	LENGTH	Type St
1	1/4" x .187 WALL SQ. TUBING	6'-6 1/2"	A242

TRUSS DESIGNATION	TOP CHORD TWO ANGLES				BOTTOM CHORD TWO ANGLES				MAIN WEB "W"					VERTICAL "EST" STRUT					TRUSS DATA	
	MK.	TYPE STEEL	CHORD SIZE	LENGTH	MK.	TYPE STEEL	CHORD SIZE	LENGTH	MK.	TYPE STEEL	DIA	LENGTH	NO OF K	MK.	TYPE STEEL	DIA	LENGTH	NUMBER REQUIRED		
24T15A-1911	6	A242	1 1/2"x1 1/4"x.275"	19'-11"	7	A242	1 1/2"x1 1/4"x.230	14'-5 1/2"	3	A242	.98	17'-11 1/4"	3 1/2K @ 3'-4" = 11'-8"	12	A242	.98	1'-10 7/8"	1		

E_S END TRUSS DESIGNATION	WE	INCLINED "ST" STRUT				WEB "Wc"				
		MK	TYPE STEEL	DIA	LENGTH	MK.	TYPE STEEL	DIA.	PCS.	LENGTH
24T15A-1911	1'-6 1/4"	2	A242	.98	1'-11 3/4"	4	A242	.98	1	2'-5 1/2"

E_L END TRUSS DESIGNATION	BEARING ANGLES				EX_L	DIAGONAL "T" STRUT				VERTICAL "ST_1" STRUT				END STIFFENER MK V7			
	MK	TYPE STEEL	CHORD SIZE	LENGTH		MK.	TYPE STEEL	DIA	LENGTH	MK.	TYPE STEEL	DIA	LENGTH	TYPE STEEL	DIA	LENGTH	NO. REQ'D
24T15A-1911	9	A242	1 1/2"x1 1/4"x.275"	8'-8"	6'-7 1/2"	—	—	—	—	2	A242	.98	1'-11 3/4"	A242	.98	2 7/8"	10

SKILLING - HELLE CHRISTIANSEN - ROBERTSON
Structural & Civil Engineers
☐ APPROVED
☒ APPROVED AS NOTED
12/3/68 SK

NO.	DATE	REVISION	BY
⚠1	11-15-68	CLOSURE UNIT	LWH

BRIDGING TRUSS DETAILS
FOR
WORLD TRADE CENTER - N.Y.C.
FOR
THE PORT OF NEW YORK AUTHORITY

BRIDGING TRUSS 24T15A x 19'-11" LONG
WORLD TRADE CENTER TOWERS A-B

FABRICATION BY LACLEDE STEEL COMPANY
FABRICATED AT MADISON, ILLINOIS
DESIGN DRAWING NO: 7-AB2-14
PLATE
APPROVED FOR FABRICATION BY FOR P.O.N.Y.A. DATE
DRAWN BY:
DATE OCT. 28, 1968
APPROVED FOR FABRICATION BY FOR FABRICATOR DATE
CHECKED BY: T.M.CHURA
DATE OCT. 28, 1968
IN CHARGE OF PROD. DEV.
LACLEDE STEEL CO.
DETAILED BY A.C. WEBER
FABRICATION CONT. NO. W.T.C. 221
SHEET NO. BT 215 A

FABRICATION REQUIRMENTS		
	DESIGN	TOLERANCE
CAMBER AT MIDSPAN	0"	+ 3/8"
DESIGN DEPTH	24"	± 1/4"
PANEL "K"	3'-4"	± 1/4"
PANEL "K_1"	3'-2½"	± 1/4"
WEB DEPTH	23 7/8"	± 1/4"
OVERALL LENGTH	19'-11"	± 3/8"

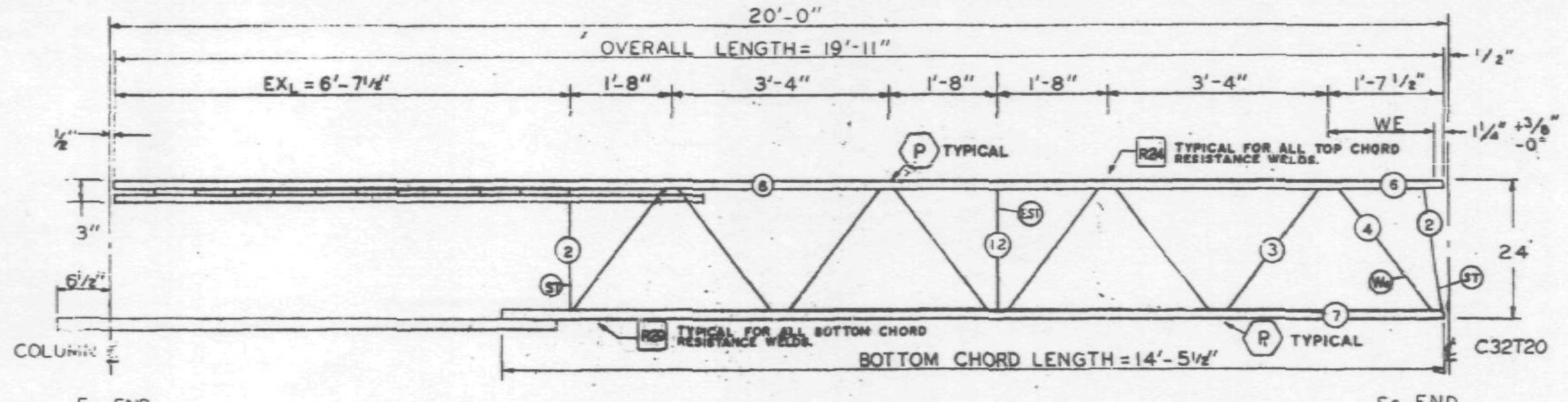

E_L END

TRUSS ELEVATION

E_S END

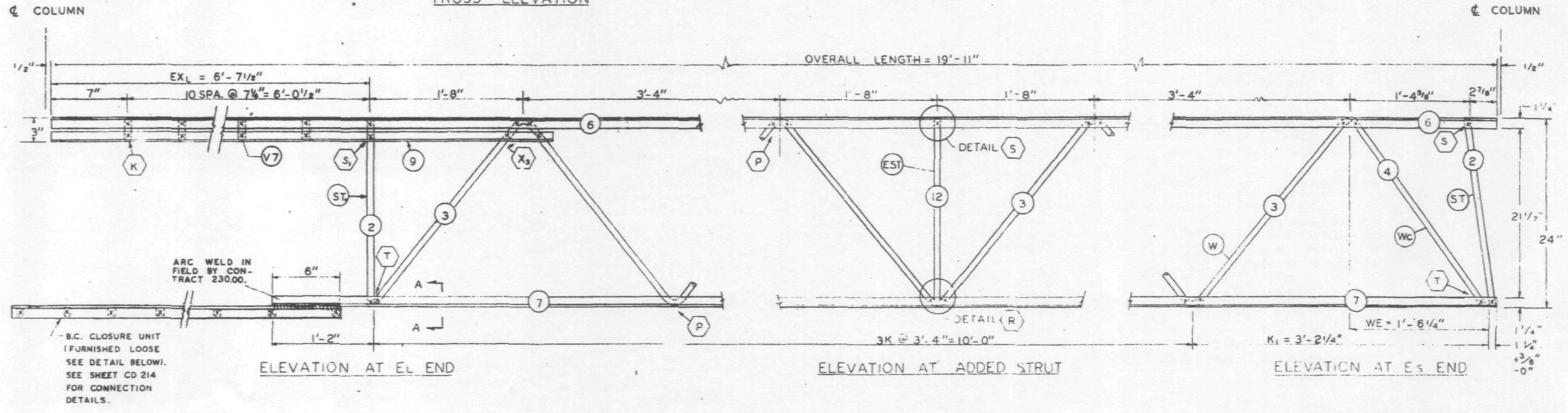

ELEVATION AT E_L END

ELEVATION AT ADDED STRUT

ELEVATION AT E_S END

ALL PANEL POINTS RESISTANCE WELDED (X).
ALL WELDS INDICATED AT SHADED AREAS AND AT BOTTOM CHORD WEB SPLICES.
ALL WELD DETAILS SHOWN ON SHEETS ST290, ST291, AND ST292.

SEE SHEET CD204 FOR B.C. CLOSURE CONNECTION DETAIL.
LETTERS IN HEXAGON INDICATE WELD DETAIL, ie. (A).
LETTERS AND NUMBERS IN SQUARES INDICATE RESISTANCE WELD STRENGTH IDENTIFIED IN THE QUALITY CONTROL PROGRAM, ie., [R29].

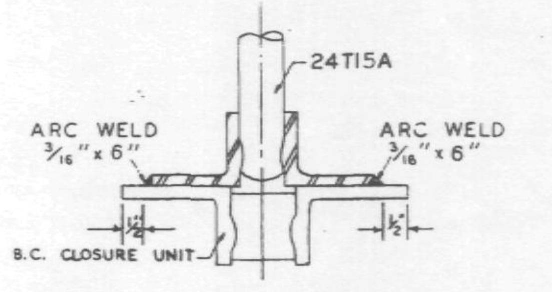

SECTION A-A

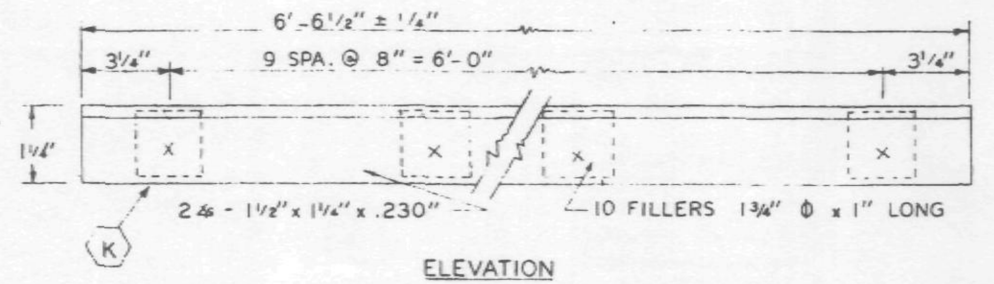

ELEVATION

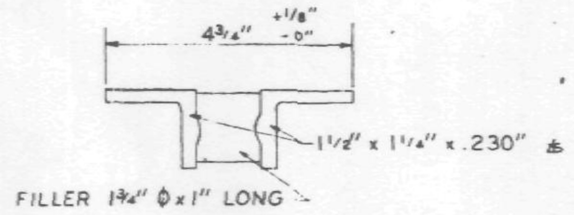

END VIEW

B.C. CLOSURE UNIT

REF. DWG.	
7-AB2-1	10-4-68
7-AB2-14	10-4-68
7-AB4-15.1	10-4-68
7-AB4-16 & 18	7-22-68
7-AB4-19 & 38	10-15-68
7-AB4-28 & 41	7-22-68

MATERIAL LIST FOR B.C. CLOSURE UNIT		
PCS.	SIZE	LENGTH
2	1½"x1¼"x.23" ∠s	6'-6½"
10	1¾" ϕ FILLERS	1"

PAINT
LACLEDE ELECTROCOAT
RED NO 10001

TRUSS DESIGNATION	TOP CHORD TWO ANGLES				BOTTOM CHORD TWO ANGLES				MAIN WEB "W"					VERTICAL "EST" STRUT					TRUSS DATA	
	MK.	TYPE STEEL	CHORD SIZE	LENGTH	MK.	TYPE STEEL	CHORD SIZE	LENGTH	MK.	TYPE STEEL	DIA.	LENGTH	NO. OF K	MK.	TYPE STEEL	DIA.	LENGTH	NUMBER REQUIRED		
24T15A-1911	6	A242	1½"x1¼"x.275"	19'-11"	7	A242	1½"x1¼"x.230"	14'-5½"	3	A242	.98	17'-11¼"	3½K @ 3'-4" = 11'-8"	12	A242	.98	1'-10⅞"	1		

E_S END	TRUSS DESIGNATION	WE	INCLINED "ST" STRUT				WEB "Wc"				
			MK.	TYPE STEEL	DIA.	LENGTH	MK.	TYPE STEEL	DIA.	PCS.	LENGTH
	24T15A-1911	1'-6¼"	2	A242	.98	1'-11¾"	4	A242	.98	1	2'-5½"

E_L END	TRUSS DESIGNATION	BEARING ANGLES				EX_L	DIAGONAL "T" STRUT				VERTICAL "ST_v" STRUT				END STIFFENER MK V7			
		MK.	TYPE STEEL	CHORD SIZE	LENGTH "Y"		MK.	TYPE STEEL	DIA.	LENGTH	MK.	TYPE STEEL	DIA.	LENGTH	TYPE STEEL	DIA.	LENGTH	NO. REQ'D
	24T15A-1911	9	A242	1½"x1¼"x.275"	8'-8"	6'-7½"	—	—	—	—	2	A242	.98	1'-11¾"	A242	.98	2⅞"	10

NO.	DATE	REVISION	BY

BRIDGING TRUSS DETAILS
FOR
WORLD TRADE CENTER - N.Y.C.
FOR
THE PORT OF NEW YORK AUTHORITY

BRIDGING TRUSS 24T15A x 19'-11" LONG
WORLD TRADE CENTER TOWERS A-B

FABRICATION BY LACLEDE STEEL COMPANY

FABRICATED AT MADISON, ILLINOIS		DESIGN DRAWING NO. 7-AB2-14	PLATE
APPROVED FOR FABRICATION BY [signature] FOR PONYA	DATE 11/7/68	DRAWN BY [signature] DATE OCT. 28, 1968	
APPROVED FOR FABRICATION BY ______ FOR FABRICATOR	DATE	CHECKED BY: T.M.CHURA DATE OCT. 28, 1968	IN CHARGE
DETAILED BY LACLEDE STEEL CO.		FABRICATION CONT. NO W.T.C. 221	SHEET BT 215

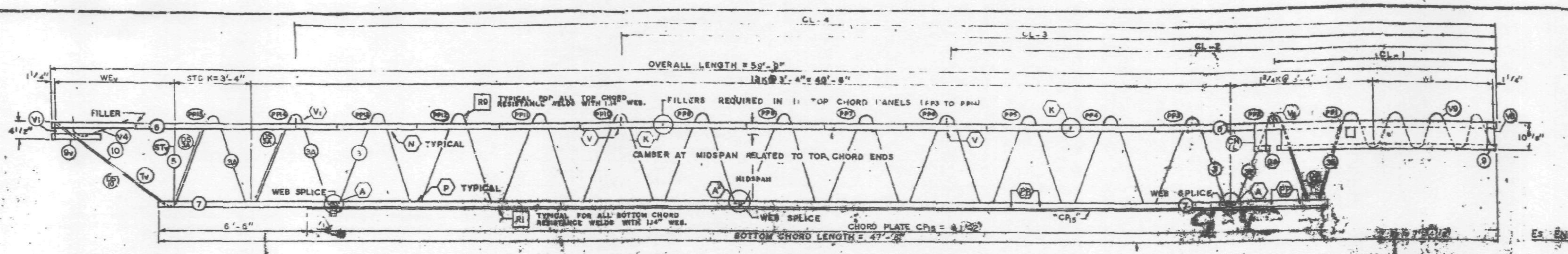

TRUSS ELEVATION

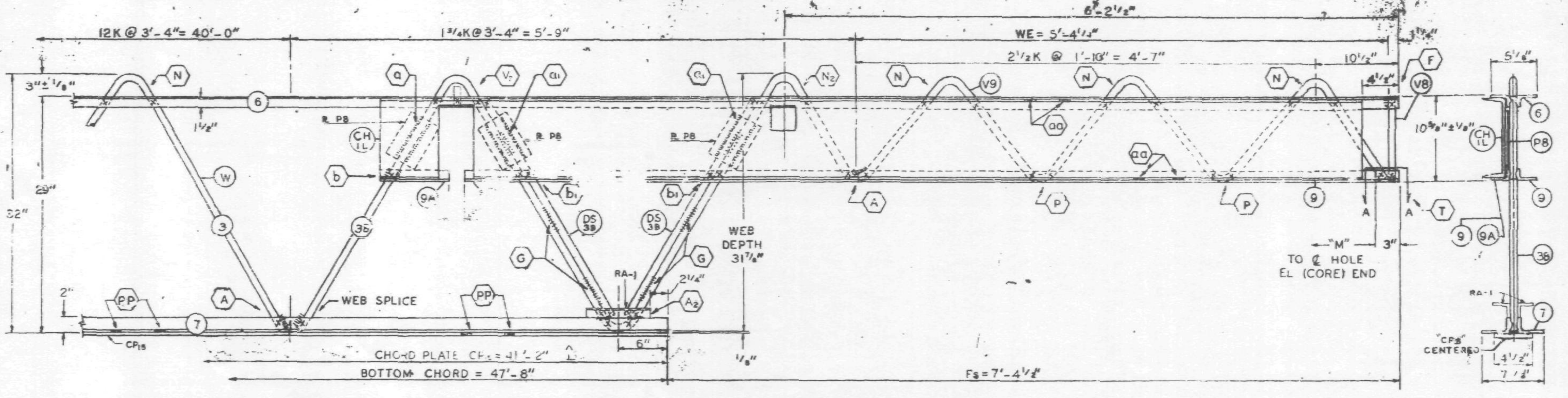

Es END (COLUMN)

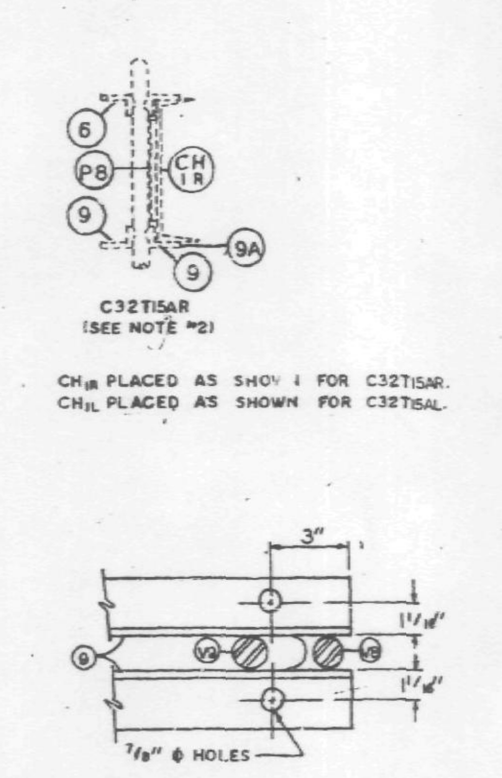

SECTION A-A

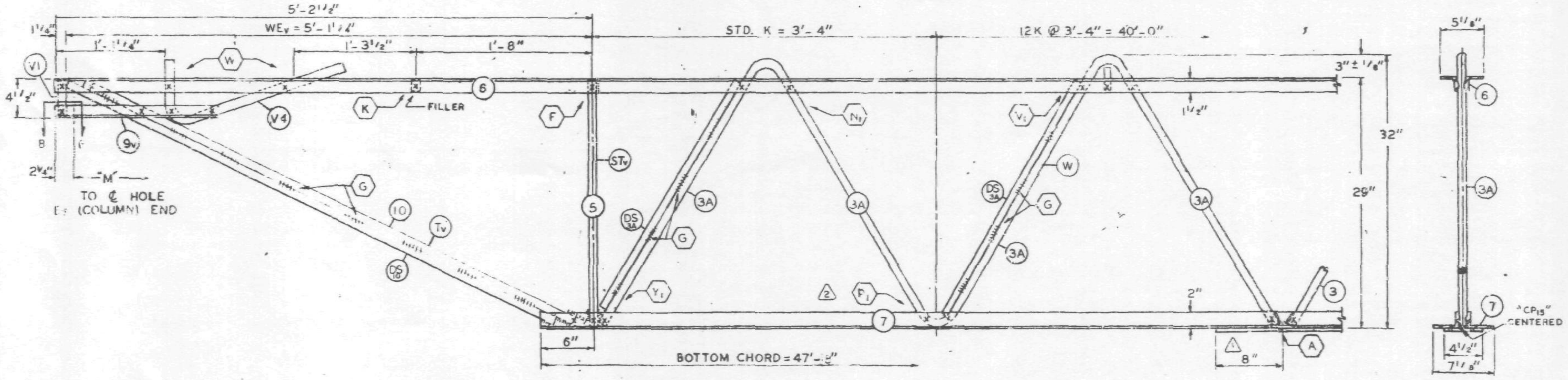

EL END (CORE)

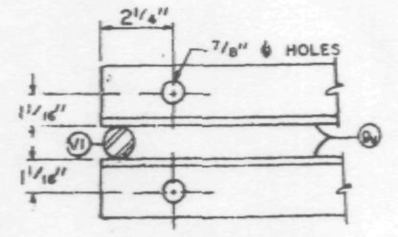

SECTION B-B

FABRICATION REQUIREMENTS	DESIGN	TOLERANCE
CAMBER AT MIDSPAN	2¹/16"	± 3/8"
DESIGN DEPTH	29"	± 1/4"
PANEL "K"	3'-4"	± 1/4"
OVERALL LENGTH	59'-9"	± 3/8"
WEB DEPTH	31 7/8"	± 1/4"

ALL PANEL POINTS RESISTANCE WELDED (X).
ARC WELDS INDICATED AT SHADED AREAS AND AT BOTTOM CHORD WEB SPLICES.
LETTERS IN HEXAGON INDICATE WELD DETAIL, ie., (A).
LETTERS AND NUMBERS IN SQUARES INDICATE RESISTANCE WELD STRENGTH IDENTIFIED IN THE QUALITY CONTROL PROGRAM, ie., [R1].
ALL WELD DETAILS SHOWN ON SHEETS ST290, ST291, ST292 & ST293.
ALL CHANNEL DETAILS SHOWN ON SHEET ST 407.
CHORD PLATE DETAILS SHOWN ON SHEET ST 283.
SEE SHEET ST 295 FOR V1 & V4 DETAILS.

NOTE 2

ALL DETAILS & ELEVATIONS SHOWN FOR C32T15AL TRUSSES ARE APPLICABLE TO C32T15AR TRUSSES WITH CHANNEL CHIR AND BEARING ANGLE 9A PLACED ON OPP. HAND AS SHOWN.

NO.	DATE	REVISION	BY
2	11-7-68	AS NOTED	G.D.C.
1	10-31-68	CP_{15}	LWH

(2) REF. DRWG.

7-AB1-14	10-4-68
7-AB1-54	10-4-68
7-AB1-53	7-22-68
7-AB3-2	1-3-68
7-AB3-24	8-15-68
7-AB4-17 & 17.2	10-4-68
SA-124	10-11-68
7-AB1-55	10-15-68

TRUSS DESIGNATION	TOP CHORD TWO ANGLES MK.	TYPE STEEL	CHORD SIZE	LENGTH	BOTTOM CHORD TWO ANGLES MK.	TYPE STEEL	CHORD SIZE	LENGTH	MAIN WEB "W" MK.	TYPE STEEL	DIA.	LENGTH	NO. OF K	FILLER NO.	DIA.	"M" C/C HOLES	CHORD PLATE (1) MK.	TYPE STEEL	SIZE	LENGTH	CONNECTION FILLER NO.	DIA.	LENGTH	CHANNEL PLATES MK.	TYPE STEEL	PCS.	SIZE	LENGTH	REINFORCING ANGLES MK.	TYPE STEEL	PCS.	SIZE	LENGTH
24T15AL-599	6	A242	2"x1½"x.37"	59'-_"	7	A36	3"x2"x.37"	47'-8"	3 3A 3B	A242 A242 A242	1.14" 1.14" 1.14"	68'-6¼" 12'-5½" 10'-7⅜"	11K @ 3'-4" = 36'-8" 2K @ 3'-4" = 6'-8" 1¾K @ 3'-4" = 5'-9"	12	1.14	59'-3¾"	CP_{15}	A36	4½"x.36"	41'-2"	4	1.14	3"	PB	A36	3	[illegible]	5½"	RA1	A36	2	3"x2"x.37"	7½"

COLUMN END

Es END TRUSS DESIGNATION	BEARING ANGLES MK.	TYPE STEEL	CHORD SIZE	PCS.	LENGTH	WE	DOUBLE STRUT MK.	TYPE STEEL	DIA.	LENGTH (2 REQ'D)	CHORD PLATE MK.	TYPE STEEL	SIZE	LENGTH	END STIFFENER MK. V8 TYPE STEEL	DIA.	LENGTH	MK. V9 TYPE STEEL	DIA.	LENGTH	MK. V10 TYPE STEEL	DIA.	LENGTH	CHANNEL (SEE NOTE #2) MK.	TYPE STEEL	CHANNEL SIZE	LENGTH
24T15AL-599	9 9A	A242 A242	2"x1½"x.25" 2"x1½"x.25"	2 1	9'-5" 8½"	5'-4¼"	DS_{3B}	A242	1.14	2'-6¾"	—	—	—	—	A242	1.14	10½"	A242	1.14	8'-3⅞"	—	—	—	CHIL CHIR	A36 A36	10 C 30 10 C 30	10'-0" 10'-0"

CORE END

EL END TRUSS DESIGNATION	BEARING ANGLES MK.	TYPE STEEL	CHORD SIZE	LENGTH	WE_v	DIAGONAL "T_v" STRUT MK.	TYPE STEEL	DIA.	LENGTH	VERTICAL "ST_v" STRUT MK.	TYPE STEEL	DIA.	LENGTH	END STIFFENER MK. V1 TYPE STEEL	DIA.	LENGTH	MK. V2 TYPE STEEL	DIA.	LENGTH	MK. V4 TYPE STEEL	DIA.	LENGTH	DOUBLE STRUT MK.	TYPE STEEL	DIA.	LENGTH	DOUBLE STRUT MK.	TYPE STEEL	DIA.	LENGTH (2 REQ'D)	DOUBLE STRUT MK.	TYPE STEEL	DIA.	LENGTH
24T15AL-599	9_v	A242	2"x1½"x.25"	1'-7"	5'-1¼"	10	A242	1.14	5'-4⅞"	5	A242	1.14	2'-4⅞"	A242	1.14	4⅜"	—	—	—	A242	1.14	2'-2½"	DS_{10}	A242	.75	5'-4⅞"	DS_{3A}	A242	.75	2'-6¾"	—	—	—	—

CHECK DIMENSION FOR TRUSS FAB.

LOCATION OF TRANS. TRUSS				
CL-1	CL-2	CL-3	CL-4	Fs
9'-6½"	22'-10½"	36'-2½"	49'-6½"	7'-4½"

PAINT
LACLEDE ELECTROCOAT
RED NO. 10001

FLOOR TRUSS DETAILS
FOR
WORLD TRADE CENTER — N.Y.C.
FOR
THE PORT OF NEW YORK AUTHORITY

FLOOR TRUSS C32T15AL x 59'-9" LONG (SEE NOTE #2)
WORLD TRADE CENTER TOWERS A & B

FABRICATION BY: LACLEDE STEEL COMPANY

FABRICATED AT MADISON, ILLINOIS		DESIGN DRAWING NO. 7-AB1-14	PLATE
APPROVED FOR FABRICATION BY: FOR P.O.N.Y.A.	DATE 11/18/68	DRAWN BY: gdc DATE OCT. 1, 1968	
APPROVED FOR FABRICATION BY: James White FOR FABRICATOR	DATE	CHECKED BY: T.M.CHURA DATE OCT. 1, 1968	IN CHARGE OF PROD. DEV.
DETAILED BY: A. CARL WEBER		FABRICATION CONT. NO. W.T.C. 221	SHEET NO. ST 215AL

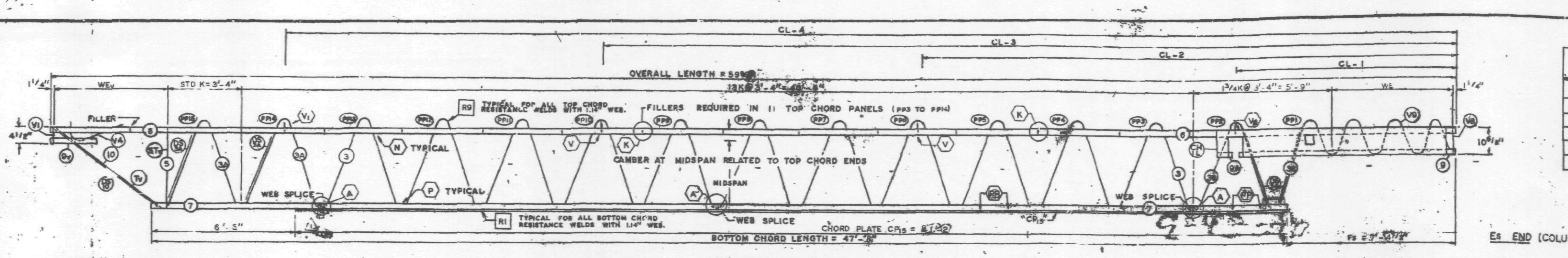

TRUSS ELEVATION

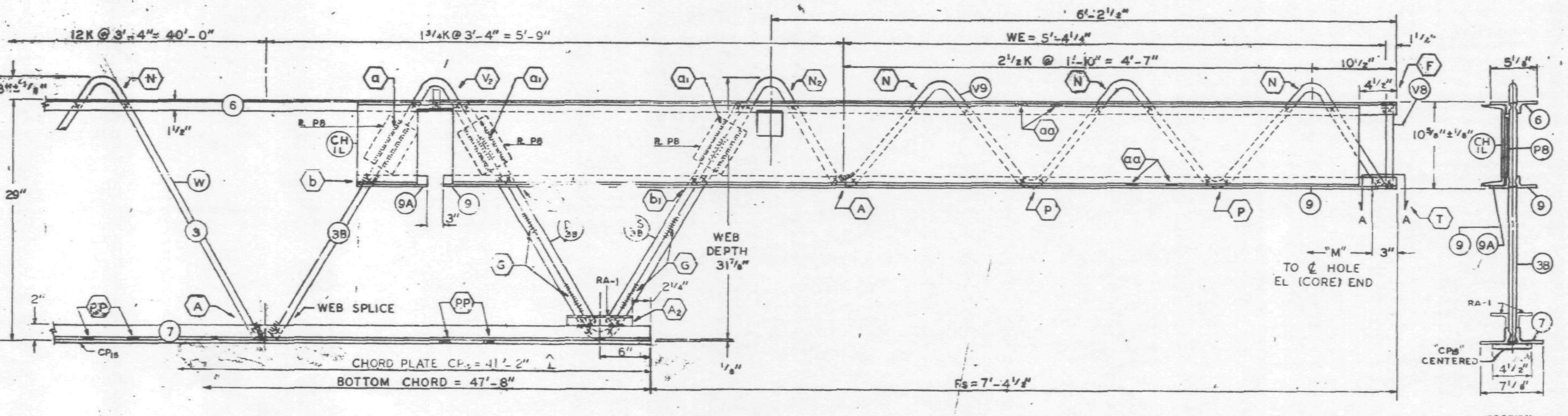

Es END (COLUMN)

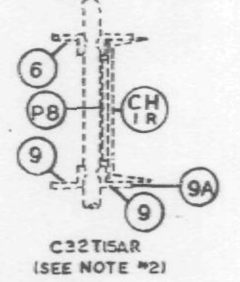

CH1R PLACED AS SHOWN FOR C32T15AR.
CH1L PLACED AS SHOWN FOR C32T15AL.

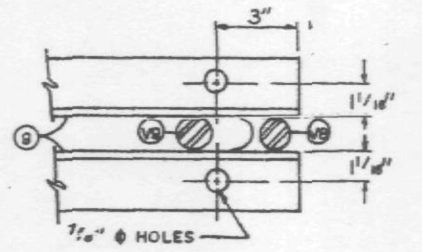

SECTION A-A

ALL PANEL POINTS RESISTANCE WELDED. (X).
ARC WELDS INDICATED AT SHADED AREAS
AND AT BOTTOM CHORD WEB SPLICES.
LETTERS IN HEXAGON INDICATE WELD DETAIL, ie., (A).
LETTERS AND NUMBERS IN SQUARES INDICATE RESISTANCE WELD STRENGTH IDENTIFIED IN THE QUALITY CONTROL PROGRAM. ie., [R1].
ALL WELD DETAILS SHOWN ON SHEETS ST290, ST291, ST292 & ST293.
ALL CHANNEL DETAILS SHOWN ON SHEET ST 407.
CHORD PLATE DETAILS SHOWN ON SHEET ST 283.
SEE SHEET ST 295 FOR V1 & V4 DETAILS.

NOTE 2

ALL DETAILS & ELEVATIONS SHOWN FOR C32T15AL TRUSSES ARE APPLICABLE TO C32T15AR TRUSSES WITH CHANNEL CH1R AND BEARING ANGLE 9A PLACED ON OPP. HAND AS SHOWN.

FABRICATION REQUIREMENTS	DESIGN	TOLERANCE
CAMBER AT MIDSPAN	2 1/16"	± 3/8"
DESIGN DEPTH	29"	± 1/4"
PANEL "K"	3'-4"	± 1/4"
OVERALL LENGTH	59'-9"	± 3/8"
WEB DEPTH	31 7/8"	± 1/4"

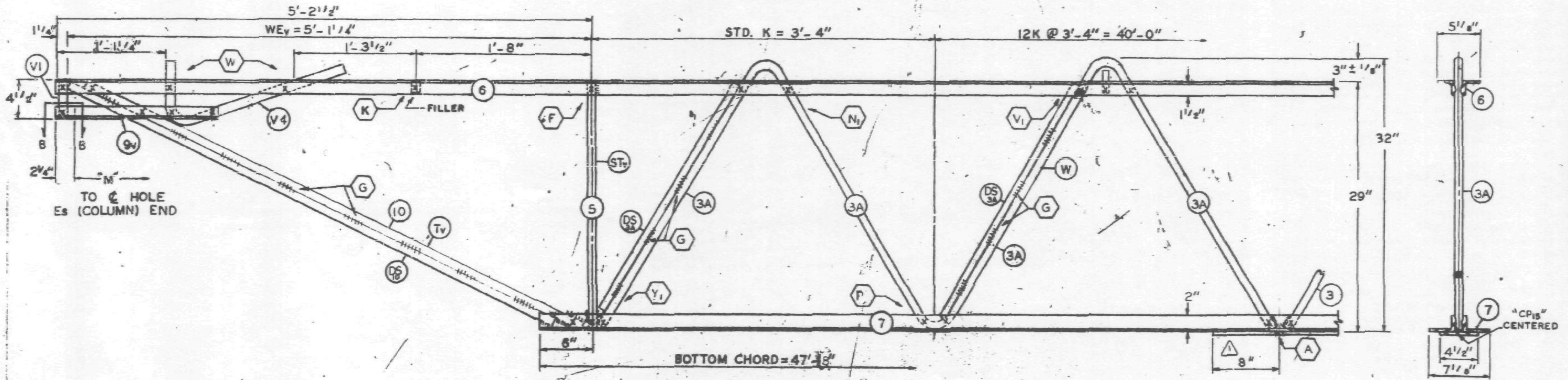

EL END (CORE)

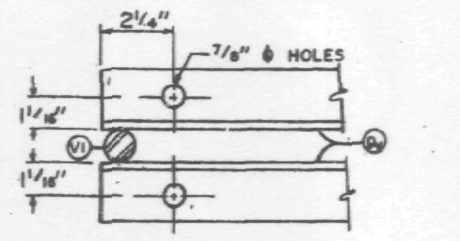

SECTION B-B

NO.	DATE	REVISION	BY
1	10-31-68	CP15	LWH

REF. DRWG.

7-AB1-16	8-15-68
7-AB1-54	8-15-68
7-AB1-53 & 55	7-22-68
7-AB3-2	1-3-68
7-AB3-24	8-15-68
7-AB4-17 & 17.2	8-15-68
SA-124	8-1-68

PAINT
LACLEDE ELECTROCOAT
RED NO. 10001

TRUSS DESIGNATION	TOP CHORD TWO ANGLES				BOTTOM CHORD TWO ANGLES				MAIN WEB "W"					FILLER		"M" C/C HOLES	CHORD PLATE (1)				CONNECTION FILLER			CHANNEL PLATES					REINFORCING ANGLES				
	MK.	TYPE STEEL	CHORD SIZE	LENGTH	MK.	TYPE STEEL	CHORD SIZE	LENGTH	MK.	TYPE STEEL	DIA.	LENGTH	NO. OF K	NO.	DIA.		MK.	TYPE STEEL	SIZE	LENGTH	NO.	DIA.	LENGTH	MK	TYPE STEEL	PCS.	SIZE	LENGTH	MK.	TYPE STEEL	PCS.	SIZE	LENGTH
24T15AL-599	6	A242	2"x1 1/2"x.37"	59'-5"	7	A36	3"x2"x.37"	47'-8"	3	A242	1.14"	[illegible]	11K @ 3'-4" = 36'-8"	12	1.14	59'-3 3/4"	CP15	A36	[illegible]	41'-2"	4	1.14	3"	P8	A36	3	[illegible]	5 1/2"	RA1	A36	2	3"x2"x.37"	7 1/2"
									3A	A242	1.14"	[illegible]	[illegible]																				
									3B	A242	1.14"	10'-7 5/8"	1 3/4K @ 3'-4" = 5'-9"																				

COLUMN END

Es END	TRUSS DESIGNATION	BEARING ANGLES					WE	DOUBLE STRUT				CHORD PLATE				END STIFFENER MK. V8			END STIFFENER MK. V9			END STIFFENER MK. V10			CHANNEL (SEE NOTE #2)			
		MK.	TYPE STEEL	CHORD SIZE	PCS.	LENGTH		MK.	TYPE STEEL	DIA.	LENGTH (2 REQ'D)	MK.	TYPE STEEL	SIZE	LENGTH	TYPE STEEL	DIA.	LENGTH	TYPE STEEL	DIA.	LENGTH	TYPE STEEL	DIA.	LENGTH	MK.	TYPE STEEL	CHANNEL SIZE	LENGTH
	24T15AL-599	9	A242	2"x1 1/2"x.25"	2	9'-5"	5'-4 1/4"	DS	A242	1.14	2'-6 3/4"	—	—	—	—	A242	1.14	10 1/2"	A242	1.14	8'-3 7/8"	—	—	—	CH1L	A36	10[30	10'-0"
		9A	A242	[illegible]	1	[illegible]																			CH1R	A36	10[30	10'-0"

CHECK DIMENSION FOR TRUSS FAB.

LOCATION OF TRANS. TRUSS				
CL-1	CL-2	CL-3	CL-4	Fs
9'-6 1/2"	22'-10 1/2"	36'-2 1/2"	49'-6 1/2"	7'-4 1/4"

CORE END

EL END	TRUSS DESIGNATION	BEARING ANGLES				WEV	DIAGONAL "TV" STRUT				VERTICAL "STV" STRUT				END STIFFENER MK. V1			END STIFFENER MK. V2			END STIFFENER MK. V4			DOUBLE STRUT				DOUBLE STRUT				DOUBLE STRUT			
		MK.	TYPE STEEL	CHORD SIZE	LENGTH		MK.	TYPE STEEL	DIA.	LENGTH	MK.	TYPE STEEL	DIA.	LENGTH	TYPE STEEL	DIA.	LENGTH	TYPE STEEL	DIA.	LENGTH	TYPE STEEL	DIA.	LENGTH	MK.	TYPE STEEL	DIA.	LENGTH	MK.	TYPE STEEL	DIA.	LENGTH (2 REQ'D)	MK.	TYPE STEEL	DIA.	LENGTH
	24T15AL-599	9V	A242	2"x1 1/2"x.25"	1'-7"	5'-1 1/4"	10	A242	1.14	5'-4 7/8"	5	A242	1.14	2'-4 3/4"	A242	1.14	4 3/8"	—	—	—	A242	1.14	2'-2 1/2"	DS10	A242	.75	5'-4 7/8"	DS3A	A242	.75	2'-6 3/4"	—	—	—	—

FLOOR TRUSS DETAILS
FOR
WORLD TRADE CENTER - N.Y.C.
FOR
THE PORT OF NEW YORK AUTHORITY

FLOOR TRUSS C32T15AL x 59'-9" LONG (SEE NOTE #2)
WORLD TRADE CENTER TOWERS A & B

FABRICATION BY: LACLEDE STEEL COMPANY			
FABRICATED AT MADISON, ILLINOIS		DESIGN DRAWING NO. 7-AB1-14	PLATE
APPROVED FOR FABRICATION BY: FOR P.O.N.Y.A.	DATE 11/7/68	DRAWN BY: gdc DATE OCT. 1, 1968	
APPROVED FOR FABRICATION BY: FOR FABRICATOR	DATE	CHECKED BY: T.M. CHURA DATE OCT. 1, 1968	IN CHARGE OF PROD. DEV.
DETAILED BY: A. CARL WEBER		FABRICATION CONT. NO. W.T.C. 221	SHEET NO. ST 215AL

FABRICATION REQUIREMENTS		
	DESIGN	TOLERANCE
CAMBER AT MIDSPAN	0"	+ 3 / 8"
DESIGN DEPTH	24"	± 1 / 4"
PANEL "K"	3'-4"	± 1 / 4"
WEB DEPTH	23 7/8"	± 1 / 4"
OVERALL LENGTH	19'-11"	± 3 / 8"

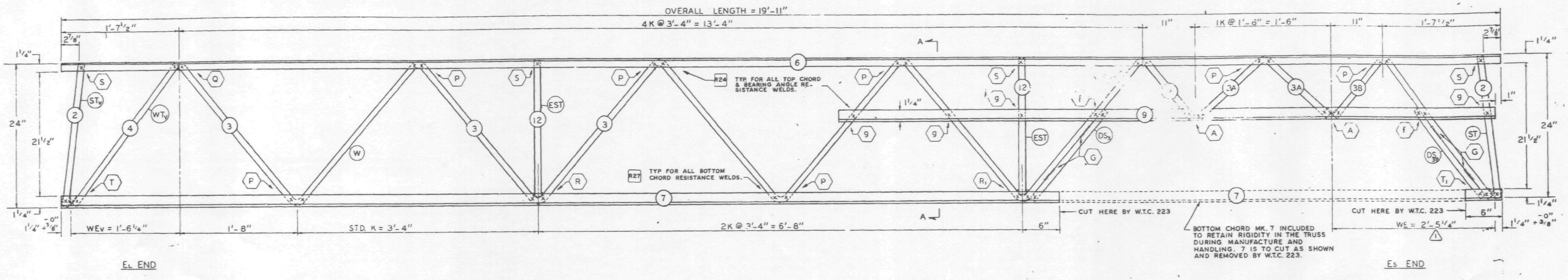

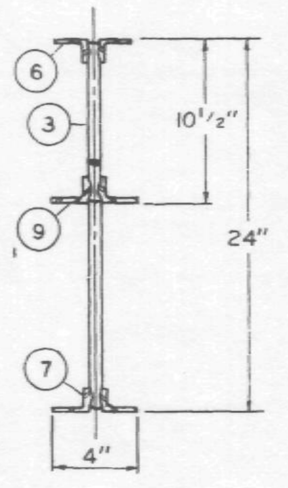

SECTION A-A

1	5-15-69	AS NOTED	G.D.C.
NO.	DATE	REVISION	BY

ALL PANEL POINTS RESISTANCE WELDED. (X).
ARC WELDS INDICATED AT SHADED AREAS AND AT BOTTOM CHORD WEB SPLICES. (IIIIIII).
LETTERS IN HEXAGON INDICATE WELD DETAIL. ie., (A).
ALL WELD DETAILS SHOWN ON SHEET ST 290, ST 291 & ST 293.
LETTERS & NUMBERS IN SQUARES INDICATE RESISTANCE WELD STRENGTH IDENTIFIED IN THE QUALITY CONTROL PROGRAM. ie., R27.

PAINT

LACLEDE ELECTROCOAT
RED NO. 10001

TRUSS DESIGNATION	TOP CHORD TWO ANGLES				BOTTOM CHORD TWO ANGLES				MAIN WEB "W"					TRUSS DATA		VERTICAL "EST" STRUT					CHORD PLATE				DOUBLE STRUT			
	MK.	TYPE STEEL	CHORD SIZE	LENGTH	MK.	TYPE STEEL	CHORD SIZE	LENGTH	MK.	TYPE STEEL	DIA.	LENGTH	NO. OF K			MK.	TYPE STEEL	PCS.	DIA.	LENGTH	MK.	TYPE STEEL	SIZE	LENGTH	MK.	TYPE STEEL	DIA.	LENGTH
24T16A - 1911	6	A242	1 1/2"x1 1/4"x.275"	19'-11"	7	A242	1 1/2"x1 1/4"x.23"	19'-11"	3	A242	.98	21'-8 3/8"	4 1/8K @ 3'-4" = 14'-3"			12	A242	2	.98	1'-10 7/8"	—	—	—	—	DS_3	A242	.98	1'-6 3/4"
									3A	A242	.98	2'-4 3/4"	1K @ 1'-6" = 1'-6"															
									3B	A242	.98	3'-8 1/4"	5/8K @ 3'-4" = 2'-6 1/2"															

Es END	TRUSS DESIGNATION	INCLINED "ST" STRUT				WE	BEARING ANGLES				DOUBLE STRUT			
		MK.	TYPE STEEL	DIA.	LENGTH	1	MK.	TYPE STEEL	CHORD SIZE	LENGTH	MK.	TYPE STEEL	DIA.	LENGTH
	24T16A - 1911	2	A242	.98	1'-11 3/4"	2'-5 1/4"	9	A242	1 1/2"x1 1/4"x.275"	9'-1 1/2"	DS_{3B}	A242	.98	1'-6 3/4"

EL END	TRUSS DESIGNATION	INCLINED "STv" STRUT				WE_v	WEB "WT_v"			
		MK.	TYPE STEEL	DIA.	LENGTH		MK.	TYPE STEEL	DIA.	LENGTH
	24T16A - 1911	2	A242	.98	1'-11 3/4"	1'-6 1/4"	4	A242	.98	2'-5 1/2"

REF. DRWGS.

7-AB2-14	10-4-68
7-AB3-30	10-4-68
7-AB3-31	10-4-68
7-AB3-24	8-15-68
7-AB4-17.7	10-4-68
7-AB4-17.1	10-4-68
SA-124	1-6-68
7-AB2-1	1-6-68

BRIDGING TRUSS DETAILS
FOR
WORLD TRADE CENTER - N.Y.C.
FOR
THE PORT OF NEW YORK AUTHORITY

BRIDGING TRUSS 24T16A x 19'-11" LONG
WORLD TRADE CENTER TOWERS A & B

FABRICATION BY LACLEDE STEEL COMPANY

FABRICATED AT MADISON, ILLINOIS		DESIGN DRAWING NO. 7-AB2-14	PLATE
APPROVED FOR FABRICATION BY James White FOR P.O.N.Y.A.	DATE 6/4/69	DRAWN BY: gdc DATE, APRIL 14, 1969	
APPROVED FOR FABRICATION BY: FOR FABRICATOR	DATE	CHECKED BY: T.M. CHURA DATE APRIL 14, 1969	IN CHARGE OF PROD. DEV.
[redacted] DETAILED BY: A. CARL WEBER		FABRICATION CONT. NO. W.T.C. 221	SHEET NO. BT 216 A

FABRICATION REQUIREMENTS		
	DESIGN	TOLERANCE
CAMBER AT MIDSPAN	0"	+ 3 / 8"
DESIGN DEPTH	24"	± 1 / 4"
PANEL "K"	3'-4"	± 1 / 4"
WEB DEPTH	23 7/8"	± 1 / 4"
OVERALL LENGTH	19'-11"	± 3 / 8"

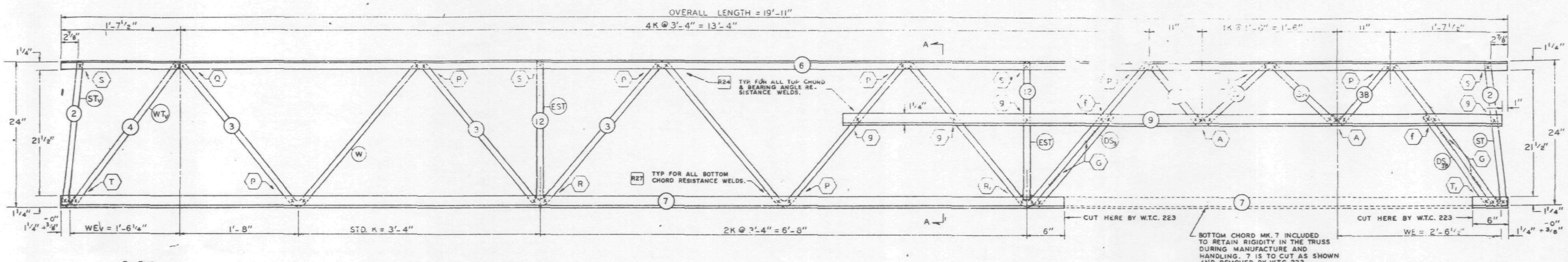

EL END

Es END

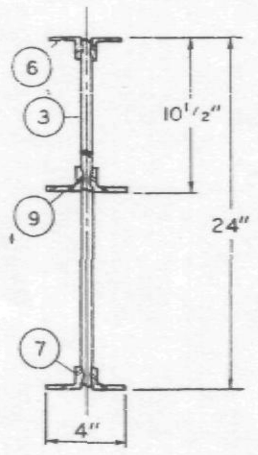

SECTION A-A

NO.	DATE	REVISION	BY

ALL PANEL POINTS RESISTANCE WELDED. (X).
ARC WELDS INDICATED AT SHADED AREAS
AND AT BOTTOM CHORD WEB SPLICES. (IIIIIII).
LETTERS IN HEXAGON INDICATE WELD DETAIL. ie., ⟨A⟩.
ALL WELD DETAILS SHOWN ON SHEET ST 290, ST 291 & ST 293.
LETTERS & NUMBERS IN SQUARES INDICATE RESISTANCE WELD STRENGTH IDENTIFIED IN THE QUALITY CONTROL PROGRAM. ie., [R27].

PAINT
LACLEDE ELECTROCOAT
RED NO. 10001

VOID

TRUSS DESIGNATION	TOP CHORD TWO ANGLES				BOTTOM CHORD TWO ANGLES				MAIN WEB "W"					TRUSS DATA		VERTICAL "EST" STRUT					CHORD PLATE				DOUBLE STRUT			
	MK.	TYPE STEEL	CHORD SIZE	LENGTH	MK.	TYPE STEEL	CHORD SIZE	LENGTH	MK.	TYPE STEEL	DIA.	LENGTH	NO. OF K			MK.	TYPE STEEL	PCS.	DIA.	LENGTH	MK.	TYPE STEEL	SIZE	LENGTH	MK.	TYPE STEEL	DIA.	LENGTH
24T16A - 1911	6	A242	1 1/2"x1 1/4"x.275"	19'-11"	7	A242	1 1/2"x1 1/4"x.23"	19'-11"	3	A242	.98	21'-8 3/8"	4 1/8K @ 3'-4"=14'-3"			12	A242	2	.98	1'-10 7/8"	—	—	—	—	DS_3	A242	.98	1'-6 3/4"
									3A	A242	.98	2'-4 3/4"	1K @ 1'-6" = 1'-6"															
									3B	A242	.98	3'-8 1/4"	5/9K @ 3'-4" = 2'-6 1/2"															

Es END	TRUSS DESIGNATION	INCLINED "ST" STRUT				WE	BEARING ANGLES				DOUBLE STRUT			
		MK.	TYPE STEEL	DIA.	LENGTH		MK.	TYPE STEEL	CHORD SIZE	LENGTH	MK.	TYPE STEEL	DIA.	LENGTH
	24T16A - 1911	2	A242	.98	1'-11 3/4"	2'-6 1/2"	9	A242	1 1/2"x1 1/4"x.275"	9'-1 1/2"	DS_{3B}	A242	.98	1'-6 3/4"

EL END	TRUSS DESIGNATION	INCLINED "STv" STRUT				WEv	WEB "WTv"			
		MK.	TYPE STEEL	DIA.	LENGTH		MK.	TYPE STEEL	DIA.	LENGTH
	24T16A - 1911	2	A242	.98	1'-11 3/4"	1'-6 1/4"	4	A242	.98	2'-5 1/2"

REF. DRWGS.

7-AB2-14	10-4-68
7-AB3-30	10-4-68
7-AB3-31	10-4-68
7-AB3-24	8-15-68
7-AB4-17.7	10-4-68
7-AB4-17.1	10-4-68
SA-124	1-6-69
7-AB2-1	1-6-69

BRIDGING TRUSS DETAILS
FOR
WORLD TRADE CENTER - N.Y.C.
FOR
THE PORT OF NEW YORK AUTHORITY

BRIDGING TRUSS 24T16A x 19'-11" LONG
WORLD TRADE CENTER TOWERS A & B

FABRICATION BY: LACLEDE STEEL COMPANY

FABRICATED AT MADISON, ILLINOIS		DESIGN DRAWING NO. 7-AB2-14	PLATE
APPROVED FOR FABRICATION FOR P.O.N.Y.A. BY	DATE	DRAWN BY: gdc DATE APRIL 14, 1969	
APPROVED FOR FABRICATION FOR FABRICATOR BY	DATE	CHECKED BY: T.M. CHURA DATE APRIL 14, 1969	IN CHARGE OF PROD. DEV.
DETAILED BY: CARL WEBER — LACLEDE STEEL CO.		FABRICATION CONT. NO. W.T.C. 221	SHEET NO. BT 216 A

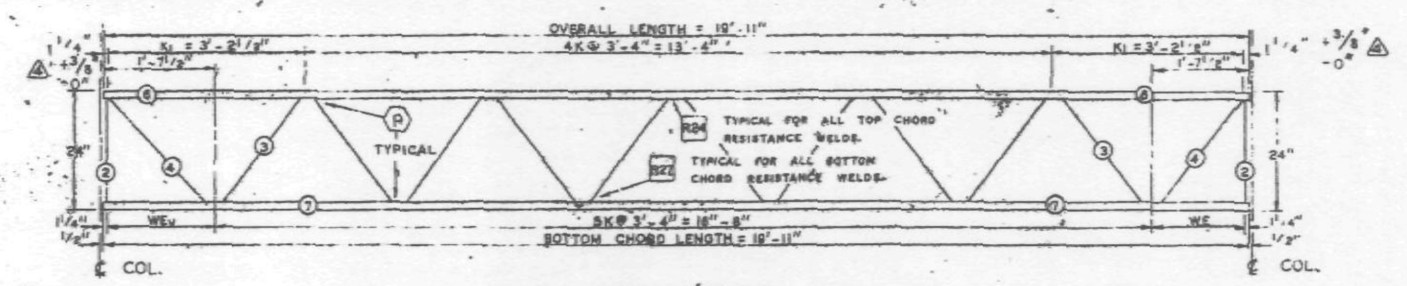

Ew END   TRUSS ELEVATION   Es END

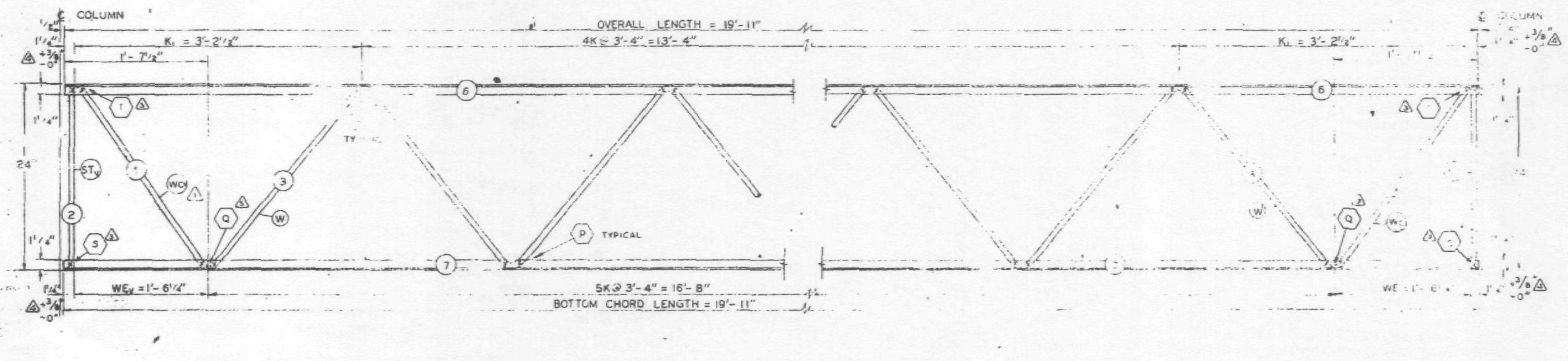

Ew END ELEVATION   Es END ELEVATION

FABRICATION REQUIREMENTS		
	DESIGN	TOLERANCE
CAMBER AT MIDSPAN	0"	± 3/8"
DESIGN DEPTH	24"	± 1/4"
PANEL "K"	3'-4"	± 1/4"
PANEL "K_1"	3'-2 1/2"	± 1/4"
WEB DEPTH	23 1/8"	± 1/4"
OVERALL LENGTH	19'-11"	± 3/8"

ALL PANEL POINTS RESISTANCE WELDED (x). ARC WELDS INDICATED AT SHADED AREAS AND AT BOTTOM CHORD WEB SPLICES. ALL WELD DETAILS SHOWN ON SHEETS ST 290 ...

LETTERS IN HEXAGONS INDICATE WELD DETAILS, ie. (A). LETTERS AND NUMBERS IN SQUARES INDICATE RESISTANCE WELD STRENGTH IDENTIFIED IN THE QUALITY CONTROL PROGRAM, ie. R24

REF. DWGS.

7-AB2-1	4-1-68
7-AB2-10	4-15-68
7-AB3-11	6-10-68
7-AB4-16 & 18	5-6-68
7-AB4-28 & 41	1-3-68
7-AB4-36	4-1-68

PAINT
LACLEDE ...
RED NO. ...

TRUSS DESIGNATION	TOP CHORD TWO ANGLES				BOTTOM CHORD TWO ANGLES				MAIN WEB "W"					VERTICAL "EST" STRUT					TRUSS DATA		FILLER	
	MK.	TYPE STEEL	CHORD SIZE	LENGTH	MK.	TYPE STEEL	CHORD SIZE	LENGTH	MK.	TYPE STEEL	DIA.	LENGTH	NO. OF K	MK.	TYPE STEEL	DIA.	LENGTH	NUMBER REQUIRED			NO.	DIA.
24T16 - 1911	6	A242	1 1/2" x 1 1/4" x .275	19'-11"	7	A242	1 1/2" x 1 1/4" x .23	19'-11"	3	A242	.98	28'-7 1/2"	5K@ 3'-4" = 16'-8"	—	—	—	—	—			—	—

Es END	TRUSS DESIGNATION	WE	VERTICAL "ST" STRUT				WEB "Wc"				
			MK.	TYPE STEEL	DIA.	LENGTH	MK.	TYPE STEEL	PCS.	DIA.	LENGTH
	24T16 - 1911	1'-6 1/4"	2	A242	.98	1'-11 3/4"	4	A242	1	.98	2'-5 1/8"

Ew END	TRUSS DESIGNATION	BEARING ANGLES				WEv	DIAGONAL "T" STRUT				VERTICAL "ST" STRUT				END STIFFENER						WEB "Wc"				
															MK. VS			MK. VS							
		MK.	TYPE STEEL	CHORD SIZE	LENGTH		MK.	TYPE STEEL	DIA.	LENGTH	MK.	TYPE STEEL	DIA.	LENGTH	TYPE STEEL	DIA.	LENGTH	TYPE STEEL	DIA.	LENGTH	MK.	TYPE STEEL	PCS.	DIA.	LENGTH
	24T16 - 1911	—	—	—	—	1'-6 1/4"	—	—	—	—	2	A242	.98	1'-11 3/4"	—	—	—	—	—	—	4	A242	1	.98	2'-5 1/8"

NO.	DATE	REVISION	BY
4	9-6-68	END DIST. (2)	T.M.C.
3	7-8-68	AS NOTED	T.M.C.
2	7-3-68	MAIN WEB	T.M.C.
1	6-28-68	REF. DRWG. Wcv	T.M.C.

BRIDGING TRUSS DETAILS
FOR
WORLD TRADE CENTER - N.Y.C.
FOR
THE PORT OF NEW YORK AUTHORITY

BRIDGING TRUSS 24T16 x 19'-11" LONG
WORLD TRADE CENTER TOWERS A-B

FABRICATION BY LACLEDE STEEL COMPANY
FABRICATED AT MADISON, ILLINOIS
DESIGN DRAWING NO. 7-AB2-10 PLATE
APPROVED FOR FABRICATION FOR P.O.N.Y.A. DATE 9/10/68
DRAWN BY: ... DATE: MAY 24, 1968
APPROVED FOR FABRICATION BY ... FOR FABRICATOR DATE
CHECKED BY: T.M.CHURA DATE: MAY 24, 1968
IN CHARGE OF: PROD. DEV.
DETAILED BY ... WEBER
FABRICATION CONT. NO. WTC 221
SHEET NO. BT210

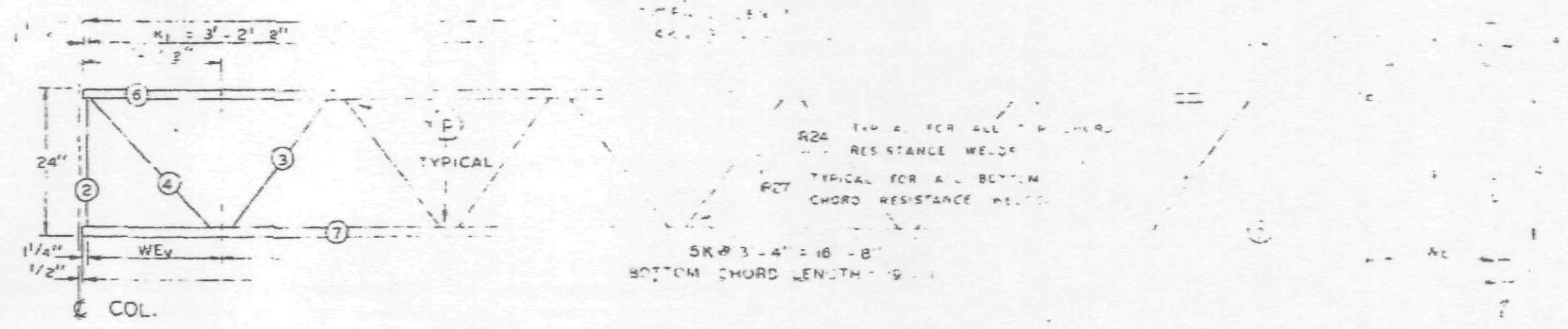

EL END

EL END ELEVATION

ES END ELEVATION

FABRICATION REQUIREMENTS	DESIGN	TOLERANCE
CAMBER AT MIDSPAN	0"	± 3/8"
DESIGN DEPTH	24"	± 1/4"
PANEL "K"	3'-4"	± 1/4"
PANEL "K1"	3'-2½"	± 1/4"
WEB DEPTH	23⅞"	± 1/4"
OVERALL LENGTH	19'-11"	± 3/8"

ALL PANEL POINTS RESISTANCE WELDED (X).
ARC WELDS INDICATED AT SHADED AREAS
AND AT BOTTOM CHORD WEB SPLICES.
ALL WELD DETAILS SHOWN ON SHEETS ST 290
AND ST 291.
LETTERS IN HEXAGONS INDICATE WELD DETAILS, ie., (A).
LETTERS AND NUMBERS IN SQUARES INDICATE RESISTANCE WELD STRENGTH IDENTIFIED IN THE QUALITY CONTROL PROGRAM, ie., R24.

REF. DWGS.

7-AB2-1	4-1-68
7-AB2-10	4-15-68
7-AB3-11	5-10-68
7-AB4-16 & 18	5-6-68
7-AB4-28 & 41	[illegible]-3-68
7-AB4-38	4-1-68

TRUSS DESIGNATION	TOP CHORD TWO ANGLES				BOTTOM CHORD TWO ANGLES				MAIN WEB "W"					VERTICAL "EST" STRUT					TRUSS DATA		FILLER	
	MK.	TYPE STEEL	CHORD SIZE	LENGTH	MK.	TYPE STEEL	CHORD SIZE	LENGTH	MK.	TYPE STEEL	DIA.	LENGTH	NO. OF K	MK.	TYPE STEEL	DIA.	LENGTH	NUMBER REQUIRED			NO.	DIA.
[illegible]	6	A242	1½"x1¼"x.275"	19'-11"	7	A242	1½"x1¼"x.23"	[illegible]	3	A242	.98	25'-7½"	5K@3'-4"=16'-8"	—	—	—	—	—			—	—

Es END	TRUSS DESIGNATION	WE	VERTICAL "ST" STRUT				WEB "Wc"				
			MK.	TYPE STEEL	DIA.	LENGTH	MK.	TYPE STEEL	PCS	DIA	LENGTH
	24T16 - 1911	1'-6¼"	2	A242	.98	1'-11¾"	4	A242	1	.98	2'-5½"

EL END	TRUSS DESIGNATION	BEARING ANGLES				WEV	DIAGONAL "T" STRUT				VERTICAL "STV" STRUT				END STIFFENER MK. V5			END STIFFENER MK. V6			WEB "WcV"				
		MK.	TYPE STEEL	CHORD SIZE	LENGTH		MK.	TYPE STEEL	DIA.	LENGTH	MK.	TYPE STEEL	DIA.	LENGTH	TYPE STEEL	DIA.	LENGTH	TYPE STEEL	DIA.	LENGTH	MK.	TYPE STEEL	PCS.	DIA	LENGTH
	24T16 - 1911	—	—	—	—	1'-6¼"	—	—	—	—	2	A242	.98	1'-11¾"	—	—	—	—	—	—	4	A242	1	.98	2'-5½"

NO	DATE	REVISION	BY
3	7-8-68	AS NOTED	T.M.C.
2	7-3-68	MAIN WEB	T.M.C.
1	6-26-68	REF. DRWG. WCV	T.M.C.

BRIDGING TRUSS DETAILS
FOR
WORLD TRADE CENTER - N.Y.C.
FOR
THE PORT OF NEW YORK AUTHORITY

BRIDGING [illegible] 24T16 x [illegible] LONG
WORLD TRADE CENTER TOWERS A-B

FABRICATED BY LACLEDE STEEL COMPANY
FABRICATED AT MADISON, ILLINOIS
DESIGN DRAWING NO 7-AB2-10 PLATE
APPROVED FOR FABRICATION BY JW FOR PONYA DATE 7/9/68
DRAWN BY gdc DATE MAY 24 1968
APPROVED FOR FABRICATION BY FABRICATOR DATE
CHECKED BY T.M.CHURA DATE MAY 24, 1968
IN CHARGE OF PROD. DEV.
DETAILED BY A.C. WEBER
FABRICATION CONT NO WTC 221
SHEET NO. BT210

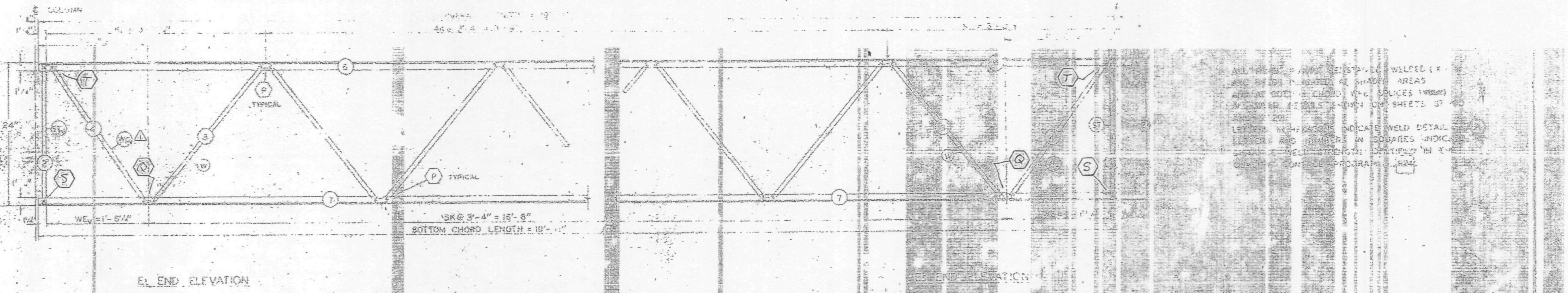

EL END ELEVATION

EL END ELEVATION

TRUSS DESIGNATION	TOP CHORD MK.	TOP CHORD TYPE STEEL	TOP CHORD SIZE	TOP CHORD LENGTH	BOTTOM CHORD (TWO ANGLES) MK.	BOTTOM CHORD TYPE STEEL	BOTTOM CHORD SIZE	BOTTOM CHORD LENGTH	MAIN WEB MK.	MAIN WEB TYPE STEEL	MAIN WEB DIA.	MAIN WEB LENGTH	MAIN WEB NO. OF K	VERTICAL MK.	VERTICAL TYPE STEEL	VERTICAL DIA.	VERTICAL LENGTH	VERTICAL NUMBER REQUIRED	TRUSS DATA	FILLER NO.	FILLER DIA.
24T16 - 191	6	[illegible]	[illegible]	[illegible]-11"	7	A242	[illegible]	[illegible]	3	A242	.98	30'-6½"	5K @ 3'-4" = 16'-8"	—	—	—	—	—		—	—

Es END TRUSS DESIGNATION	WE_s	VERTICAL STRUT MK.	TYPE STEEL	DIA.	LENGTH	WEB MK.	WEB TYPE STEEL	PCS.	DIA.	LENGTH
24T16 - 1911	[illegible]	2	A242	.98	1'-11¾"	4	A242	1	.98	2'-5½"

EL END TRUSS DESIGNATION	BEARING ANGLES MK.	TYPE STEEL	CHORD SIZE	LENGTH	WE_v	DIAGONAL "PT" STRUT MK.	TYPE STEEL	DIA.	LENGTH	VERTICAL "ST" STRUT MK.	TYPE STEEL	DIA.	LENGTH	END STIFFENER TYPE STEEL	DIA.	LENGTH	END STIFFENER TYPE STEEL	DIA.	LENGTH	WEB WC_v MK.	TYPE STEEL	PCS.	DIA.	LENGTH
24T16 - 1911	—	—	—	—	1'-6¼"	—	—	—	—	2	A242	.98	1'-11¾"	—	—	—	—	—	—	4	A242	1	.98	2'-5½"

BRIDGING TRUSS DETAILS

FOR

NEW YORK

A-B

SKILLING - HELLE
CHRISTIANSEN - ROBERTSON
Structural & Civil Engineers
APPROVED
X APPROVED AS NOTED
REVISE
REJECTED
7/5/68 SK

NO.	DATE	REVISION	
1	6-26-68	REF. DRWG. , WCV	T.M.C.

STEEL COMPANY

7-482-11

DRAWN BY
DATE MAY 24 1968
CHECKED BY
DATE MAY 24 1968

LACLEDE STEEL CO.

6

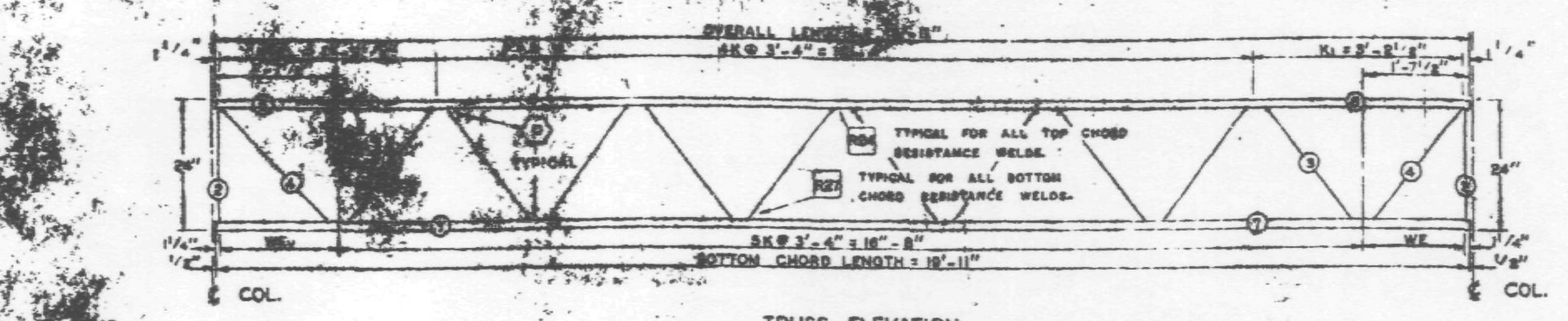

TRUSS ELEVATION

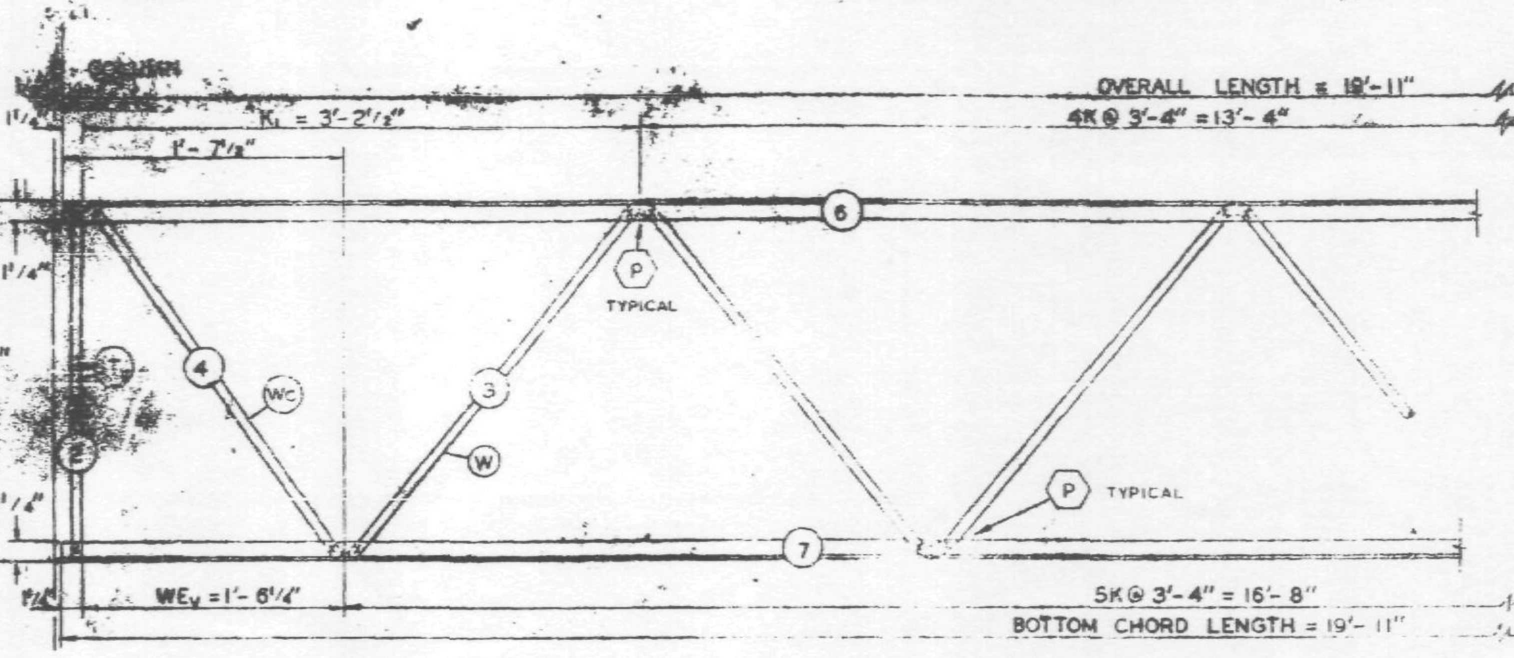

EL END ELEVATION

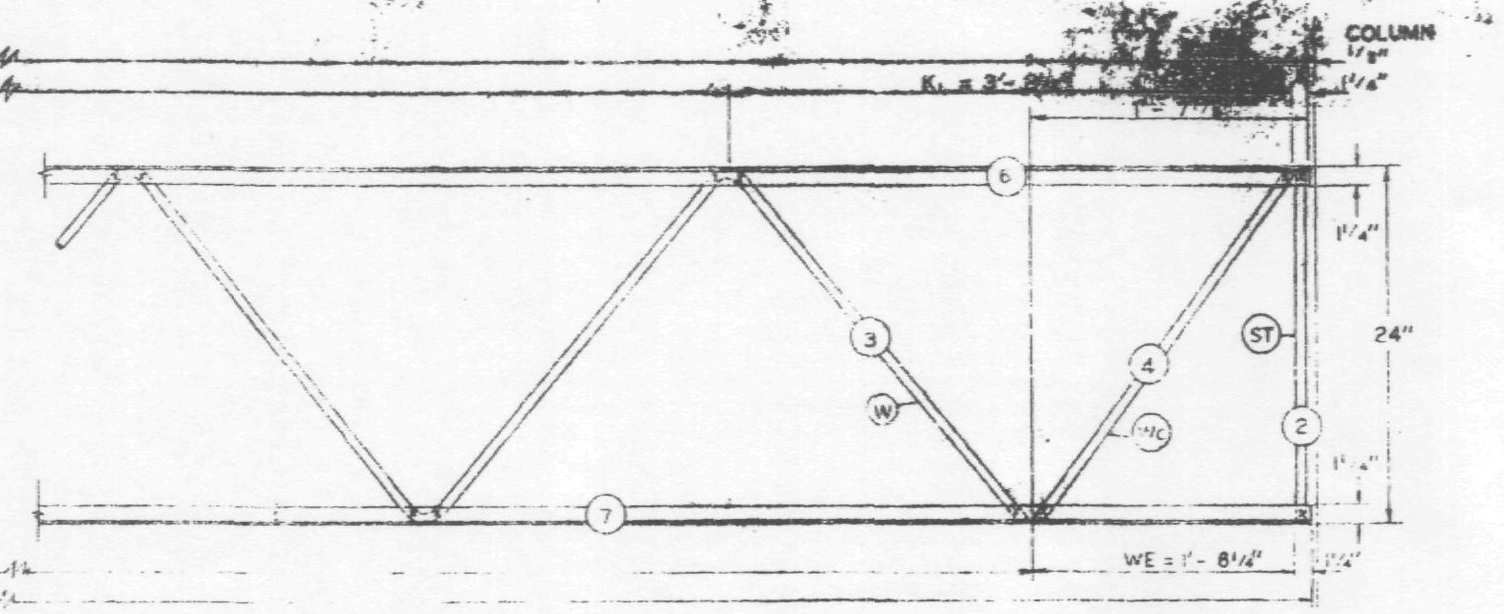

Es END ELEVATION

FABRICATION REQUIREMENTS		
	DESIGN	TOLERANCE
CAMBER AT MIDSPAN	0"	+ 3 8"
DESIGN DEPTH	24"	[illegible]
PANEL "K"	3'-4"	[illegible]
PANEL "K1"	3'-2 1/2"	[illegible]
WEB DEPTH	23 7/8"	[illegible]
OVERALL LENGTH	19'-11"	[illegible]

ALL PANEL POINTS RESISTANCE WELDED (X).
ARC WELDS INDICATED AT SHADED AREAS AND AT BOTTOM CHORD WEB SPLICES.
ALL WELD DETAILS SHOWN ON SHEETS ... AND ST 291.
LETTERS IN HEXAGONS INDICATE WELD DETAILS.
LETTERS AND NUMBERS IN SQUARES INDICATE RESISTANCE WELD STRENGTH IDENTIFIED IN THE QUALITY CONTROL PROGRAM. ie. R24

REF. DWGS.
7-AB2-1
7-AB2-11
7-AB3-11
7-AB4-16 & 18
7-AB4-28 & 41
7-AB4-38

PAINT
LACLEDE ELECTROCOAT
RED NO. 10001

TRUSS DESIGNATION	TOP CHORD TWO ANGLES				BOTTOM CHORD TWO ANGLES				MAIN WEB "W"					VERTICAL "EST" STRUT					TRUSS DATA		FILLER	
	MK.	TYPE STEEL	CHORD SIZE	LENGTH	MK.	TYPE STEEL	CHORD SIZE	LENGTH	MK.	TYPE STEEL	DIA.	LENGTH	NO. OF K	MK.	TYPE STEEL	DIA.	LENGTH	NUMBER REQUIRED			NO.	DIA.
24T16 - 1911	6	A242	1 1/2" x 1 1/4" x .275"	19'-11"	7	A242	1 1/2" x 1 1/4" x .23"	19'-11"	3	A242	.98	30'-6 1/2"	5K@ 3'-4" = 16'-8"	—	—	—	—	—			—	—

Es	TRUSS DESIGNATION	WE	VERTICAL "ST" STRUT				WEB "Wc"				
			MK.	TYPE STEEL	DIA.	LENGTH	MK.	TYPE STEEL	PCS.	DIA.	LENGTH
	24T16 - 1911	1'-6 1/4"	2	A242	.98	1'-11 3/4"	4	A242	1	.98	2'-5 1/2"

EL END	TRUSS DESIGNATION	BEARING ANGLES				WEV	DIAGONAL "T" STRUT				VERTICAL "ST1" STRUT				END STIFFENER MK. V5			END STIFFENER MK. V6			WEB "Wc"				
		MK.	TYPE STEEL	CHORD SIZE	LENGTH		MK.	TYPE STEEL	DIA.	LENGTH	MK.	TYPE STEEL	DIA.	LENGTH	TYPE STEEL	DIA.	LENGTH	TYPE STEEL	DIA.	LENGTH	MK.	TYPE STEEL	PCS.	DIA.	LENGTH
	24T16 - 1911	—	—	—	—	1'-6 1/4"	—	—	—	—	2	A242	.98	1'-11 3/4"	—	—	—	—	—	—	4	A242	1	.98	2'-5 1/2"

NO.	DATE	REVISION	BY

BRIDGING TRUSS DETAILS
FOR
WORLD TRADE CENTER - N.Y.C.
FOR
THE PORT OF NEW YORK AUTHORITY

BRIDGING TRUSS 24T16 x 19'-11" LONG
WORLD TRADE CENTER TOWERS A-B

FABRICATION BY: LACLEDE STEEL COMPANY
FABRICATED AT MADISON, ILLINOIS
DESIGN DRAWING NO 7-AB2-11
PLATE
APPROVED FOR FABRICATION BY James White FOR P.O.N.Y.A. DATE 6/6/68
DRAWN BY: a.d.c. DATE MAY 24, 1968
APPROVED FOR FABRICATION BY FOR FABRICATOR DATE
LACLEDE STEEL CO.
CHECKED BY T.M.CHUBA DATE MAY 24, 1968
DETAILED BY A.C. WEBER
FABRICATION CONT. NO. W.T.C. 221
226

FABRICATION REQUIREMENTS

	DESIGN	TOLERANCE
CAMBER AT MIDSPAN	0"	+ 3/8"
DESIGN DEPTH	24"	± 1/4"
PANEL "K"	3'-4"	± 1/4"
PANEL "K₁"	3'-2 1/2"	± 1/4"
WEB DEPTH	22 7/8"	± 1/4"
OVERALL LENGTH	19'-11"	± 3/8"

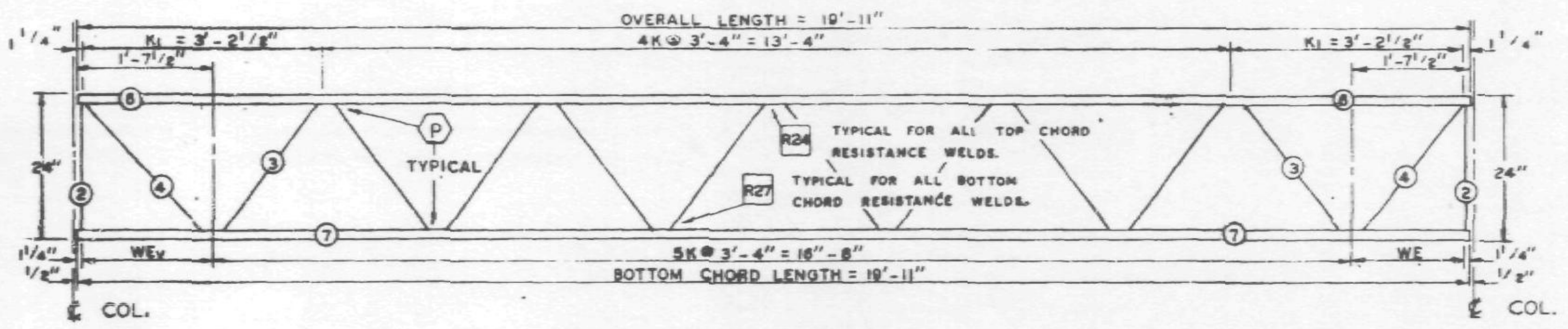

EL END — TRUSS ELEVATION — ES END

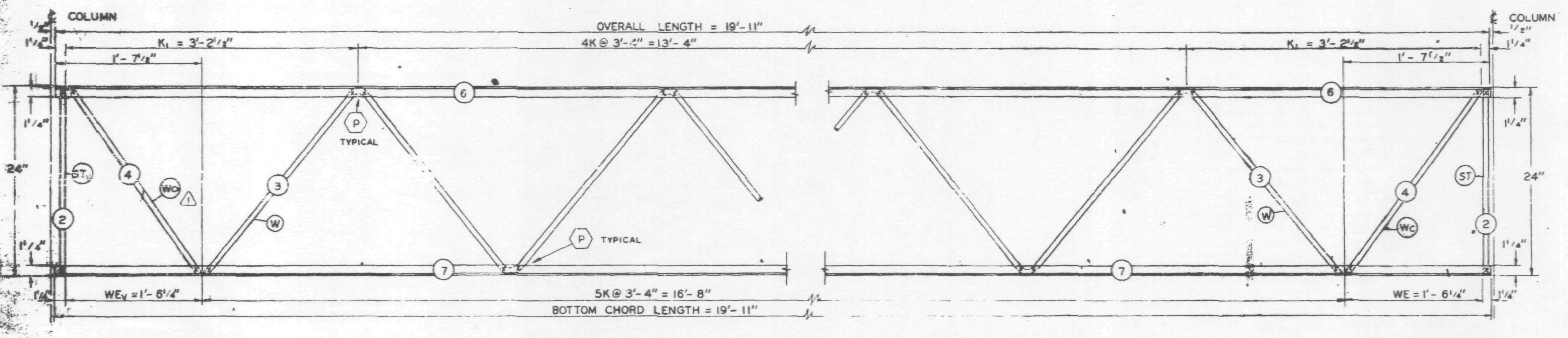

EL END ELEVATION — ES END ELEVATION

ALL PANEL POINTS RESISTANCE WELDED (x).
ARC WELDS INDICATED AT SHADED AREAS
AND AT BOTTOM CHORD WEB SPLICES (▬).
ALL WELD DETAILS SHOWN ON SHEETS ST 290
AND ST 291.
LETTERS IN HEXAGONS INDICATE WELD DETAILS, i.e. (A).
LETTERS AND NUMBERS IN SQUARES INDICATE RESISTANCE WELD STRENGTH IDENTIFIED IN THE QUALITY CONTROL PROGRAM, i.e. R24.

REF. DWGS.

7-AB2-1	4-1-68
7-AB2-10	4-15-68
7-AB3-11	6-10-68 △2
7-AB4-16 & 18	5-6-68 △1
7-AB4-28 & 41	1-3-68
7-AB4-38	4-1-68

PAINT
LACLEDE ELECTROCOAT
RED NO. 1000[illegible]

TRUSS DESIGNATION	TOP CHORD TWO ANGLES				BOTTOM CHORD TWO ANGLES				MAIN WEB "W"					VERTICAL "EST" STRUT					TRUSS DATA		FILLER	
	MK.	TYPE STEEL	CHORD SIZE	LENGTH	MK.	TYPE STEEL	CHORD SIZE	LENGTH	MK.	TYPE STEEL	DIA.	LENGTH	NO. OF K	MK.	TYPE STEEL	DIA.	LENGTH	NUMBER REQUIRED			NO.	DIA.
24T16 - 1911	6	A242	1 1/2" x 1 1/4" x .275	19'-[illegible]	7	A242	1 1/2" x 1 1/4" x .23	19'-11"	3	A242	.98	23'-7 1/2" △2	5K @ 3'-4" = 16'-8"	—	—	—	—	—			—	—

Es	TRUSS DESIGNATION	WE	VERTICAL "ST" STRUT				WEB "Wc"				
			MK.	TYPE STEEL	DIA.	LENGTH	MK.	TYPE STEEL	PCS.	DIA.	LENGTH
	24T16 - 1911	1'-6 1/4"	2	A242	.98	1'-11 3/4"	4	A242	1	.98	2'-5 1/2"

EL END	TRUSS DESIGNATION	BEARING ANGLES				WEv	DIAGONAL "T" STRUT				VERTICAL "STv" STRUT				END STIFFENER MK. V5			END STIFFENER MK. V8			WEB "Wcv" △1				
		MK.	TYPE STEEL	CHORD SIZE	LENGTH		MK.	TYPE STEEL	DIA.	LENGTH	MK.	TYPE STEEL	DIA.	LENGTH	TYPE STEEL	DIA.	LENGTH	TYPE STEEL	DIA.	LENGTH	MK.	TYPE STEEL	PCS.	DIA.	LENGTH
	24T16 - 1911	—	—	—	—	1'-5 3/4"	—	—	—	—	2	A242	.98	1'-11 3/4"	—	—	—	—	—	—	4	A242	1	.98	2'-5 1/2"

△2	7-3-68	MAIN WEB	T.M.C.
△1	6-26-68	REF. DRWG. WCV	T.M.C.
NO.	DATE	REVISION	BY

BRIDGING TRUSS DETAILS
FOR
WORLD TRADE CENTER - N.Y.C.
FOR
THE PORT OF NEW YORK AUTHORITY

BRIDGING TRUSS 24T16 x 19'-11" LONG
WORLD TRADE CENTER TOWERS A-B

FABRICATION BY LACLEDE STEEL COMPANY
FABRICATED AT MADISON, ILLINOIS
DESIGN DRAWING NO. 7-AB2-10 PLATE
APPROVED FOR FABRICATION BY ______ FOR P.O.N.Y.A. DATE
DRAWN BY: gdc DATE: MAY 24, 1968
APPROVED FOR FABRICATION BY ______ FOR FABRICATOR DATE
CHECKED BY: T.M.CHURA DATE: MAY 24, 1968
IN CHARGE OF PROD. DEV.
DETAILED BY A.C. WEBER
FABRICATION CONT. NO. W.T.C. 221
SHEET NO. BT210

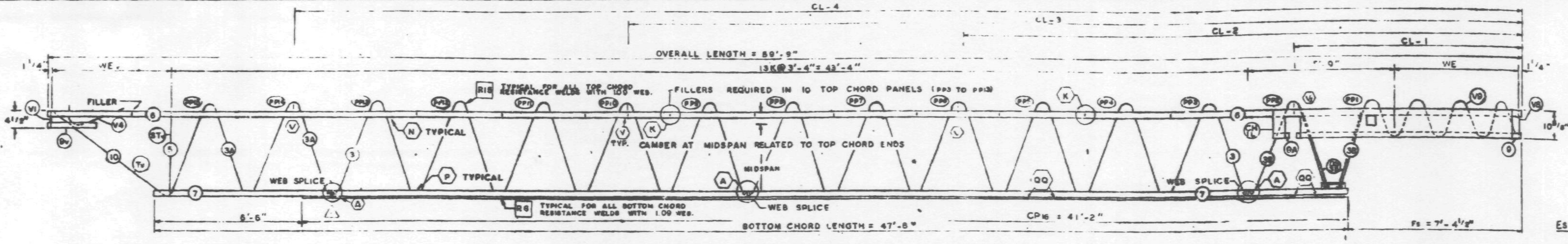

EL END (CORE)

Es END (COLUMN)

TRUSS ELEVATION

FABRICATION REQUIREMENTS		
	DESIGN	TOLERANCE
CAMBER AT MIDSPAN	2 1/16"	± 3/8"
DESIGN DEPTH	29"	± 1/4"
PANEL K	3'-4"	± 1/4"
OVERALL LENGTH	59'-9"	± 3/8"
WEB DEPTH	31 7/8"	± 1/4"

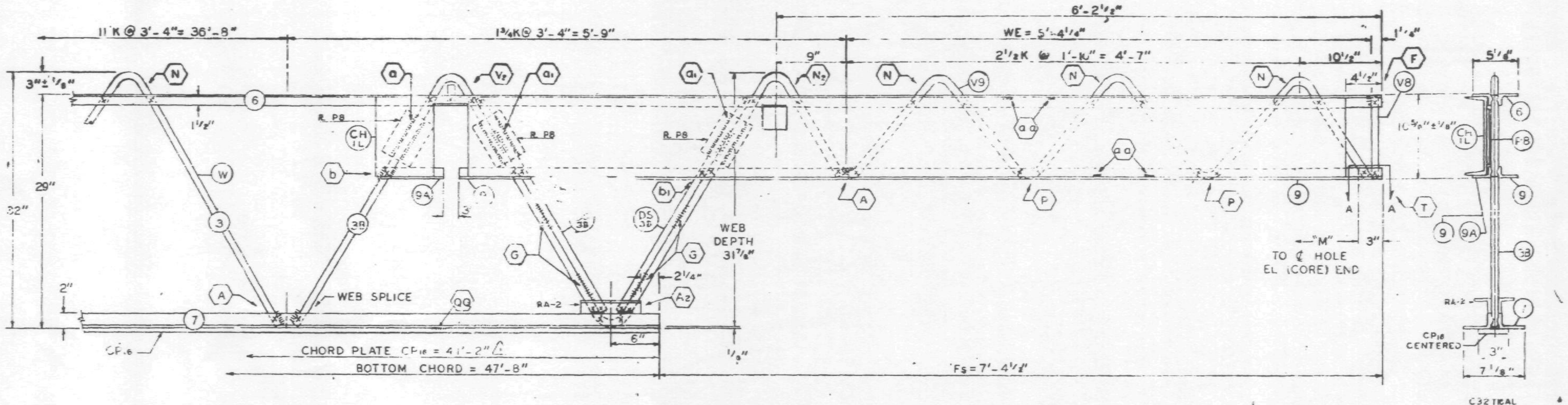

Es END (COLUMN)

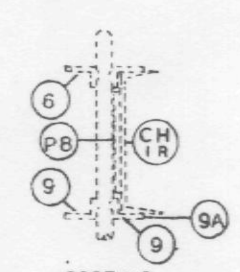

CH1R PLACED AS SHOWN FOR C32T16AR
CH1L PLACED AS SHOWN FOR C32T16AL

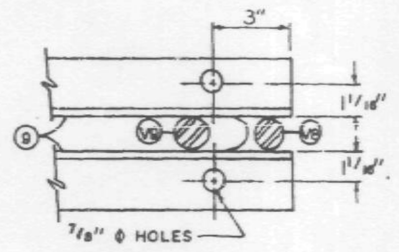

SECTION A-A

ALL PANEL POINTS RESISTANCE WELDED. (x).
ARC WELDS INDICATED AT SHADED AREAS AND AT BOTTOM CHORD WEB SPLICES.
LETTERS IN HEXAGON INDICATE WELD DETAIL, ie., (A).
LETTERS AND NUMBERS IN SQUARES INDICATE RESISTANCE WELD STRENGTH IDENTIFIED IN THE QUALITY CONTROL PROGRAM, ie., [R9].
ALL WELD DETAILS SHOWN ON SHEETS ST290, ST291.

ALL CHANNEL DETAILS SHOWN ON SHEET ST 407.
CHORD PLATE DETAILS SHOWN ON SHEET ST 283.

NOTE 2

ALL DETAILS & ELEVATIONS SHOWN FOR C32T16AL TRUSSES ARE APPLICABLE TO C32T16AR TRUSSES WITH CHANNEL CH1R AND BEARING ANGLE 9A PLACED ON OPP. HAND AS SHOWN.

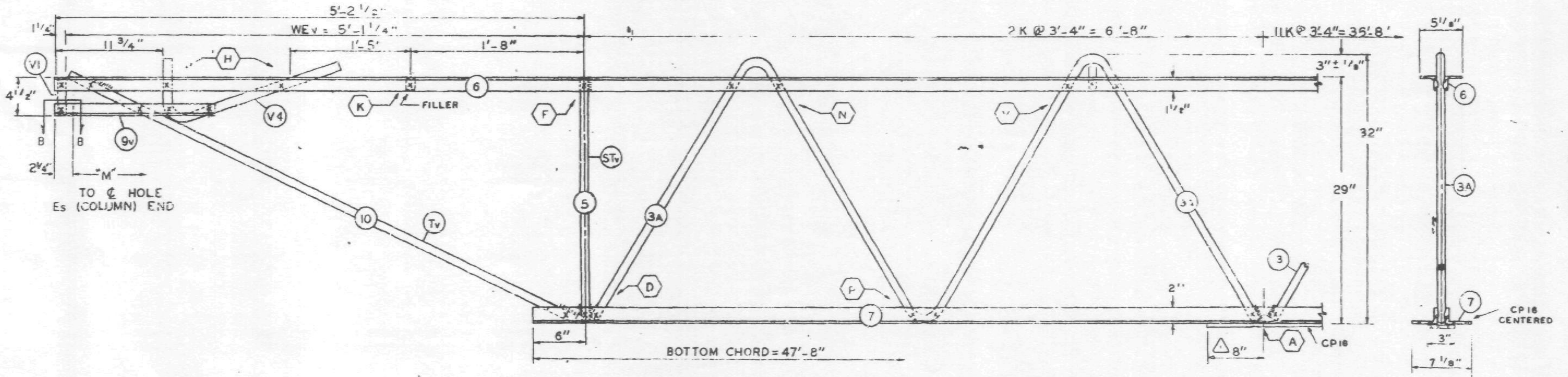

EL END (CORE)

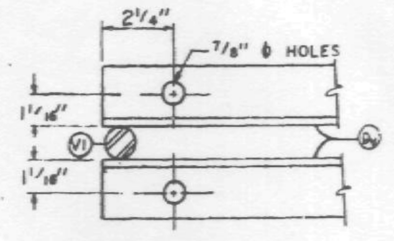

SECTION B-B

NO.	DATE	REVISION	BY
2	11-7-68	AS NOTED	G.D.C.
1	10-31-68	CP16	LWH

2 REF. DRWG.

7-AB1-15	10-4-68
7-AB1-54	10-4-68
7-AB1-53	7-22-68
7-AB3-2	1-3-68
7-AB3-24	8-15-68
7-AB4 17 & 17.2	10-4-68
SA-124	10-11-68
7-AB1-55	10-15-68

PAINT

LACLEDE ELECTROCOAT
RED NO. 10001

TRUSS DESIGNATION	TOP CHORD TWO ANGLES				BOTTOM CHORD TWO ANGLES				MAIN WEB "W"					FILLER		"M" C/C HOLES	CHORD PLATE 1				CONNECTION FILLERS			CHANNEL PLATES					REINFORCING ANGLES (2 REQ'D)				TRUSS DATA
	MK	TYPE STEEL	CHORD SIZE	LENGTH	MK.	TYPE STEEL	CHORD SIZE	LENGTH	MK.	TYPE STEEL	DIA.	LENGTH	NO. OF K	NO.	DIA.		MK.	TYPE STEEL	SIZE	LENGTH	NO	DIA	LENGTH	MK	TYPE STEEL	PCS.	SIZE	LENGTH	MK.	TYPE STEEL	SIZE	LENGTH	
C32T16AL-599	6	A242	2"x1 1/2"x.31	59'-9"	7	A36	3"x2"x.33"	47'-8"	3 3A 3B	A36 A242 A242	1.09 1.14 1.14	68'-6 1/4" 12'-5 1/2" 10'-7 5/8"	11 K @ 3'-4" = 36'-8" 2 K @ 3'-4" = 6'-8" 1 3/4 K @ 3'-4" = 5'-9"	11	1.09"	59'-3 3/4"	CP 16	A36	3"x.25	41'-2"	4	1.09	3"	P8	A36	3	4 1/2"x.39	5 1/2"	RA-2	A36	3"x2"x.33"	7 1/2"	

COLUMN END

Es END	TRUSS DESIGNATION	BEARING ANGLES					WE	DOUBLE STRUT				CHORD PLATE				END STIFFENER MK. V8			END STIFFENER MK. V9			END STIFFENER MK. V10			CHANNEL			
		MK.	TYPE STEEL	CHORD SIZE	PCS.	LENGTH		MK.	TYPE STEEL	DIA.	LENGTH (2 REQ'D)	MK.	TYPE STEEL	SIZE	LENGTH	TYPE STEEL	DIA.	LENGTH	TYPE STEEL	DIA.	LENGTH	TYPE STEEL	DIA.	LENGTH	MK.	TYPE STEEL	CHANNEL SIZE	LENGTH
	C32T16AL-599	9 9A	A242 A242	2"x1 1/2"x.25" 2"x1 1/2"x.25"	2 1	9'-5" 8 1/2"	5'-4 1/4"	DS 3B	A242	1.14	2'-6 3/4"	—	—	—	—	A242	1.14	10 1/2"	A242	1.14	8'-3 7/8"	—	—	—	CH1L CH1R	A36 A36	10 C 30 10 C 30	10'-0" 10'-0"

CHECK DIMENSION FOR TRUSS FAB.

LOCATION OF TRANS. TRUSS				
CL-1	CL-2	CL-3	CL-4	Fs
9'-6 1/2"	22'-10 1/2"	36'-2 1/2"	49'-6 1/2"	7'-4 1/4"

END

EL END	TRUSS DESIGNATION	BEARING ANGLES				WEv	DIAGONAL "Tv" STRUT				VERTICAL "STv" STRUT				END STIFFENER MK. V1			END STIFFENER MK. V2			END STIFFENER MK. V4			DOUBLE STRUT				DOUBLE STRUT			
		MK.	TYPE STEEL	CHORD SIZE	LENGTH		MK.	TYPE STEEL	DIA.	LENGTH	MK.	TYPE STEEL	DIA.	LENGTH	TYPE STEEL	DIA.	LENGTH	TYPE STEEL	DIA.	LENGTH	TYPE STEEL	DIA.	LENGTH	MK.	TYPE STEEL	DIA.	LENGTH	MK.	TYPE STEEL	DIA.	LENGTH
	C32T16AL-599	9v	A242	2"x1 1/2"x.25	1'-7"	5'-1 1/4"	10	A242	1.14	5'-6 1/2"	5	A242	1.14	2'-4 7/8"	A242	1.14	4 3/8"	—	—	—	A242	1.14	2'-2 1/2"	-	—	—	—	—	—	—	—

2

FLOOR TRUSS DETAILS
FOR
WORLD TRADE CENTER - N.Y.C.
FOR
THE PORT OF NEW YORK AUTHORITY

FLOOR TRUSS C32T16AL (SEE NOTE 2) x 59'-9" LONG
WORLD TRADE CENTER TOWERS A & B

FABRICATION BY: LACLEDE STEEL COMPANY			
FABRICATED AT MADISON, ILLINOIS		DESIGN DRAWING NO. 7-AB1-15	PLATE
APPROVED FOR FABRICATION BY: FOR P.O.N.Y.A.	DATE 11/18/68	DRAWN BY: gdc DATE OCT. 8, 1968	
APPROVED FOR FABRICATION BY: FOR FABRICATOR	DATE	CHECKED BY: T.M.CHURA DATE OCT 9 1968	IN CHARGE OF PROD. DEV.
DETAILED BY: A. CARL WEBER		FABRICATION CONT. NO. W.T.C. 221	SHEET NO. ST 216AL

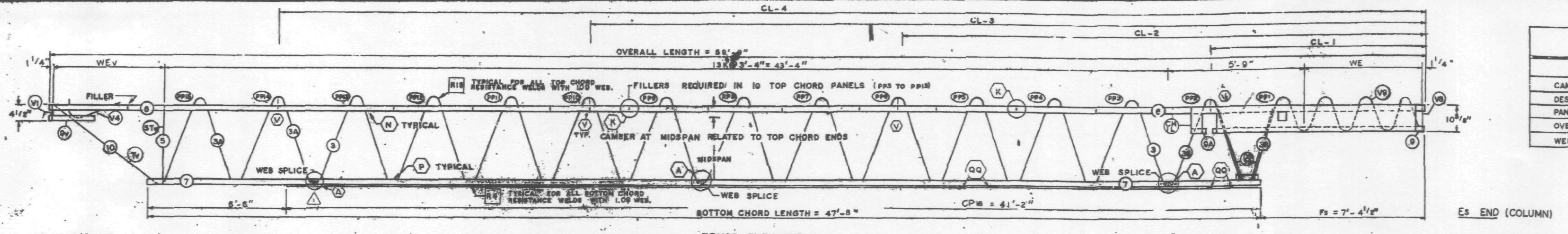

EL END (CORE)

TRUSS ELEVATION

Es END (COLUMN)

FABRICATION REQUIREMENTS		
	DESIGN	TOLERANCE
CAMBER AT MIDSPAN	2 1/16"	± 3/8"
DESIGN DEPTH	29"	± 1/4"
PANEL K	3'-4"	± 1/4"
OVERALL LENGTH	59'-9"	± 3/8"
WEB DEPTH	31 7/8"	± 1/4"

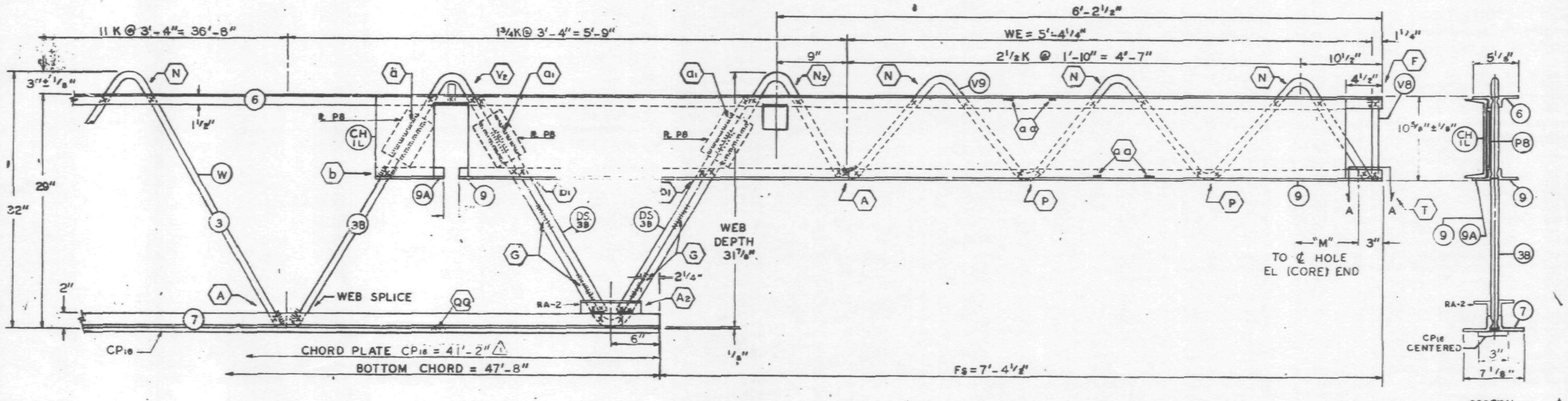

Es END (COLUMN)

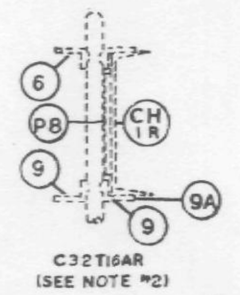

ALL PANEL POINTS RESISTANCE WELDED. (x).
ARC WELDS INDICATED AT SHADED AREAS AND AT BOTTOM CHORD WEB SPLICES.
LETTERS IN HEXAGON INDICATE WELD DETAIL, ie., (A).
LETTERS AND NUMBERS IN SQUARES INDICATE RESISTANCE WELD STRENGTH IDENTIFIED IN THE QUALITY CONTROL PROGRAM, ie., [R9].
ALL WELD DETAILS SHOWN ON SHEETS ST290, ST291.

ALL CHANNEL DETAILS SHOWN ON SHEET ST 407.
CHORD PLATE DETAILS SHOWN ON SHEET ST 283.

NOTE 2

ALL DETAILS & ELEVATIONS SHOWN FOR C32T16AL TRUSSES ARE APPLICABLE TO C32T16AR TRUSSES WITH CHANNEL CH1R AND BEARING ANGLE 9A PLACED ON OPP. HAND AS SHOWN.

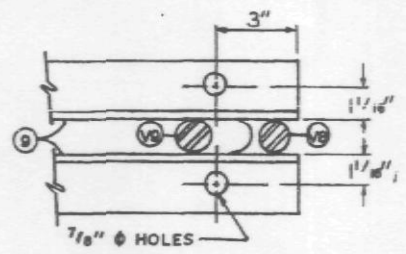

SECTION A-A

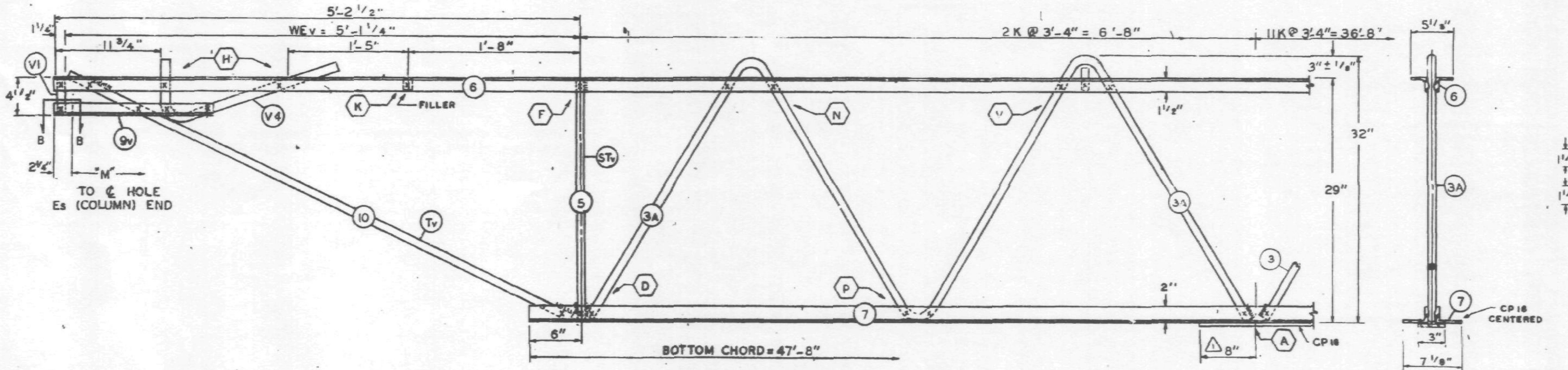

EL END (CORE)

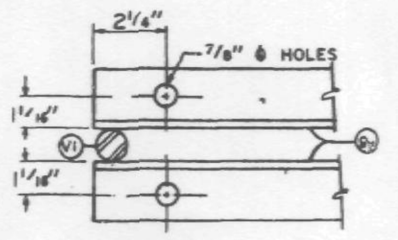

SECTION B-B

NO.	DATE	REVISION	BY
⚠1	10-31-68	CP16	LWH

REF. DRWG.
7-AB1-15 8-15-68
7-AB1-54 8-15-68
7-AB1-53 & 56 7-22-68
7-AB3-2 1-3-68
7-AB3-24 8-15-68
7-AB4-17 & 17.2 8-15-68
SA-124 8-1-68

PAINT
LACLEDE ELECTROCOAT
RED NO. 10001

TRUSS DESIGNATION	TOP CHORD TWO ANGLES				BOTTOM CHORD TWO ANGLES				MAIN WEB "W"					FILLER		"M" C/C HOLES	CHORD PLATE ⚠				CONNECTION FILLERS			CHANNEL PLATES					REINFORCING ANGLES (2 REQ'D)				TRUSS DATA	
	MK.	TYPE STEEL	CHORD SIZE	LENGTH	MK.	TYPE STEEL	CHORD SIZE	LENGTH	MK.	TYPE STEEL	DIA.	LENGTH	NO. OF K	NO.	DIA.		MK.	TYPE STEEL	SIZE	LENGTH	NO	DIA	LENGTH	MK	TYPE STEEL	PCS.	SIZE	LENGTH	MK.	TYPE STEEL	SIZE	LENGTH		
C32T16AL-599	6	A242	2"x1 1/2"x.31	59'-9"	7	A36	3"x2"x.33"	47'-8"	3 3A 3B	A36 A242 A242	1.09 1.14 1.14	[illegible] [illegible] 10'-7 5/8"	11 K @ 3'-4" = 36'-8" 2 K @ 3'-4" = 6'-8" 1 3/4 K @ 3'-4" = 5'-9"	11	1.09"	59'-3 3/4"	CP16	A36	3"x 25	41'-2"	4	1.09	3"	P8	A36	3	4 1/2"x39	5 1/2"	RA-2	A36	3"x 2"x.33"	7 1/2"		

COLUMN END

Es END	TRUSS DESIGNATION	BEARING ANGLES					WE	DOUBLE STRUT				CHORD PLATE				END STIFFENER MK. V8			END STIFFENER MK. V9			END STIFFENER MK. V10			CHANNEL			
		MK.	TYPE STEEL	CHORD SIZE	PCS.	LENGTH		MK.	TYPE STEEL	DIA.	LENGTH (2 REQ'D)	MK.	TYPE STEEL	SIZE	LENGTH	TYPE STEEL	DIA.	LENGTH	TYPE STEEL	DIA.	LENGTH	TYPE STEEL	DIA.	LENGTH	MK.	TYPE STEEL	CHANNEL SIZE	LENGTH
	C32T16AL-599	9 9A	A242 A242	2"x1 1/2"x.25" 2"x1 1/2"x.25"	2 1	9'-5" 8 1/2"	5'-4 1/4	DS 3B	A242	1.14	2'-6 3/4"	—	—	—	—	A242	1.14	10 1/2"	A242	1.14	8'-3 7/8"	—	—	—	CH1L CH1R	A36 A36	10 C 30 10 C 30	10'-0" 10'-0"

CHECK DIMENSION FOR TRUSS FAB.

LOCATION OF TRANS. TRUSS				
CL-1	CL-2	CL-3	CL-4	Fs
9'-6 1/2"	22'-10 1/2"	36'-2 1/2"	49'-6 1/2"	7'-4 1/2"

CORE END

EL END	TRUSS DESIGNATION	BEARING ANGLES				WEv	DIAGONAL "Tv" STRUT				VERTICAL "STv" STRUT				END STIFFENER MK. V1			END STIFFENER MK. V2			END STIFFENER MK. V4			DOUBLE STRUT				DOUBLE STRUT			
		MK.	TYPE STEEL	CHORD SIZE	LENGTH		MK.	TYPE STEEL	DIA.	LENGTH	MK.	TYPE STEEL	DIA.	LENGTH	TYPE STEEL	DIA.	LENGTH	TYPE STEEL	DIA.	LENGTH	TYPE STEEL	DIA.	LENGTH	MK.	TYPE STEEL	DIA.	LENGTH	MK.	TYPE STEEL	DIA.	LENGTH
	C32T16AL-599	9v	A242	2"x1 1/2"x 25	1'-7"	5'-1 1/4"	10	A242	1.14	5'-6 1/2"	5	A242	1.14	2'-4 3/4"	A242	1.14	4 3/8"	—	—	—	A242	1.14	2'-2 1/2"	-	—	—	—	—	—	—	—

FLOOR TRUSS DETAILS
FOR
WORLD TRADE CENTER - N.Y.C.
FOR
THE PORT OF NEW YORK AUTHORITY

FLOOR TRUSS C32T16AL (SEE NOTE 2) x 59'-9" LONG
WORLD TRADE CENTER TOWERS A & B

FABRICATION BY: LACLEDE STEEL COMPANY

FABRICATED AT MADISON, ILLINOIS		DESIGN DRAWING NO. 7-AB1-15	PLATE
APPROVED FOR FABRICATION BY: James White FOR P.O.N.Y.A.	DATE 11/7/68	DRAWN BY: gdc DATE OCT. 8, 1968	
APPROVED FOR FABRICATION BY: FOR FABRICATOR	DATE	CHECKED BY: T.M.CHURA DATE OCT. 9, 1968	IN CHARGE OF PROD. DEV.
DETAILED BY: A. CARL WEBER		FABRICATION CONT. NO. W.T.C. 221	SHEET NO. ST 216AL

FABRICATION REQUIREMENTS	DESIGN	TOLERANCE
CAMBER AT MIDSPAN	0"	+ 3 / 8"
DESIGN DEPTH	24"	± 1 / 4"
PANEL K	3'-4"	± 1 / 4"
WEB DEPTH	23 7/8"	± 1 / 4"
OVERALL LENGTH	19'-11"	± 3 / 8"

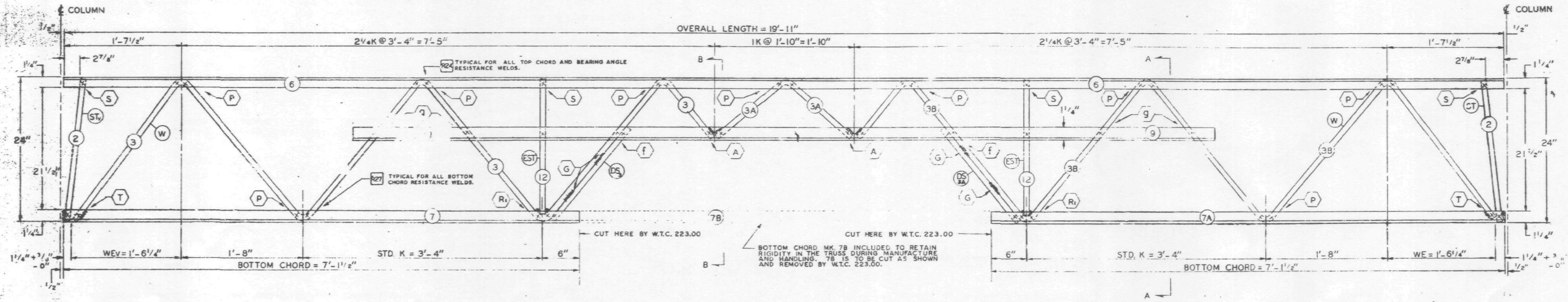

EL END

TRUSS ELEVATION

ES END

ALL PANEL POINTS RESISTANCE WELDED. (X).
ARC WELDS INDICATED AT SHADED AREAS
AND AT BOTTOM CHORD WEB SPLICES.
LETTERS IN HEXAGON INDICATE WELD DETAIL. ie., (A).
ALL WELD DETAILS SHOWN ON SHEET ST 290, ST291 & ST293.
LETTERS & NUMBERS IN SQUARES INDICATE RE-
SISTANCE WELD STRENGTH IDENTIFIED IN THE
QUALITY CONTROL PROGRAM. ie., R27.

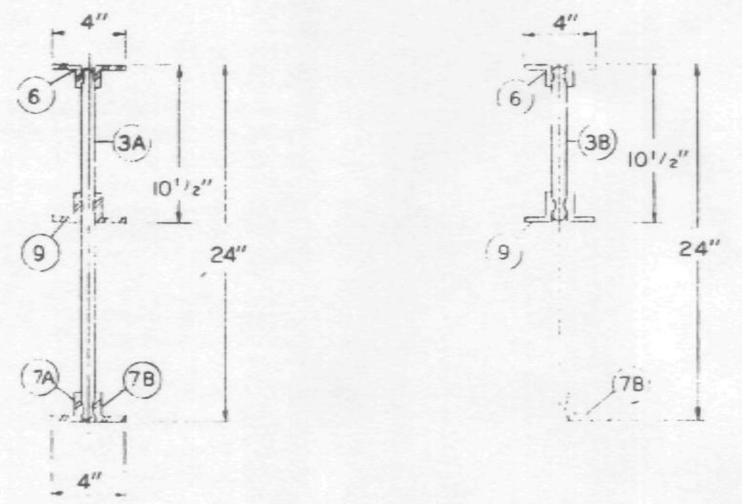

SECTION A-A

SECTION B-B

REF. DRWG.	
7-A82-1	10-4-68
7-A82-17	10-4-68
7-A84-22	7
7-A84-28	7-.
7-A84-28.1	7-.
SA-124	10-11

PAINT
LACLEDE ELECTROCOAT
RED NO. 10001

TRUSS DESIGNATION	TOP CHORD TWO ANGLES				BOTTOM CHORD ONE ANGLE				MAIN WEB "W"				
	MK.	TYPE STEEL	CHORD SIZE	LENGTH	MK.	TYPE STEEL	CHORD SIZE	LENGTH	MK.	TYPE STEEL	DIA.	LENGTH	NO. OF K
24T16B - 1911	6	A242	1½"x1¼"x.275"	19'-11"	7B	A242	1½"x1¼"x.23"	19'-11"	3	A242	.98	13'-10¾"	2⅝K @ 3'-4" = 8'-11¼"
									3A	A242	.98	2'-4¾"	1K @ 1'-10" = 1'-10"
									3B	A242	.98	13'-10¾"	2⅝K @ 3'-4" = 8'-11¼"

TRUSS DATA	DOUBLE STRUT				DOUBLE STRUT				VERTICAL "EST" STRUT					BEARING ANGLES			
	MK.	TYPE STEEL	DIA.	LENGTH	MK.	TYPE STEEL	DIA.	LENGTH	MK.	TYPE STEEL	PCS.	DIA.	LENGTH	MK.	TYPE STEEL	CHORD SIZE	LENGTH
	DS_3	A242	.98	1'-6¾"	DS_{3A}	A242	.98	1'-6¾"	12	A242	2	.98	1'-10⅞"	9	A242	1½"x1¼"x.275"	11'-10"

ES END	TRUSS DESIGNATION	INCLINED "ST" STRUT				WE	CHORD PLATE				BOTTOM CHORD ONE ANGLE			
		MK.	TYPE STEEL	DIA.	LENGTH		MK.	TYPE STEEL	SIZE	LENGTH	MK.	TYPE STEEL	CHORD SIZE	LENGTH
	24T16B - 1911	2	A242	.98	1'-11¾"	1'-6¼"	–	——	——	——	7A	A242	1½"x1¼"x.23"	7'-1½"

EL END	TRUSS DESIGNATION	INCLINED "STL" STRUT				WEL	CHORD PLATE				BOTTOM CHORD ONE ANGLE			
		MK.	TYPE STEEL	DIA.	LENGTH		MK.	TYPE STEEL	SIZE	LENGTH	MK.	TYPE STEEL	CHORD SIZE	LENGTH
	24T16B - 1911	2	A242	.98	1'-11¾"	1'-6¼"	–	——	——	——	7	A242	1½"x1¼"x.23"	7'-1½"

BRIDGING TRUSS DETAILS
FOR
WORLD TRADE CENTER - N.Y.C.
FOR
THE PORT OF NEW YORK AUTHORITY

BRIDGING TRUSS 24T16B x 19'-11" LONG
WORLD TRADE CENTER TOWERS A & B

FABRICATION BY: LACLEDE STEEL COMPANY
FABRICATED AT MADISON, ILLINOIS
DESIGN DRAWING NO. 7-A82-17
PLATE
APPROVED FOR FABRICATION BY: [signature] FOR P.O.N.Y.A. DATE 11/7/68
DRAWN BY: gdc DATE SEPT. 26, 1968
APPROVED FOR FABRICATION BY: FOR FABRICATOR DATE
CHECKED BY: T.M. CHURA DATE SEPT. 26, 1968
IN CHARGE PROD. DEV
DETAILED BY: A. CARL WEBER
LACLEDE STEEL CO.
FABRICATION CONT. NO. W.T.C. 221
SHEET BT-216 B

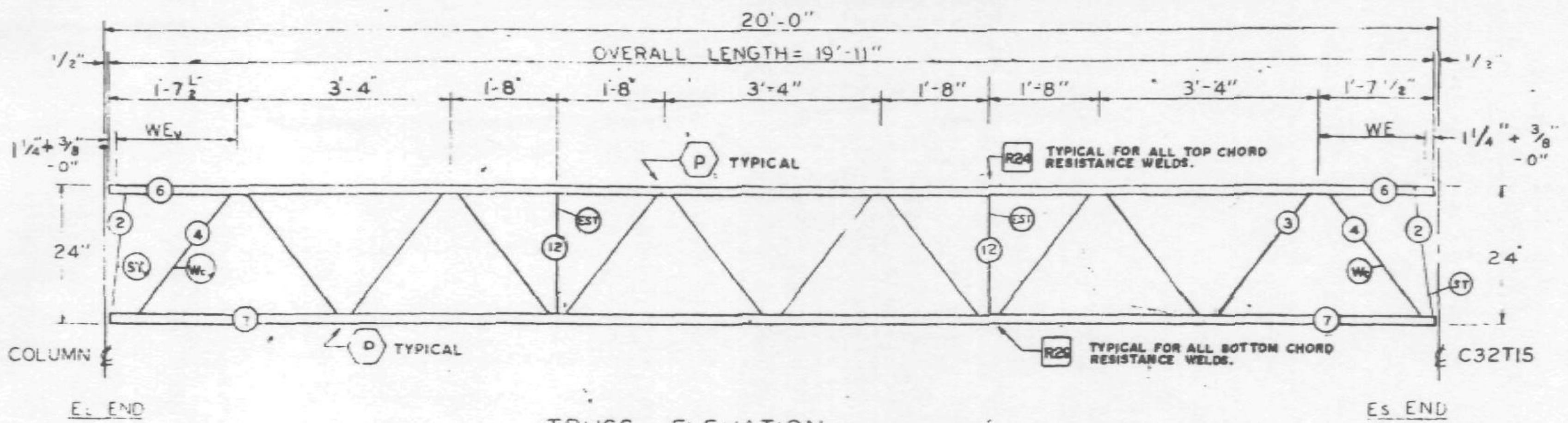

TRUSS ELEVATION

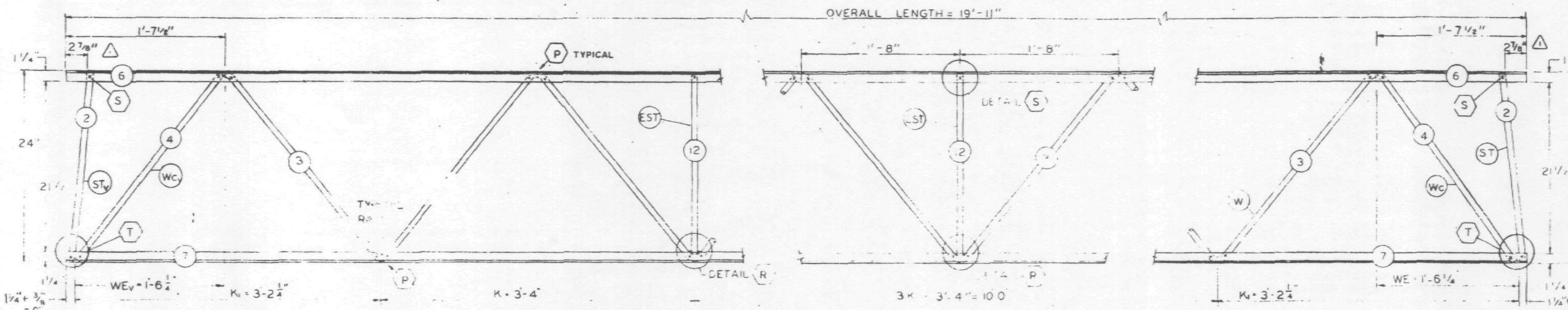

FABRICATION REQUIRMENTS		
	DESIGN	TOLERANCE
CAMBER AT MIDSPAN	0"	+ 3/8"
DESIGN DEPTH	24"	± 1/4"
PANEL "K"	3'-4"	± 1/4"
PANEL "K1"	3'-2½"	± 1/4"
WEB DEPTH	23½"	± 1/4"
OVERALL LENGTH	19'-11"	± 3/8"

ALL PANEL POINTS RESISTANCE WELDED (X)
ARC WELDS INDICATED AT SHADED AREAS AND AT BOTTOM CHORD WEB SPLICES
ALL WELD DETAILS SHOWN ON SHEETS ST290 AND ST291.
LETTERS IN HEXAGON INDICATE WELD DETAIL, ie., (A).
LETTERS AND NUMBERS IN SQUARES INDICATE RESISTANCE WELD STRENGTH IDENTIFIED IN THE QUALITY CONTROL PROGRAM, ie., [R29].

REF. DWG

7-AB2-1	10-4-68
7-AB2-17	10-4-68
7-AB4-15.1	10-4-68
7-AB4-16.18	7-22-68
7-AB4-28.41	7-22-68
7-AB4-38	10-4-68

PAINT
LACLEDE ELECTROCOAT
RED NO 10001

TRUSS DESIGNATION	TOP CHORD TWO ANGLES				BOTTOM CHORD TWO ANGLES				MAIN WEB "W"					VERTICAL "EST" STRUT					TRUSS DATA		FILLER	
	MK	TYPE STEEL	CHORD SIZE	LENGTH	MK	TYPE STEEL	CHORD SIZE	LENGTH	MK	TYPE STEEL	DIA	LENGTH	NO OF K	MK	TYPE STEEL	DIA	LENGTH	NUMBER REQUIRED			NO.	DIA.
24T16C - 1911	6	A242	1½"x1¼"x.275"	19'-11"	7	A242	1½"x1¼"x.230"	19'-11"	3	A242	.98	25'-7½"	5K @ 3'-4" = 16'-8"	12	A242	.98	1'-10⅞"	2			—	—

ES END	TRUSS DESIGNATION	WE	INCLINED "ST" STRUT				WEB "Wc"				
			MK	TYPE STEEL	DIA	LENGTH	MK	TYPE STEEL	PCS	DIA	LENGTH
	24T16C - 1911	1'-6¼"	2	A242	.98	1'-11¾"	4	A242	1	.98	2'-5½"

EL END	TRUSS DESIGNATION	BEARING ANGLES				WEv	DIAGONAL "Tv" STRUT				INCLINED "STv" STRUT				END STIFFENER MK V5			END STIFFENER MK V6			WEB "Wcv"				
		MK	TYPE STEEL	CHORD SIZE	LENGTH		MK	TYPE STEEL	DIA	LENGTH	MK	TYPE STEEL	DIA	LENGTH	TYPE STEEL	DIA	LENGTH	TYPE STEEL	DIA	LENGTH	MK	TYPE STEEL	PCS	DIA	LENGTH
	24T16C - 1911	—	—	—	—	1'-6¼"	—	—	—	—	2	A242	.98	1'-11¾"	—	—	—	—	—	—	4	A242	1	.98	2'-5½"

NO	DATE	REVISION	BY
△	11-11-68	AS NOTED	L.M.H.

BRIDGING TRUSS DETAILS
FOR
WORLD TRADE CENTER - N.Y.C.
FOR
THE PORT OF NEW YORK AUTHORITY

BRIDGING TRUSS 24T16C x 19'-11" LONG
WORLD TRADE CENTER TOWERS A-B

FABRICATION BY LACLEDE STEEL COMPANY

FABRICATED AT MADISON, ILLINOIS		DESIGN DRAWING NO 7-AB2-17	PLATE
APPROVED FOR FABRICATION BY [signature] FOR P.O.N.Y.A	DATE 11/18/68	DRAWN BY [initials] DATE OCT. 28, 1968	
APPROVED FOR FABRICATION BY ____ FOR FABRICATOR	DATE	CHECKED BY T.M. CHURA DATE OCT. 28, 1968	IN CHARGE OF PROD. DEV.
DETAILED BY A.C. WEBER		FABRICATION CONT NO W.T.C. 221	SHEET NO BT 216 C

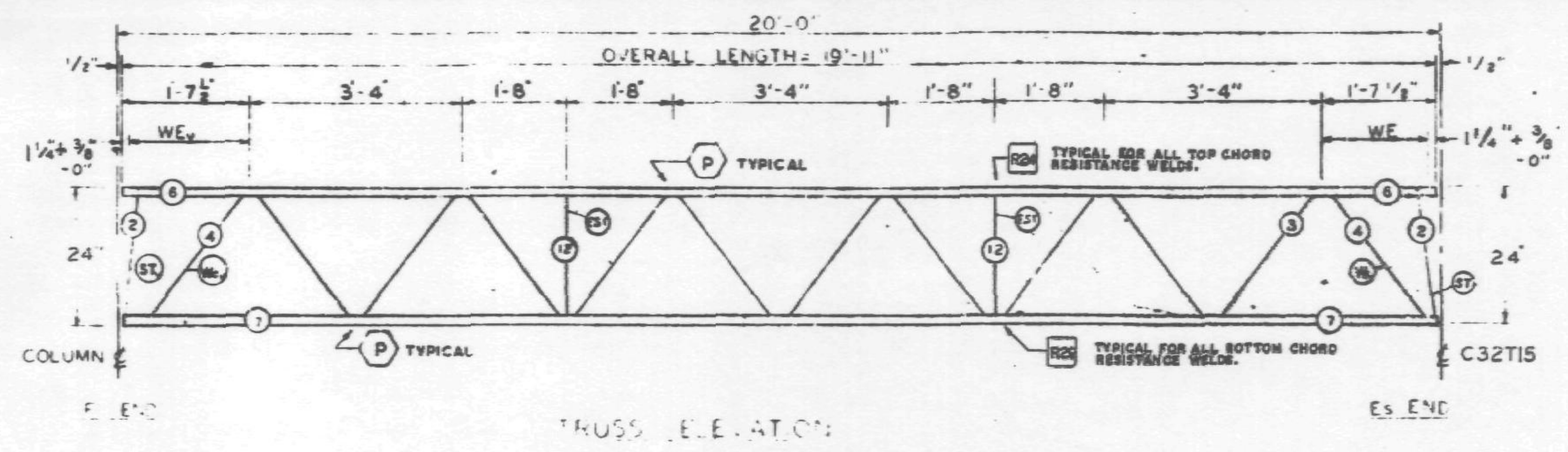

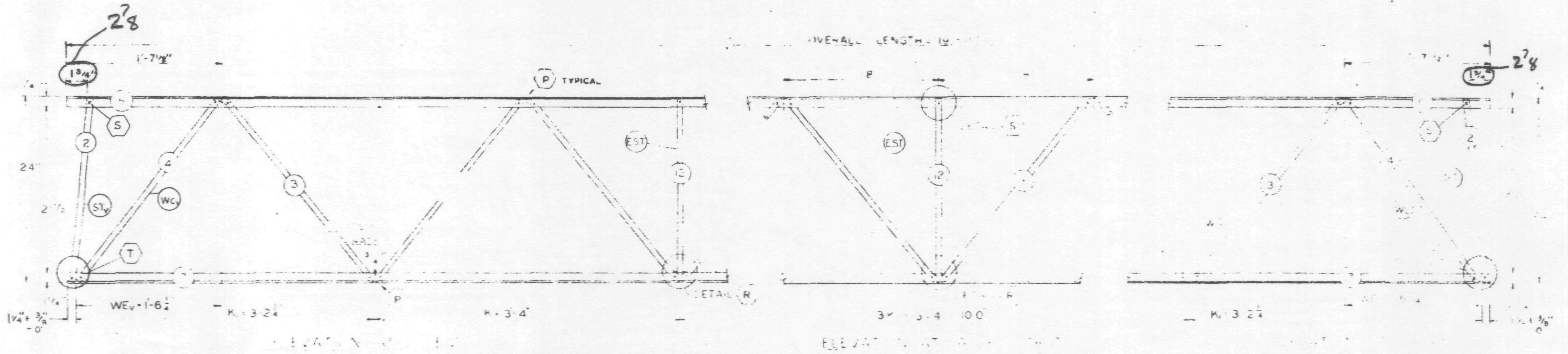

FABRICATION REQUIRMENTS		
	DESIGN	TOLERANCE
CAMBER AT MIDSPAN	0"	± 1/8"
DESIGN DEPTH	24"	± 1/4"
PANEL "K"	3'-4"	± 1/4"
PANEL "K1"	3'-2 1/2"	± 1/4"
WEB DEPTH	23 3/8"	± 1/4"
OVERALL LENGTH	19'-11"	± 1/8"

ALL PANEL POINTS RESISTANCE WELDED (X)
ARC WELDS INDICATED AT SHADED AREAS
AND AT BOTTOM CHORD WEB SPLICES
ALL WELD DETAILS SHOWN ON SHEETS ST290 AND ST291.
LETTERS IN HEXAGON INDICATE WELD DETAIL, ie., (A).
LETTERS AND NUMBERS IN SQUARES INDICATE RESISTANCE WELD STRENGTH IDENTIFIED IN THE QUALITY CONTROL PROGRAM, ie., R29.

REF. DWG.

7-AB2-1	10-4-68
7-AB2-17	10-4-68
7-AB4-15.1	10-4-68
7-AB4-16,18	7-22-68
7-AB4-28,41	7-22-68
7-AB4-38	10-4-68

PAINT
LACLEDE ELECTROCOAT
RED NO 10001

SKILLING - HELLE
CHRISTIANSEN - ROBERTSON
Structural & Civil Engineers
X APPROVED AS NOTED
11/7/68 by SK

TRUSS DESIGNATION	TOP CHORD TWO ANGLES				BOTTOM CHORD TWO ANGLES				MAIN WEB "W"					VERTICAL "EST" STRUT					TRUSS DATA		FILLER	
	MK	TYPE STEEL	CHORD SIZE	LENGTH	MK	TYPE STEEL	CHORD SIZE	LENGTH	MK	TYPE STEEL	DIA	LENGTH	NO OF K.	MK	TYPE STEEL	DIA	LENGTH	NUMBER REQUIRED			NO.	DIA.
24T16C - 1911	6	A242	1 1/2" x 1 1/4" x .275"	19'-11"	7	A242	1 1/2" x 1 1/4 x .230"	19'-11"	3	A242	.98	25'-7 1/2"	5K @ 3'-4" = 16'-8"	12	A242	.98	1'-10 7/8"	2			—	—

Es END	TRUSS DESIGNATION	WE	INCLINED "ST" STRUT				WEB "Wc"				
			MK	TYPE STEEL	DIA	LENGTH	MK	TYPE STEEL	PCS.	DIA	LENGTH
	24T16C - 1911	1'-6 1/4"	2	A242	.98	1'-11 3/4"	4	A242	1	.98	2'-5 1/2"

EL END	TRUSS DESIGNATION	BEARING ANGLES				WEv	DIAGONAL "Tv" STRUT				INCLINED "STv" STRUT				END STIFFENER MK V5			END STIFFENER MK V6			WEB "Wcv"				
		MK	TYPE STEEL	CHORD SIZE	LENGTH		MK	TYPE STEEL	DIA	LENGTH	MK	TYPE STEEL	DIA	LENGTH	TYPE STEEL	DIA.	LENGTH	TYPE STEEL	DIA.	LENGTH	MK	TYPE STEEL	PCS	DIA	LENGTH
	24T16C - 1911	—	—	——	——	1'-6 1/4"	—	—	—	——	2	A242	.98	1'-11 3/4"	—	—	——	—	—	——	4	A242	1	.98	2'-5 1/2"

BRIDGING TRUSS DETAILS
FOR
WORLD TRADE CENTER - N. Y. C.
FOR
THE PORT OF NEW YORK AUTHORITY

BRIDGING TRUSS 24T16C x 19'-11" LONG
WORLD TRADE CENTER TOWERS A-B

FABRICATION BY LACLEDE STEEL COMPANY

FABRICATED AT: MADISON, ILLINOIS		DESIGN DRAWING NO. 7-AB2-17	PLATE
APPROVED FOR FABRICATION BY ______ FOR P.O.N.Y.A	DATE	DRAWN BY: L.A. DATE OCT. 28, 1968	
APPROVED FOR FABRICATION BY ______ FOR FABRICATOR	DATE	CHECKED BY: T.M. CHURA DATE OCT. 28, 1968	IN CHARGE OF PROD. DEV.
DETAILED BY A.C. WEBER (LACLEDE STEEL CO.)		FABRICATION CONT. NO. WTC 221	SHEET NO BT 216 C

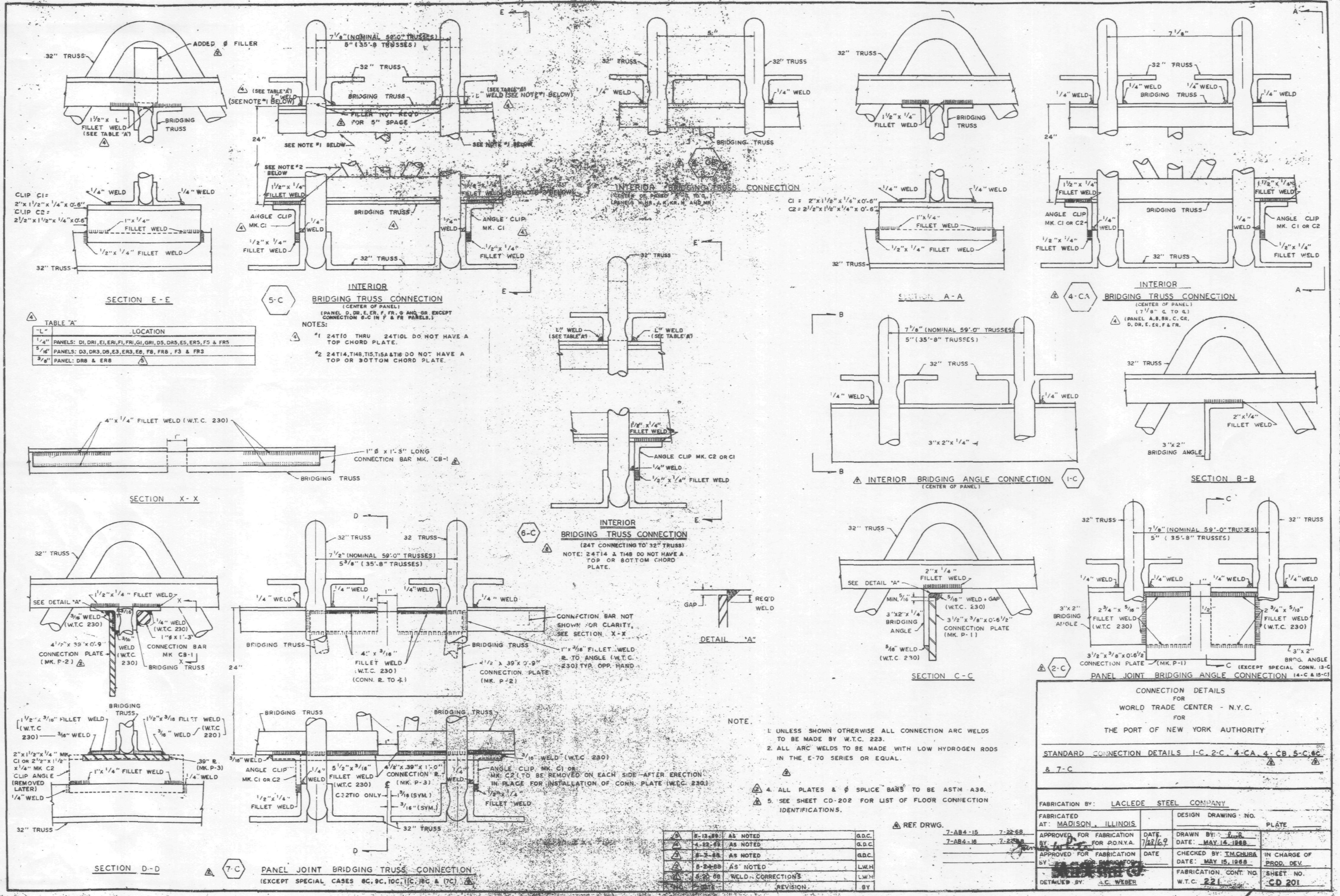

TABLE "A"

"L"	LOCATION
1/4"	PANELS: D1, DR1, E1, ER1, F1, FR1, G1, GR1, D5, DR5, E5, ER5, F5 & FR5
5/16"	PANELS: D3, DR3, D8, E3, ER3, E8, F8, FR8, F3 & FR3
3/8"	PANEL: DR8 & ER8

NOTE.

1. UNLESS SHOWN OTHERWISE ALL CONNECTION ARC WELDS TO BE MADE BY W.T.C. 223.
2. ALL ARC WELDS TO BE MADE WITH LOW HYDROGEN RODS IN THE E-70 SERIES OR EQUAL.
4. ALL PLATES & ∅ SPLICE BARS TO BE ASTM A36.
5. SEE SHEET CD-202 FOR LIST OF FLOOR CONNECTION IDENTIFICATIONS.

REF. DRWG.

7-AB4-15	7-22-68
7-AB4-16	7-22-68

NO.	DATE	REVISION	BY
5	5-13-69	AS NOTED	G.D.C.
4	4-22-69	AS NOTED	G.D.C.
3	8-7-68	AS NOTED	G.D.C.
2	6-24-68	AS NOTED	L.W.H
1	5-20-68	WELD CORRECTIONS	L.W.H

CONNECTION DETAILS
FOR
WORLD TRADE CENTER - N.Y.C.
FOR
THE PORT OF NEW YORK AUTHORITY

STANDARD CONNECTION DETAILS 1-C, 2-C, 4-CA, 4-CB, 5-C, 6C & 7-C

FABRICATION BY: LACLEDE STEEL COMPANY

FABRICATED AT: MADISON, ILLINOIS

DESIGN DRAWING NO. ______ PLATE ______

APPROVED FOR FABRICATION BY ______ FOR P.O.N.Y.A. DATE 7/28/69

DRAWN BY: L.W.H. DATE: MAY 14, 1968

APPROVED FOR FABRICATION BY ______ FOR FABRICATOR DATE

CHECKED BY: T.M. CHURA DATE: MAY 15, 1968

IN CHARGE OF PROD. DEV.

DETAILED BY: A.C. WEBER

FABRICATION CONT. NO. W.T.C. 221

SHEET NO. CD 201

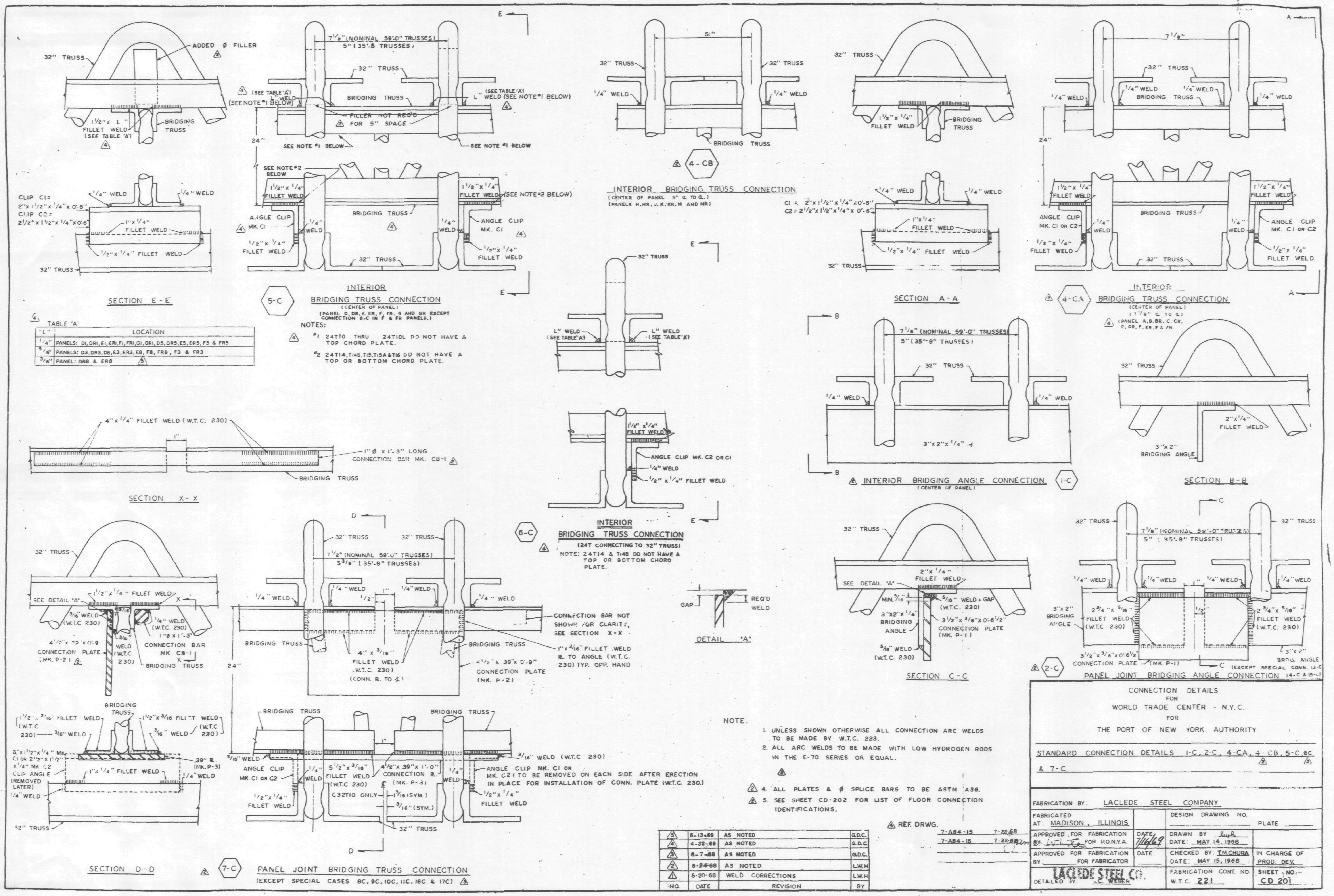
32" TRUSS
ADDED Ø FILLER
1 1/2"x L" FILLET WELD (SEE TABLE 'A')
BRIDGING TRUSS
SECTION E-E
CLIP C1= 2"x1 1/2"x1/4"x0'-6"
CLIP C2= 2 1/2"x1 1/2"x1/4"x0'-6"
1/4" WELD
1"x1/4" FILLET WELD
1/2"x1/4" FILLET WELD
TABLE 'A'
"L" | LOCATION
1/4" | PANELS: D1, DR1, E1, ER1, F1, FR1, G1, GR1, D5, DR5, E5, ER5, F5 & FR5
5/16" | PANELS: D3, DR3, D8, E3, ER3, E8, F8, FR8, F3 & FR3
3/8" | PANEL: DR8 & ER8
7 1/8" (NOMINAL 59'-0" TRUSSES)
5" (35'-8 TRUSSES)
(SEE TABLE 'A') L" WELD (SEE NOTE #1 BELOW)
FILLER NOT REQ'D FOR 5" SPACE
SEE NOTE #1 BELOW
SEE NOTE #2 BELOW
1 1/2"x1/4" FILLET WELD
ANGLE CLIP MK. C1
1/2"x1/4" FILLET WELD
INTERIOR BRIDGING TRUSS CONNECTION
(CENTER OF PANEL)
(PANEL D, DR, E, ER, F, FR, G AND GR EXCEPT CONNECTION 6-C IN F & FR PANELS.)
5-C
NOTES:
#1 24T10 THRU 24T10L DO NOT HAVE A TOP CHORD PLATE.
#2 24T14, T14B, T15, T15A & T16 DO NOT HAVE A TOP OR BOTTOM CHORD PLATE.
INTERIOR BRIDGING TRUSS CONNECTION
(CENTER OF PANEL 5" ℄ TO ℄.)
(PANELS H, HR, J, K, KR, M AND MR)
4-CB
C1 = 2"x1 1/2"x1/4"x0'-6"
C2 = 2 1/2"x1 1/2"x1/4"x0'-6"
L" WELD (SEE TABLE 'A')
ANGLE CLIP MK. C2 OR C1
INTERIOR BRIDGING TRUSS CONNECTION
(24T CONNECTING TO 32" TRUSS)
NOTE: 24T14 & T14B DO NOT HAVE A TOP OR BOTTOM CHORD PLATE.
6-C
SECTION A-A
INTERIOR BRIDGING TRUSS CONNECTION
(CENTER OF PANEL)
(7 1/8" ℄ TO ℄)
(PANEL A, B, BR, C, CR, D, DR, E, ER, F & FR.
4-CA
3"x2"x1/4"
INTERIOR BRIDGING ANGLE CONNECTION
(CENTER OF PANEL)
1-C
2"x1/4" FILLET WELD
3"x2" BRIDGING ANGLE
SECTION B-B
4"x1/4" FILLET WELD (W.T.C. 230)
1" Ø x 1'-3" LONG CONNECTION BAR MK. CB-1
SECTION X-X
SEE DETAIL "A"
3/16" WELD (W.T.C. 230)
1"Ø x 1'-3" CONNECTION BAR MK CB-1
4 1/2"x39"x0'-9 CONNECTION PLATE (MK. P-2)
SECTION D-D
1 1/2"x3/16" FILLET WELD (W.T.C. 230)
2"x1 1/2"x1/4" MK. C1 OR 2 1/2"x1 1/2"x1/4" MK C2 CLIP ANGLE (REMOVED LATER)
.39" R. (MK. P-3)
5 3/8" (35'-8" TRUSSES)
CONNECTION BAR NOT SHOWN FOR CLARITY, SEE SECTION X-X
4"x3/16" FILLET WELD (W.T.C. 230) (CONN. R. TO ∠)
1"x3/16" FILLET WELD R. TO ANGLE (W.T.C. 230) TYP. OPP. HAND
4 1/2"x.39"x0'-9" CONNECTION PLATE (MK. P-2)
5 1/2"x3/16" FILLET WELD (W.T.C. 230)
4 1/2"x.39"x1'-0" CONNECTION R. (MK. P-3)
C32T10 ONLY
ANGLE CLIP MK. C1 OR MK. C2 (TO BE REMOVED ON EACH SIDE AFTER ERECTION IN PLACE FOR INSTALLATION OF CONN. PLATE (W.T.C. 230.)
7-C
PANEL JOINT BRIDGING TRUSS CONNECTION
(EXCEPT SPECIAL CASES 8C, 9C, 10C, 11C, 16C & 17C)
GAP
REQ'D WELD
DETAIL "A"
MIN. 5/16
5/16" WELD + GAP (W.T.C. 230)
3"x2"x1/4" BRIDGING ANGLE
3 1/2"x3/8"x0'-6 1/2" CONNECTION PLATE (MK. P-1)
SECTION C-C
2 3/4"x5/16" FILLET WELD (W.T.C. 230)
3 1/2"x3/8"x0'-6 1/2" CONNECTION PLATE (MK. P-1)
3"x2" BRDG. ANGLE
(EXCEPT SPECIAL CONN. 13-C & 15-C)
2-C
PANEL JOINT BRIDGING ANGLE CONNECTION
NOTE.
1. UNLESS SHOWN OTHERWISE ALL CONNECTION ARC WELDS TO BE MADE BY W.T.C. 223.
2. ALL ARC WELDS TO BE MADE WITH LOW HYDROGEN RODS IN THE E-70 SERIES OR EQUAL.
4. ALL PLATES & Ø SPLICE BARS TO BE ASTM A36.
5. SEE SHEET CD-202 FOR LIST OF FLOOR CONNECTION IDENTIFICATIONS.
REF. DRWG.
7-AB4-15 7-22-68
7-AB4-16 7-22-68
5 | 6-13-69 | AS NOTED | G.D.C.
4 | 4-22-69 | AS NOTED | G.D.C.
3 | 8-7-68 | AS NOTED | G.D.C.
2 | 6-24-68 | AS NOTED | L.W.H.
1 | 5-20-68 | WELD CORRECTIONS | L.W.H.
NO. | DATE | REVISION | BY
CONNECTION DETAILS FOR WORLD TRADE CENTER - N.Y.C. FOR THE PORT OF NEW YORK AUTHORITY
STANDARD CONNECTION DETAILS 1-C, 2-C, 4-CA, 4-CB, 5-C, 6C & 7-C
FABRICATION BY: LACLEDE STEEL COMPANY
FABRICATED AT: MADISON, ILLINOIS
DESIGN DRAWING NO.
PLATE
APPROVED FOR FABRICATION FOR P.O.N.Y.A.
DATE 7/16/69
DRAWN BY
DATE: MAY 14, 1968
APPROVED FOR FABRICATION BY FOR FABRICATOR
CHECKED BY T.M.CHURA
DATE: MAY 15, 1968
IN CHARGE OF PROD. DEV.
LACLEDE STEEL CO.
DETAILED BY L. WEBER
FABRICATION CONT. NO. W.T.C. 221
SHEET NO. CD 201

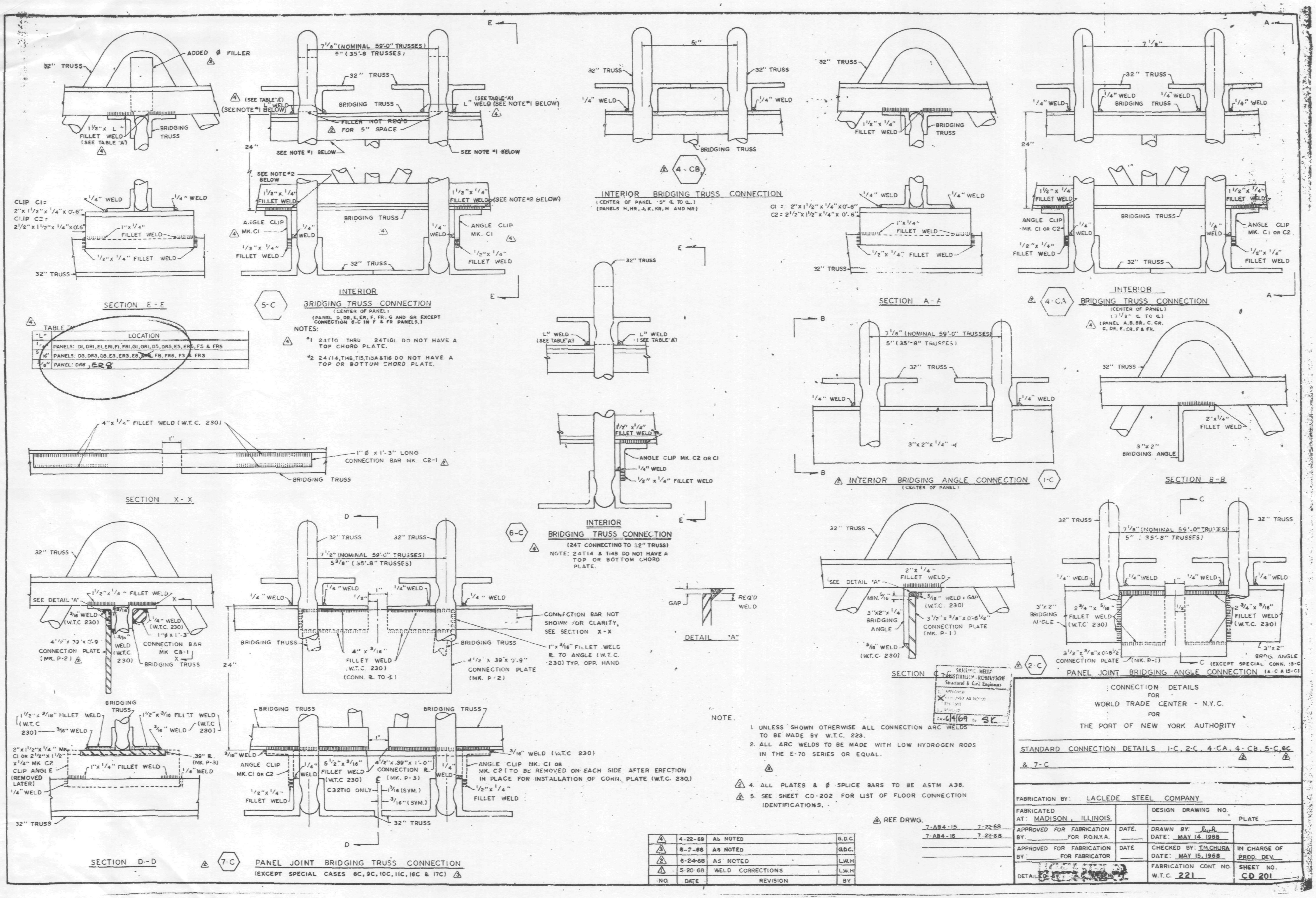
SECTION E - E
CLIP C1 = 2"x1 1/2"x 1/4"x 0'-6"
CLIP C2 = 2 1/2"x 1 1/2"x 1/4"x 0'-6"
TABLE "A"
"L" | LOCATION
1/4" | PANELS: D1, DR1, E1, ER1, F1, FR1, G1, GR1, D5, DR5, E5, ER5, F5 & FR5
5/16" | PANELS: D3, DR3, D8, E3, ER3, E8, ER8, F8, FR8, F3 & FR3
3/8" | PANEL: DR8, ER8
5-C
INTERIOR BRIDGING TRUSS CONNECTION
(CENTER OF PANEL)
(PANEL D, DR, E, ER, F, FR, G AND GR EXCEPT CONNECTION 6-C IN F & FR PANELS.)
NOTES:
#1 24T10 THRU 24T16L DO NOT HAVE A TOP CHORD PLATE.
#2 24T14, T14B, T15, T15A & T16 DO NOT HAVE A TOP OR BOTTOM CHORD PLATE.
4-CB
INTERIOR BRIDGING TRUSS CONNECTION
(CENTER OF PANEL 5" ℄ TO ℄)
(PANELS H, HR, J, K, KR, M AND MR)
C1 = 2"x1 1/2"x 1/4"x 0'-6"
C2 = 2 1/2"x 1 1/2"x 1/4"x 0'-6"
SECTION A - A
4-CA
INTERIOR BRIDGING TRUSS CONNECTION
(CENTER OF PANEL)
(7 1/8" ℄ TO ℄)
(PANEL A, B, BR, C, CR, C, DR, E, ER, F & FR.
SECTION X - X
6-C
INTERIOR BRIDGING TRUSS CONNECTION
(24T CONNECTING TO 32" TRUSS)
NOTE: 24T14 & T14B DO NOT HAVE A TOP OR BOTTOM CHORD PLATE.
INTERIOR BRIDGING ANGLE CONNECTION (CENTER OF PANEL) 1-C
SECTION B-B
DETAIL "A"
SECTION C - C
2-C
PANEL JOINT BRIDGING ANGLE CONNECTION (4-C & 15-C)
(EXCEPT SPECIAL CONN. 13-C
SECTION D-D
7-C
PANEL JOINT BRIDGING TRUSS CONNECTION
(EXCEPT SPECIAL CASES 8C, 9C, 10C, 11C, 16C & 17C)
SKILLING - HELLE CHRISTIANSEN - ROBERTSON Structural & Civil Engineers
APPROVED AS NOTED
6/4/69 SK
NOTE.
1. UNLESS SHOWN OTHERWISE ALL CONNECTION ARC WELDS TO BE MADE BY W.T.C. 223.
2. ALL ARC WELDS TO BE MADE WITH LOW HYDROGEN RODS IN THE E-70 SERIES OR EQUAL.
4. ALL PLATES & Ø SPLICE BARS TO BE ASTM A36.
5. SEE SHEET CD-202 FOR LIST OF FLOOR CONNECTION IDENTIFICATIONS.
REF. DRWG.
7-A84-15 7-22-68
7-A84-16 7-22-68
4 | 4-22-69 | AS NOTED | G.D.C.
3 | 8-7-68 | AS NOTED | G.D.C.
2 | 6-24-68 | AS NOTED | L.W.H.
1 | 5-20-68 | WELD CORRECTIONS | L.W.H.
NO. | DATE | REVISION | BY
CONNECTION DETAILS FOR WORLD TRADE CENTER - N.Y.C. FOR THE PORT OF NEW YORK AUTHORITY
STANDARD CONNECTION DETAILS 1-C, 2-C, 4-CA, 4-CB, 5-C, 6C & 7-C
FABRICATION BY: LACLEDE STEEL COMPANY
FABRICATED AT: MADISON, ILLINOIS
DESIGN DRAWING NO.
PLATE
APPROVED FOR FABRICATION BY FOR P.O.N.Y.A.
DATE.
DRAWN BY: LWH
DATE: MAY 14, 1968
APPROVED FOR FABRICATION BY FOR FABRICATOR
DATE
CHECKED BY: T.M.CHURA
DATE: MAY 15, 1968
IN CHARGE OF PROD. DEV.
DETAILED BY
FABRICATION CONT. NO. W.T.C. 221
SHEET NO. CD 201

O 700-779

WTC1-131-LERA

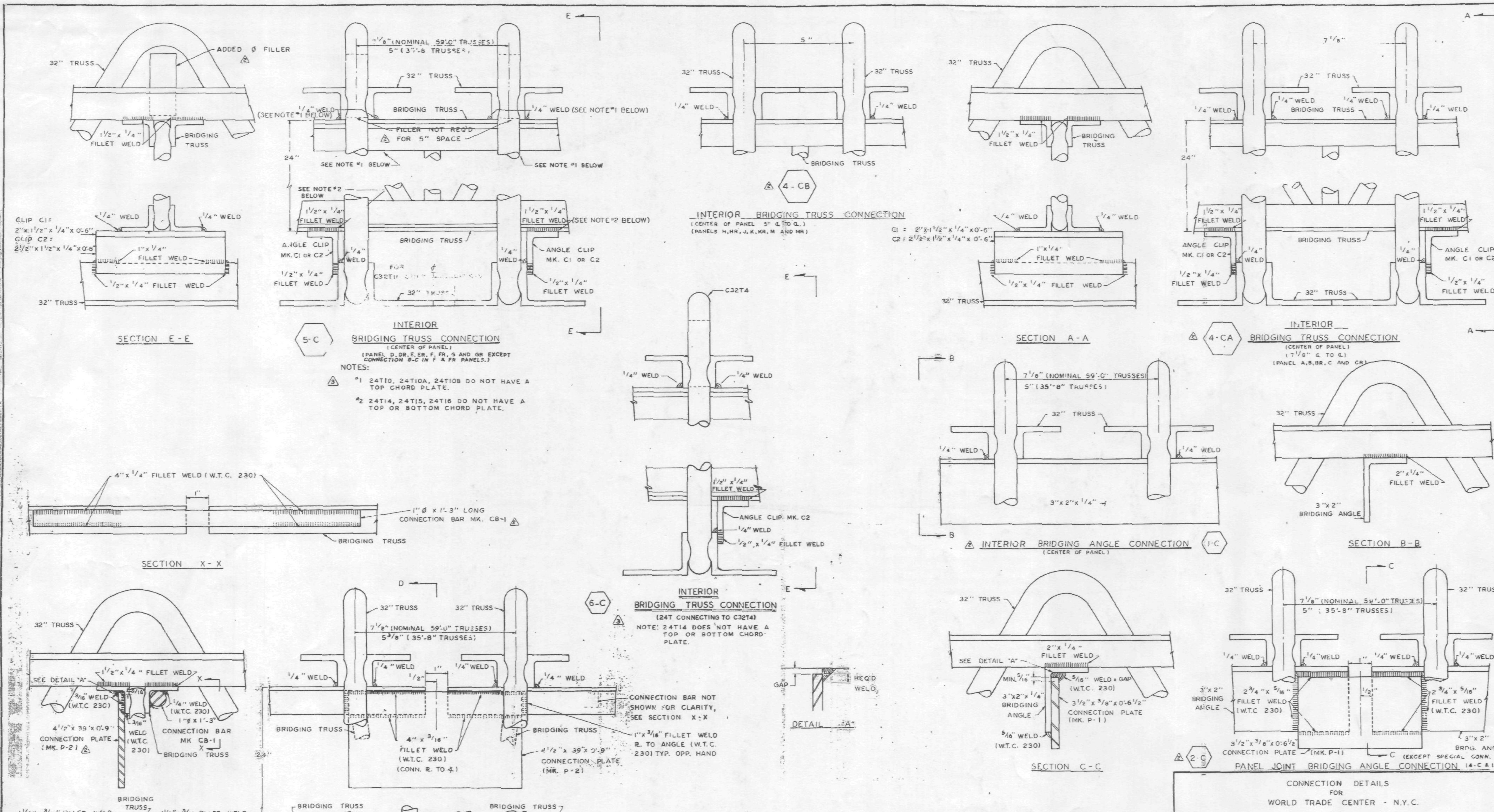

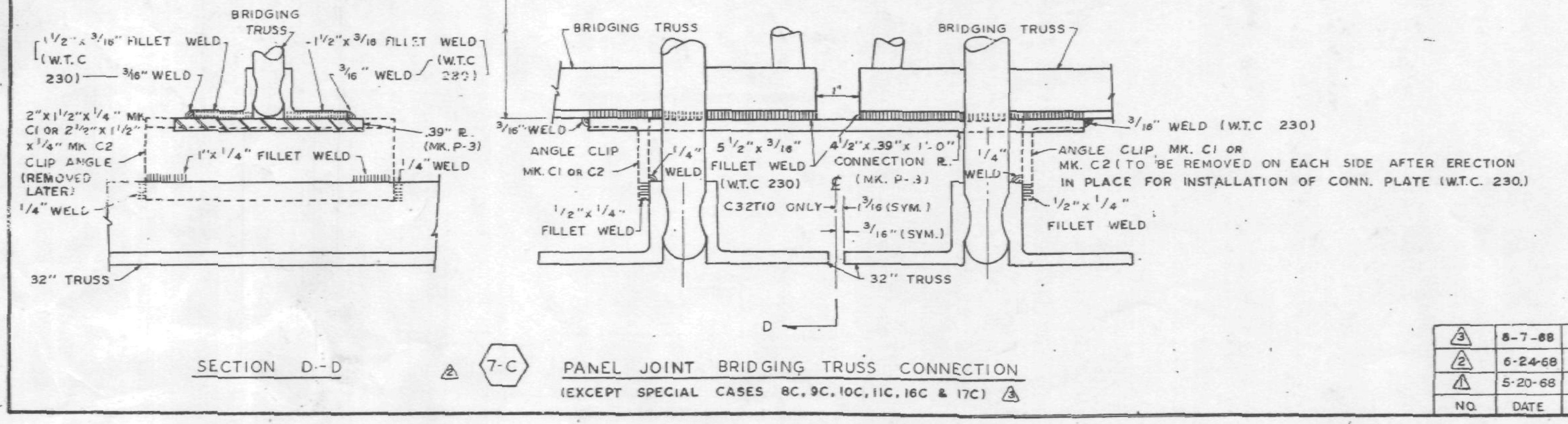

NOTE.

1. UNLESS SHOWN OTHERWISE ALL CONNECTION ARC WELDS TO BE MADE BY W.T.C. 223.
2. ALL ARC WELDS TO BE MADE WITH LOW HYDROGEN RODS IN THE E-70 SERIES OR EQUAL.

△3

△2 4. ALL PLATES & Ø SPLICE BARS TO BE ASTM A36.

△2 5. SEE SHEET CD-202 FOR LIST OF FLOOR CONNECTION IDENTIFICATIONS.

△2 REF. DRWG.

7-AB4-15	5-6-68
7-AB4-16	5-6-68

NO.	DATE	REVISION	BY
△3	8-7-68	AS NOTED	G.D.C.
△2	6-24-68	AS NOTED	L.W.H
△1	5-20-68	WELD CORRECTIONS	L.W.H

CONNECTION DETAILS
FOR
WORLD TRADE CENTER - N.Y.C.
FOR
THE PORT OF NEW YORK AUTHORITY

STANDARD CONNECTION DETAILS 1-C, 2-C, 4 CA, 4-CB △2, 5-C, 6C △3 & 7-C

FABRICATION BY: LACLEDE STEEL COMPANY

FABRICATED AT MADISON, ILLINOIS		DESIGN DRAWING NO.	PLATE
APPROVED FOR FABRICATION BY [signature] FOR P.O.N.Y.A.	DATE 8/29/68	DRAWN BY lwh DATE MAY 14, 1968	
APPROVED FOR FABRICATION BY: FOR FABRICATOR	DATE	CHECKED BY: T.M. CHURA DATE: MAY 15, 1968	IN CHARGE OF PROD. DEV.
DETAILED BY L.C. WEBER		FABRICATION CONT. NO. W.T.C. 221	SHEET NO. CD 201

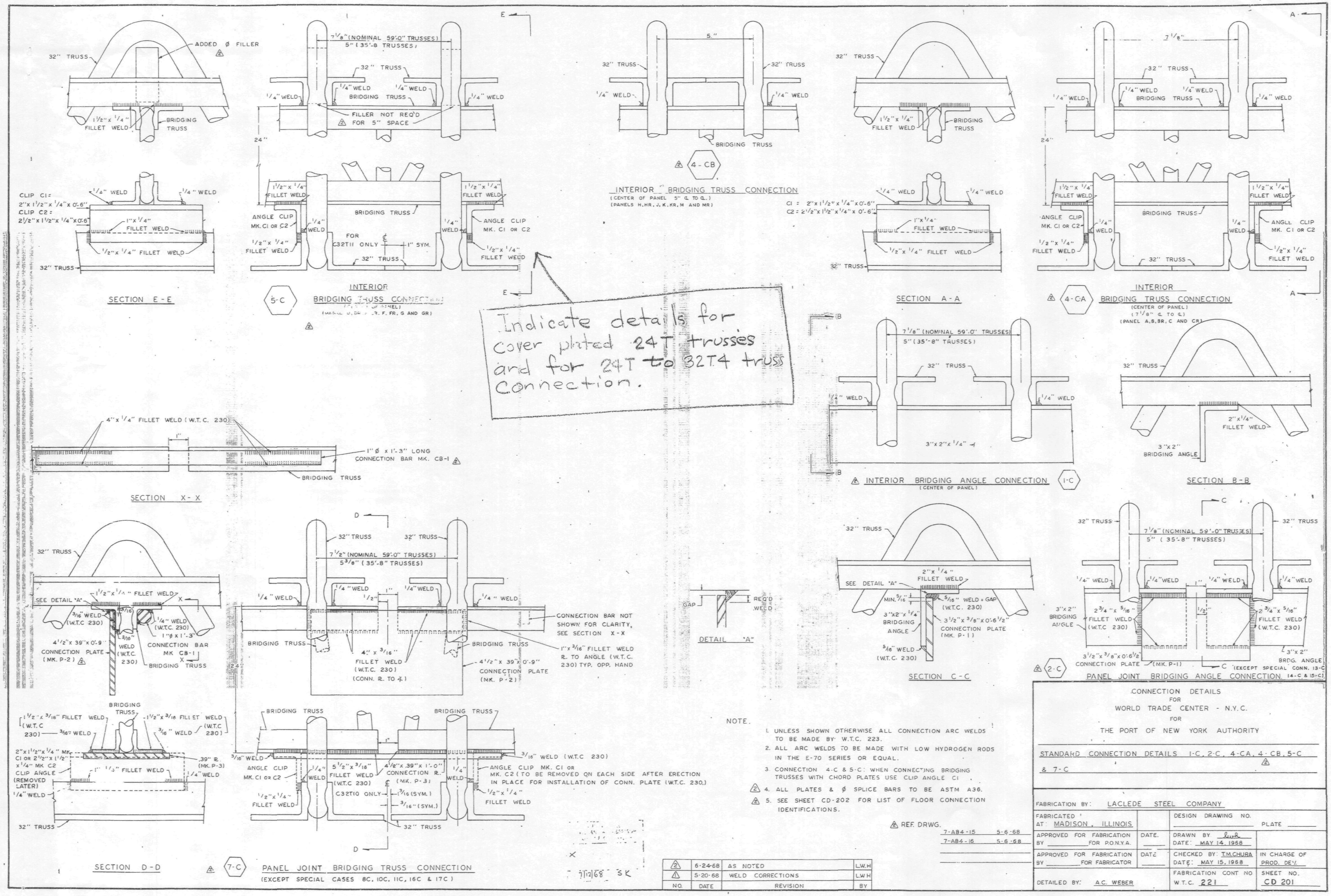

NOTE.

1. UNLESS SHOWN OTHERWISE ALL CONNECTION ARC WELDS TO BE MADE BY W.T.C. 223.
2. ALL ARC WELDS TO BE MADE WITH LOW HYDROGEN RODS IN THE E-70 SERIES OR EQUAL.
3. CONNECTION 4-C & 5-C: WHEN CONNECTING BRIDGING TRUSSES WITH CHORD PLATES USE CLIP ANGLE C1.
4. ALL PLATES & Ø SPLICE BARS TO BE ASTM A36.
5. SEE SHEET CD-202 FOR LIST OF FLOOR CONNECTION IDENTIFICATIONS.

REF. DRWG.

7-AB4-15	5-6-68
7-AB4-16	5-6-68

NO.	DATE	REVISION	BY
2	6-24-68	AS NOTED	L.W.H.
1	5-20-68	WELD CORRECTIONS	L.W.H.

CONNECTION DETAILS FOR WORLD TRADE CENTER - N.Y.C. FOR THE PORT OF NEW YORK AUTHORITY

STANDARD CONNECTION DETAILS 1-C, 2-C, 4-CA, 4-CB, 5-C & 7-C

FABRICATION BY: LACLEDE STEEL COMPANY
FABRICATED AT: MADISON, ILLINOIS
DESIGN DRAWING NO. ____ PLATE ____
APPROVED FOR FABRICATION BY ____ FOR P.O.N.Y.A. DATE.
DRAWN BY L.W.H. DATE: MAY 14, 1968
APPROVED FOR FABRICATION BY ____ FOR FABRICATOR DATE
CHECKED BY: T.M. CHURA DATE: MAY 15, 1968
IN CHARGE OF PROD. DEV.
DETAILED BY: A.C. WEBER
FABRICATION CONT NO W.T.C. 221
SHEET NO. CD 201

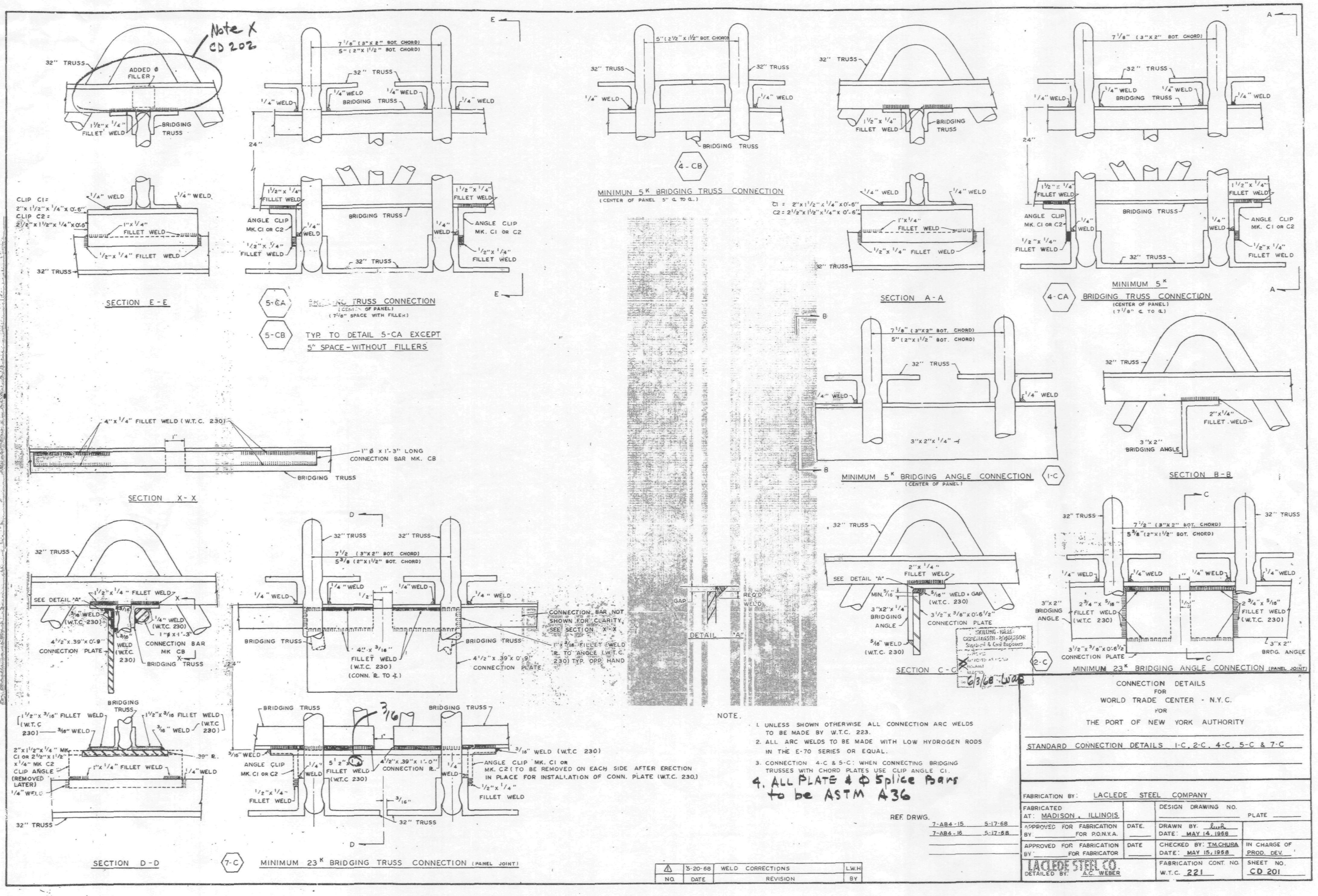

Note X
CD 202
32" TRUSS
ADDED Ø FILLER
1 1/2" x 1/4" FILLET WELD
BRIDGING TRUSS
CLIP C1 = 2" x 1 1/2" x 1/4" x 0'-6"
CLIP C2 = 2 1/2" x 1 1/2" x 1/4" x 0'-6"
1/4" WELD
1" x 1/4" FILLET WELD
1/2" x 1/4" FILLET WELD
SECTION E-E
7 1/8" (3" x 2" BOT. CHORD)
5" (2" x 1 1/2" BOT. CHORD)
24"
ANGLE CLIP MK. C1 OR C2
5-CA BRIDGING TRUSS CONNECTION (CENTER OF PANEL) (7 1/8" SPACE WITH FILLER)
5-CB TYP. TO DETAIL 5-CA EXCEPT 5" SPACE - WITHOUT FILLERS
5" (2 1/2" x 1 1/2" BOT. CHORD)
4-CB
MINIMUM 5K BRIDGING TRUSS CONNECTION (CENTER OF PANEL 5" ℄ TO ℄)
C1 = 2" x 1 1/2" x 1/4" x 0'-6"
C2 = 2 1/2" x 1 1/2" x 1/4" x 0'-6"
SECTION A-A
4-CA MINIMUM 5K BRIDGING TRUSS CONNECTION (CENTER OF PANEL) (7 1/8" ℄ TO ℄)
4" x 1/4" FILLET WELD (W.T.C. 230)
1" Ø x 1'-3" LONG CONNECTION BAR MK. CB
SECTION X-X
3" x 2" x 1/4"
MINIMUM 5K BRIDGING ANGLE CONNECTION (CENTER OF PANEL) 1-C
2" x 1/4" FILLET WELD
3" x 2" BRIDGING ANGLE
SECTION B-B
SEE DETAIL "A"
1/2" x 1/4" FILLET WELD
3/16" WELD (W.T.C. 230)
1/4" WELD (W.T.C. 230)
1" Ø x 1'-3" CONNECTION BAR MK CB
4 1/2" x .39" x 0'-9" CONNECTION PLATE
3/16" WELD (W.T.C. 230)
7 1/2 (3" x 2" BOT. CHORD)
5 3/8 (2" x 1 1/2" BOT. CHORD)
4" x 3/16" FILLET WELD (W.T.C. 230) (CONN. ℄ TO ∠)
4 1/2" x .39" x 0'-9" CONNECTION PLATE
CONNECTION BAR NOT SHOWN FOR CLARITY, SEE SECTION X-X
1" x 3/16" FILLET WELD ℄ TO ANGLE (W.T.C. 230) TYP. OPP. HAND
GAP
REQ'D WELD
DETAIL "A"
MIN. 5/16
5/16" WELD + GAP (W.T.C. 230)
3" x 2" x 1/4" BRIDGING ANGLE
3 1/2" x 3/8" x 0'-6 1/2" CONNECTION PLATE
5/16" WELD (W.T.C. 230)
SECTION C-C
6/3/68 LWS
2 3/4" x 5/16" FILLET WELD (W.T.C. 230)
3" x 2" BRDG. ANGLE
3 1/2" x 3/8" x 0'-6 1/2" CONNECTION PLATE
2-C MINIMUM 23K BRIDGING ANGLE CONNECTION (PANEL JOINT)
1 1/2" x 3/16" FILLET WELD (W.T.C. 230)
3/16" WELD
2" x 1 1/2" x 1/4" MK. C1 OR 2 1/2" x 1 1/2" x 1/4" MK C2 CLIP ANGLE (REMOVED LATER)
.39" ℄
SECTION D-D
3/16
5 1/2" x .39" x 1'-0" CONNECTION ℄
ANGLE CLIP MK. C1 OR MK. C2 (TO BE REMOVED ON EACH SIDE AFTER ERECTION IN PLACE FOR INSTALLATION OF CONN. PLATE (W.T.C. 230))
7-C MINIMUM 23K BRIDGING TRUSS CONNECTION (PANEL JOINT)
NOTE.
1. UNLESS SHOWN OTHERWISE ALL CONNECTION ARC WELDS TO BE MADE BY W.T.C. 223.
2. ALL ARC WELDS TO BE MADE WITH LOW HYDROGEN RODS IN THE E-70 SERIES OR EQUAL.
3. CONNECTION 4-C & 5-C: WHEN CONNECTING BRIDGING TRUSSES WITH CHORD PLATES USE CLIP ANGLE C1.
4. ALL PLATE & Ø Splice Bars to be ASTM A36
REF. DRWG.
7-AB4-15 5-17-68
7-AB4-16 5-17-68
1 | 5-20-68 | WELD CORRECTIONS | L.W.H.
NO. | DATE | REVISION | BY
CONNECTION DETAILS FOR WORLD TRADE CENTER - N.Y.C. FOR THE PORT OF NEW YORK AUTHORITY
STANDARD CONNECTION DETAILS 1-C, 2-C, 4-C, 5-C & 7-C
FABRICATION BY: LACLEDE STEEL COMPANY
FABRICATED AT: MADISON, ILLINOIS
APPROVED FOR FABRICATION BY FOR P.O.N.Y.A. DATE.
APPROVED FOR FABRICATION BY FOR FABRICATOR DATE
LACLEDE STEEL CO. DETAILED BY: A.C. WEBER
DESIGN DRAWING NO. PLATE
DRAWN BY: L.R. DATE: MAY 14, 1968
CHECKED BY: T.M.CHURA DATE: MAY 15, 1968
IN CHARGE OF PROD. DEV.
FABRICATION CONT. NO. W.T.C. 221
SHEET NO. CD 201

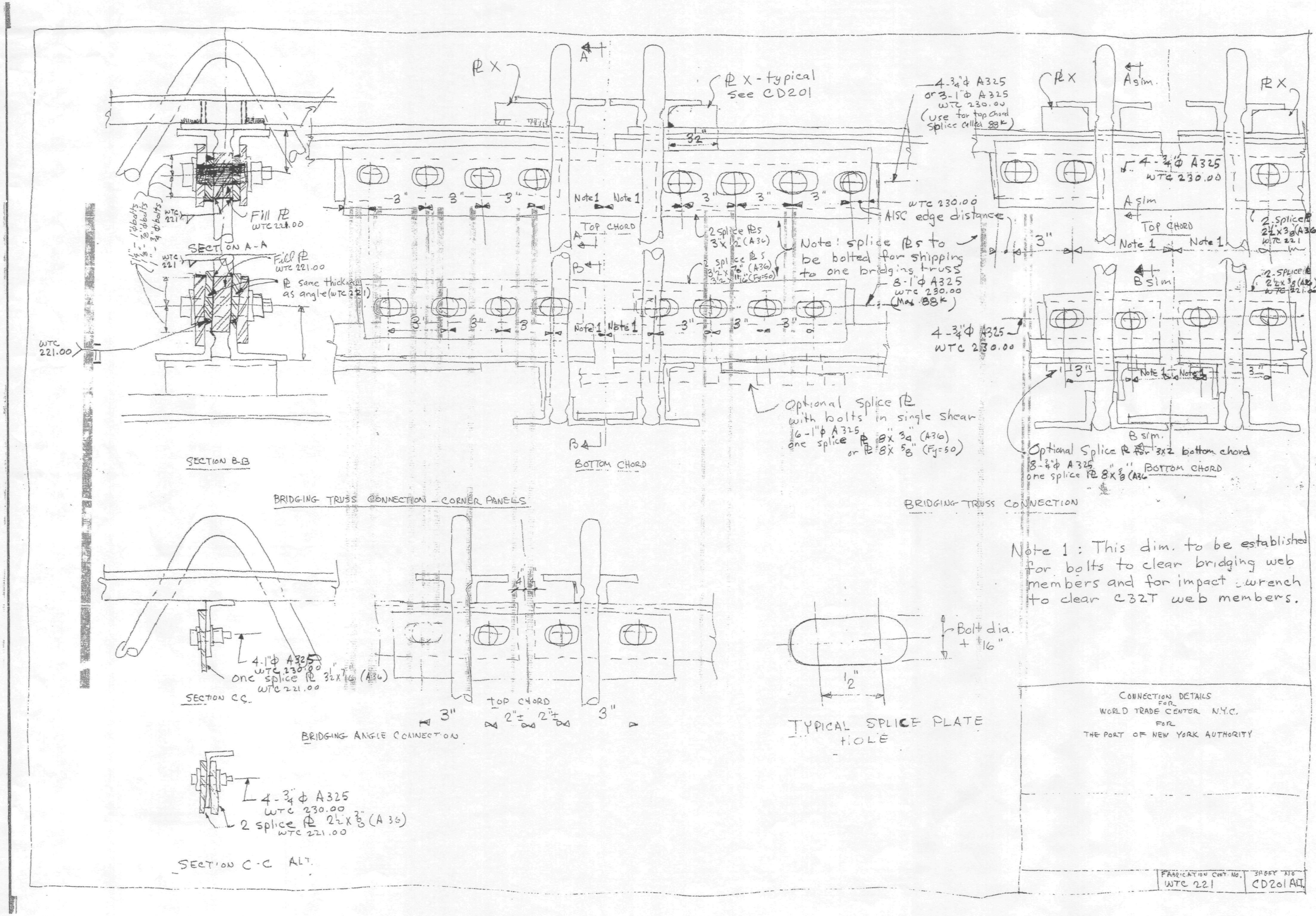

SECTION A-A
Fill PL WTC 221.00
Fill PL WTC 221.00
PL same thickness as angle (WTC 221)
WTC 221.00
SECTION B-B
PL X
PL X - typical See CD201
4-3/4"φ A325 or 3-1"φ A325 WTC 230.00 (use for top chord splice called 88k)
3 1/2"
Note 1
Note 1
TOP CHORD
WTC 230.00
AISC edge distance
2 splice PLs 3" x 1/2" (A36)
2 splice PLs 3 1/2" x 7/8" (A36) 3 1/2" x 11/16" (Fy=50)
Note: splice PLs to be bolted for shipping to one bridging truss
8-1"φ A325 WTC 230.00 (Max 88k)
Optional Splice PL with bolts in single shear 16-1"φ A325 one splice PL 8" x 3/4" (A36) or PL 8" x 5/8" (Fy=50)
BOTTOM CHORD
BRIDGING TRUSS CONNECTION - CORNER PANELS
A sim.
4-3/4"φ A325 WTC 230.00
TOP CHORD
2 splice PL 2 1/2" x 3/8" (A36) WTC 221
B sim.
4-3/4"φ A325 WTC 230.00
Optional Splice PL for 3x2 bottom chord 8-3/4"φ A325 one splice PL 8 x 3/8" (A36)
BOTTOM CHORD
BRIDGING TRUSS CONNECTION
Note 1: This dim. to be established for bolts to clear bridging web members and for impact wrench to clear C32T web members.
4-1"φ A325 WTC 230.00
one splice PL 3 1/2" x 7/16" (A36) WTC 221.00
SECTION C-C
TOP CHORD
BRIDGING ANGLE CONNECTION
Bolt dia. + 1/16"
1/2"
TYPICAL SPLICE PLATE HOLE
4-3/4"φ A325 WTC 230.00
2 splice PL 2 1/2" x 3/8" (A36) WTC 221.00
SECTION C-C ALT.
CONNECTION DETAILS FOR WORLD TRADE CENTER N.Y.C. FOR THE PORT OF NEW YORK AUTHORITY
FABRICATION CONT. NO. WTC 221
SHEET NO. CD201 ALT.

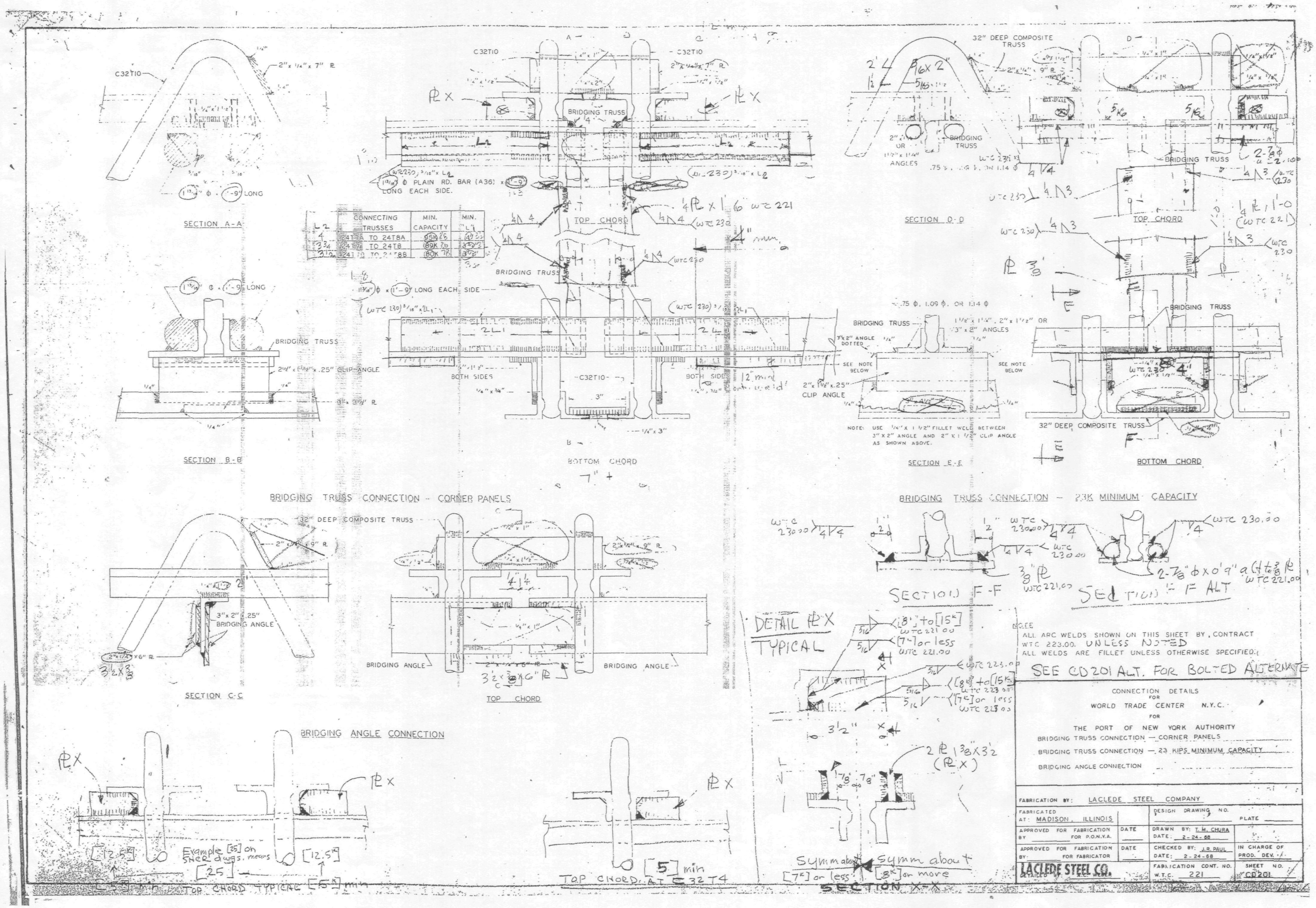

L2	CONNECTING TRUSSES	MIN. CAPACITY	MIN. "L1"
4	24T7A TO 24T8A	95K	4"
3 3/4	24T7 TO 24T8	89K	3 3/4"
3 1/2	24T7B TO 24T8B	80K	3 1/2"

NOTE
ALL ARC WELDS SHOWN ON THIS SHEET BY CONTRACT WTC 223.00. UNLESS NOTED
ALL WELDS ARE FILLET UNLESS OTHERWISE SPECIFIED.

SEE CD201 ALT. FOR BOLTED ALTERNATE

CONNECTION DETAILS
FOR
WORLD TRADE CENTER N.Y.C.
FOR
THE PORT OF NEW YORK AUTHORITY
BRIDGING TRUSS CONNECTION — CORNER PANELS
BRIDGING TRUSS CONNECTION — 23 KIPS MINIMUM CAPACITY
BRIDGING ANGLE CONNECTION

FABRICATION BY: LACLEDE STEEL COMPANY
FABRICATED AT: MADISON, ILLINOIS
DESIGN DRAWING NO. PLATE
APPROVED FOR FABRICATION BY FOR P.O.N.Y.A. DATE
DRAWN BY: T. M. CHURA DATE: 2-24-68
APPROVED FOR FABRICATION BY: FOR FABRICATOR DATE
CHECKED BY: J.R. PAUL DATE: 2-24-68
IN CHARGE OF PROD. DEV.
LACLEDE STEEL CO. DETAILED BY: A.C. WEBER
FABRICATION CONT. NO. W.T.C. 221
SHEET NO. CD201

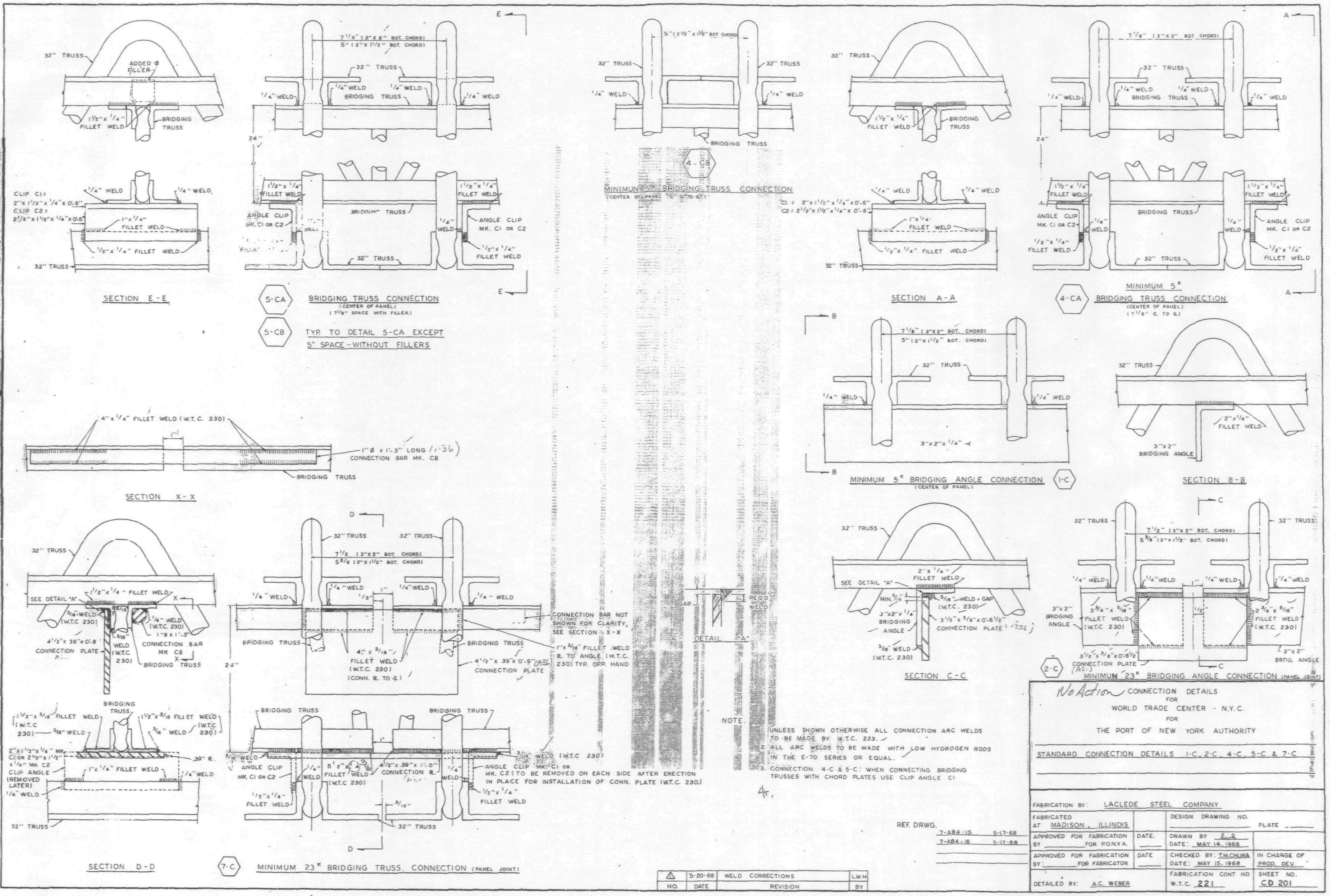

NOTE.

1. UNLESS SHOWN OTHERWISE ALL CONNECTION ARC WELDS TO BE MADE BY W.T.C. 223.
2. ALL ARC WELDS TO BE MADE WITH LOW HYDROGEN RODS IN THE E-70 SERIES OR EQUAL.
3. CONNECTION 4-C & 5-C: WHEN CONNECTING BRIDGING TRUSSES WITH CHORD PLATES USE CLIP ANGLE C1

REF. DRWG.

7-A84-15	5-17-68
7-A84-16	5-17-68

NO.	DATE	REVISION	BY
⚠	5-20-68	WELD CORRECTIONS	L.W.H.

No Action CONNECTION DETAILS FOR WORLD TRADE CENTER - N.Y.C. FOR THE PORT OF NEW YORK AUTHORITY

STANDARD CONNECTION DETAILS 1-C, 2-C, 4-C, 5-C & 7-C

FABRICATION BY: LACLEDE STEEL COMPANY			
FABRICATED AT MADISON, ILLINOIS		DESIGN DRAWING NO.	PLATE
APPROVED FOR FABRICATION BY ____ FOR P.O.N.Y.A.	DATE.	DRAWN BY L.W.H. DATE: MAY 14, 1968	
APPROVED FOR FABRICATION BY ____ FOR FABRICATOR	DATE	CHECKED BY: T.M.CHURA DATE: MAY 15, 1968	IN CHARGE OF PROD. DEV.
DETAILED BY: A.C. WEBER		FABRICATION CONT NO W.T.C. 221	SHEET NO. CD 201

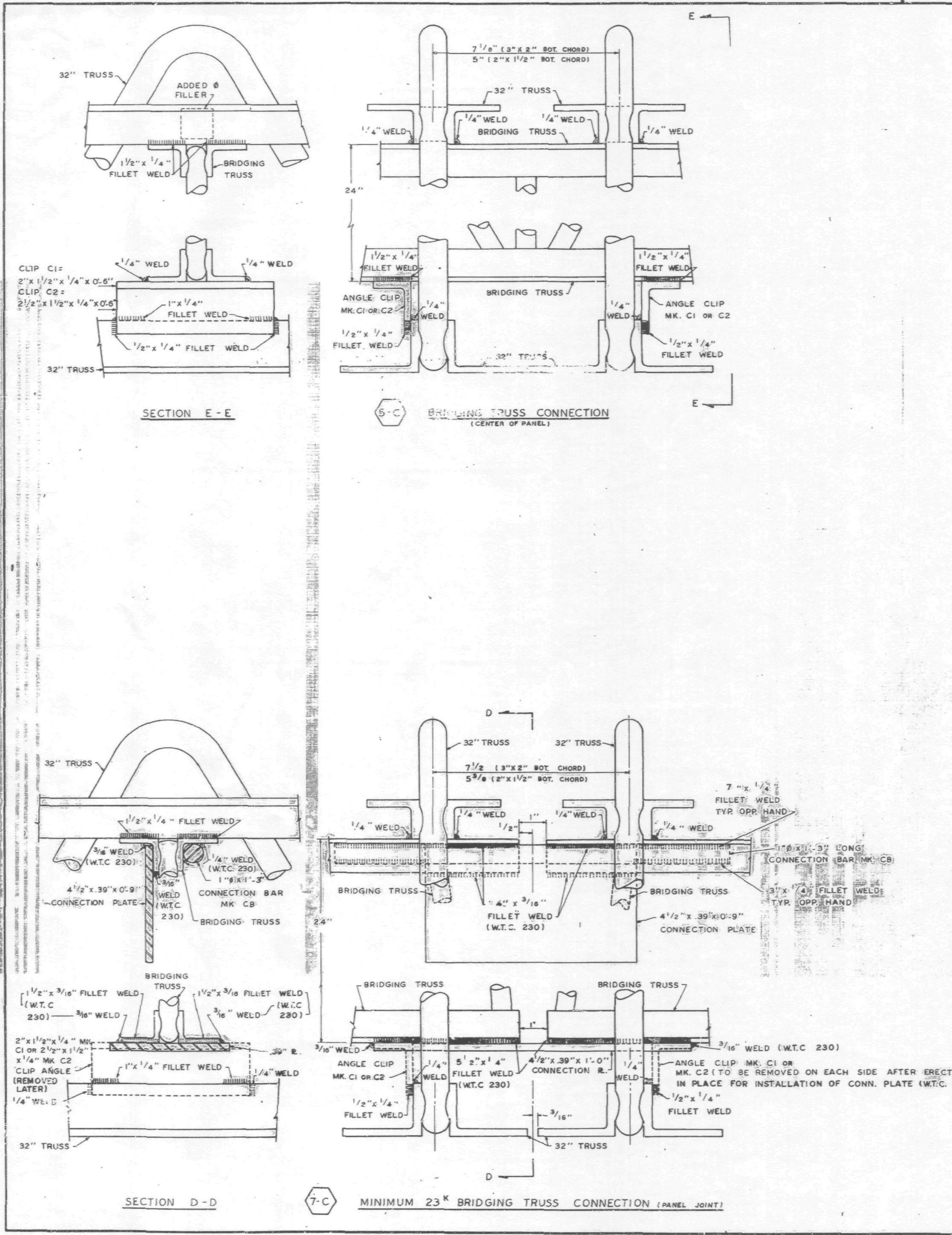

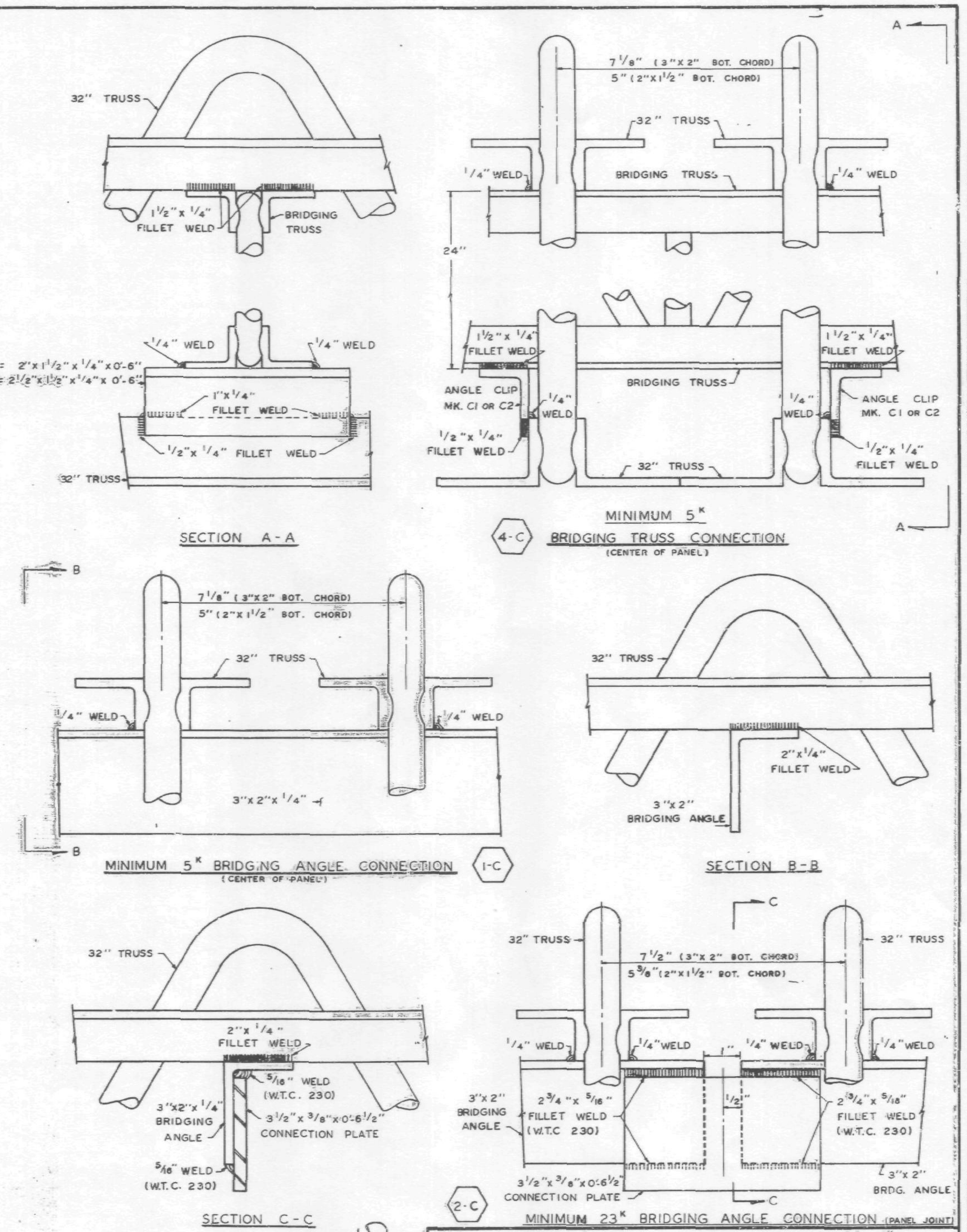

VOID

NOTE.

1. UNLESS SHOWN OTHERWISE ALL CONNECTION ARC WELDS TO BE MADE BY W.T.C. 223.
2. ALL ARC WELDS TO BE MADE WITH LOW HYDROGEN RODS IN THE E-70 SERIES OR EQUAL.
3. CONNECTION 4-C & 5-C: WHEN CONNECTING BRIDGING TRUSSES WITH CHORD PLATES USE CLIP ANGLE C1.

REF. DRWG.

7-A84-15	5-6-68
7-A84-16	5-6-68

CONNECTION DETAILS
FOR
WORLD TRADE CENTER - N.Y.C.
FOR
THE PORT OF NEW YORK AUTHORITY

5/17/68

STANDARD CONNECTION DETAILS 1-C, 2-C, 4-C, 5-C & 7-C

FABRICATION BY: LACLEDE STEEL COMPANY			
FABRICATED AT: MADISON, ILLINOIS		DESIGN DRAWING NO.	PLATE
APPROVED FOR FABRICATION BY: FOR P.O.N.Y.A.	DATE.	DRAWN BY: [illegible] DATE: MAY 14, 1968	
APPROVED FOR FABRICATION BY: FOR FABRICATOR	DATE	CHECKED BY: T.M.CHURA DATE: MAY 15, 1968	IN CHARGE OF PROD. DEV.
DETAILED BY: A.C. WEBER		FABRICATION CONT. NO. W.T.C. 221	SHEET NO. CD 201

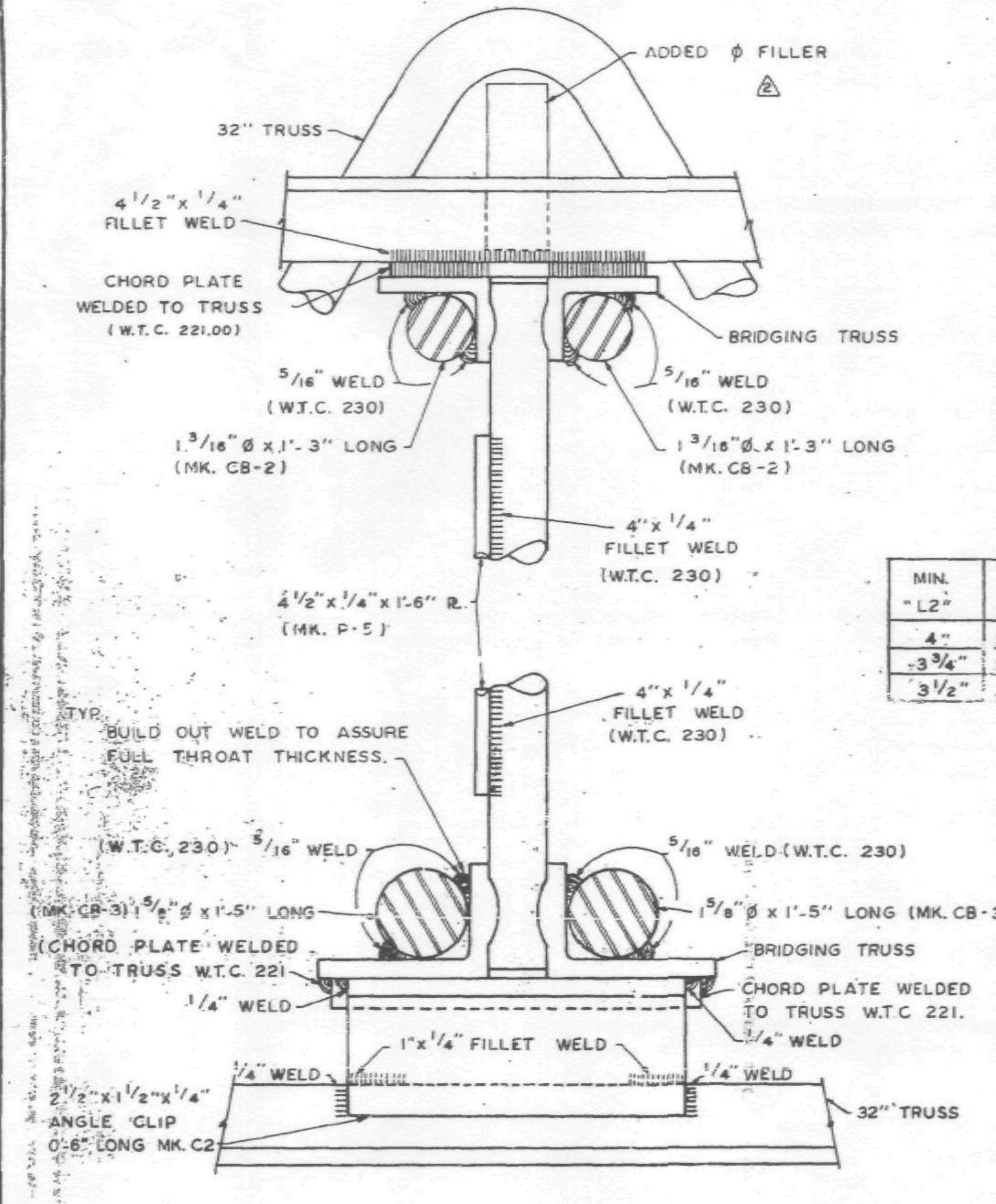

SECTION F-F

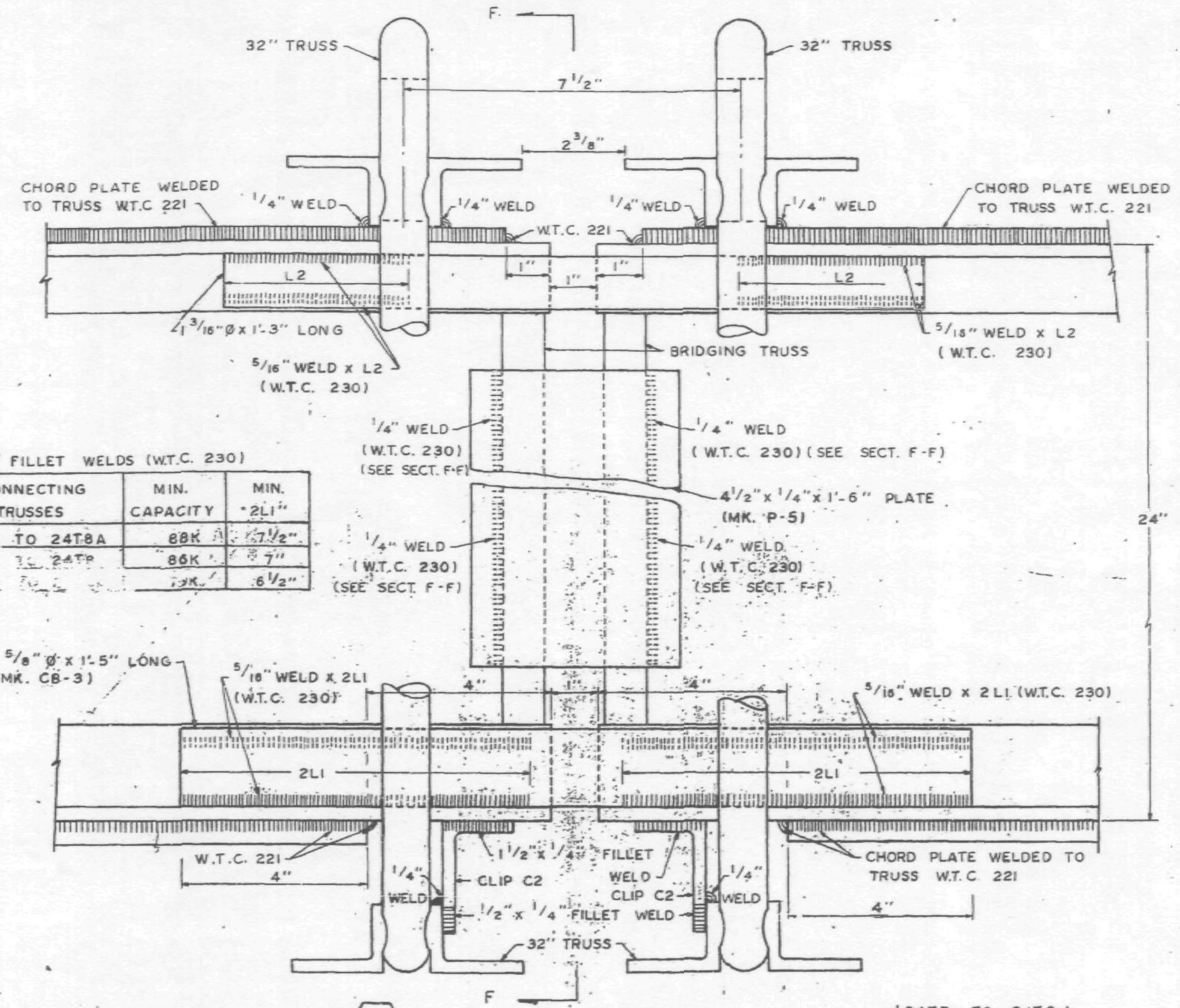

10-C CONNECTION DETAIL PANEL JOINT (24T7 TO 24T8, 24T7A TO 24T8A, 24T7B TO 24T8B)

5/16" FILLET WELDS (W.T.C. 230)

MIN. "L2"	CONNECTING TRUSSES	MIN. CAPACITY	MIN. "2L1"
4"	24T7A TO 24T8A	88K	7 1/2"
3 3/4"	[illegible] TO 24T8	86K	7"
3 1/2"	[illegible]	[illegible]K	6 1/2"

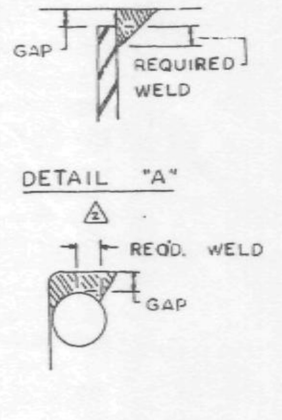

DETAIL "A"

DETAIL "B"

LIST OF FLOOR CONNECTION IDENTIFICATIONS

Connection Designation	Description	Drawing No.
1C	Connection of 3" x 2" x 1/4" Bridging Angles with C32 Trusses at Interior Panel Joints	CD 201
2C	Connection of 3" x 2" x 1/4" Bridging Angles with C32 Trusses at Panel Joints (Except Special Cases 13C, 14C & 15C)	CD 201
3C	Connection of 3" x 2" x 1/4" Bridging Angles with C32T4	CD 204
4CA	Connection of 24T Bridging Trusses with C32 Trusses at Interior Panel Joints (Panels A, B, BR, C and CR)	CD 201
4CB	Connection of 24T Bridging Trusses with C32 Trusses at Interior Panel Joints (Panels H, HR, J, K, KR, M and MR)	CD 201
5C	Connection of 24T Bridging Trusses with C32 Trusses at Interior Panel Joints (Panels D, DR, E, ER, F, FR, G and GR except 6-C Connections in Panel F and FR)	CD 201
6C	Connection of 24T7, 24T7A, 24T7B and 24T14 to the C32T4	CD 201
7C	Connection of 24T Bridging Trusses with C32 Trusses at Panel Joints Except Special Cases 8C, 10C &11C. 16C & 17C	CD 201
8C	Connections of the following Bridging Trusses at Panel Joints 24T8 to 24T10 24T8A to 24T10A 24T8B to 24T10B	CD 202
9C	Connections of the following Bridging Trusses at Panel Joints 24T9 to 24T11A 24T9A to 24T11A	CD 2[illegible]
10C	Connections of the following Bridging Trusses at Panel Joints 24T8 to 24T7 24T8A to 24T7A 24T8B to 24T7B	CD 202
11C	Connection of 24T12 or 24T13B Bridging Truss with the 24T10, 24T10A or 24T10B Bridging at Panel Joints	CD 204
12C	Reserved	
13C	Connection of 3" x 2" x 1/4" Bridging Angle at double C32T6 Trusses with double C32T3 Trusses	CD 209
14C	Connection of 3" x 2" x 1/4" Bridging Angle at double C32T6 Trusses with double C32T10 Trusses	CD 207
15C	Connection of 3" x 2" x 1/4" Bridging Angle at double C32T6 Trusses with a C32T4 Truss	CD 205
16C	Connection of 24T9 Bridging Truss at double C32T6 Trusses with double C32T9 Trusses	CD 208
17C	Connection of 24T9A Bridging Truss at double C32T6 Trusses with double C32T11 Trusses	CD 206
18C	Connection of 3" x 2" x 1/4" Bridging Angle with the double C32T3 trusses in Panel E & ER at second line of bridging from core end	CD 204
19C	Connection of 3" x 2" x 1/4" Bridging Angle with the double C32T2 Trusses at the Panel Joint of Panels E to Panel D or Panel ER to Panel DR at second line of bridging from core end	CD 204

REF. DRWG.

7-AB4-18	5-6-68
7-AB4-18.1	5-6-68

NOTE.

1. UNLESS SHOWN OTHERWISE ALL CONNECTION ARC WELDS TO BE MADE BY W.T.C. 223.
2. ALL ARC WELDS TO BE MADE WITH LOW HYDROGEN RODS IN THE E-70 SERIES OR EQUAL.
3. ALL PLATES & ø SPLICE BARS TO BE ASTM A36

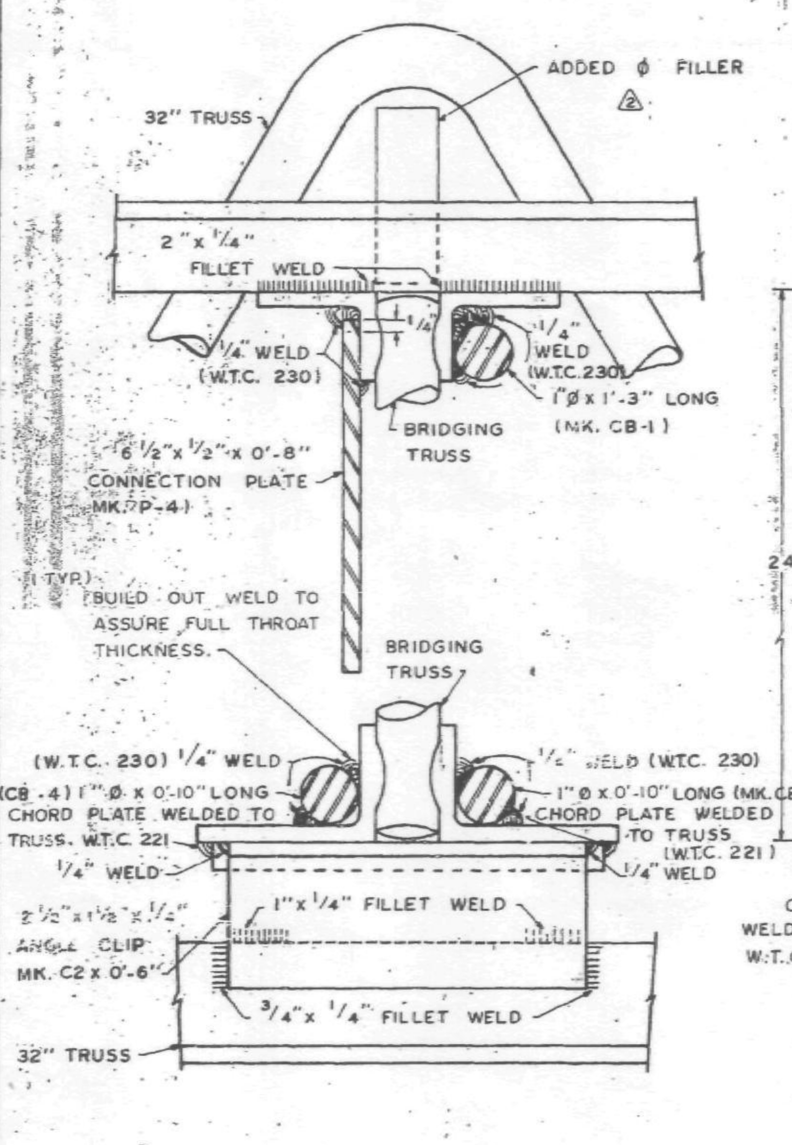

SECTION G-G

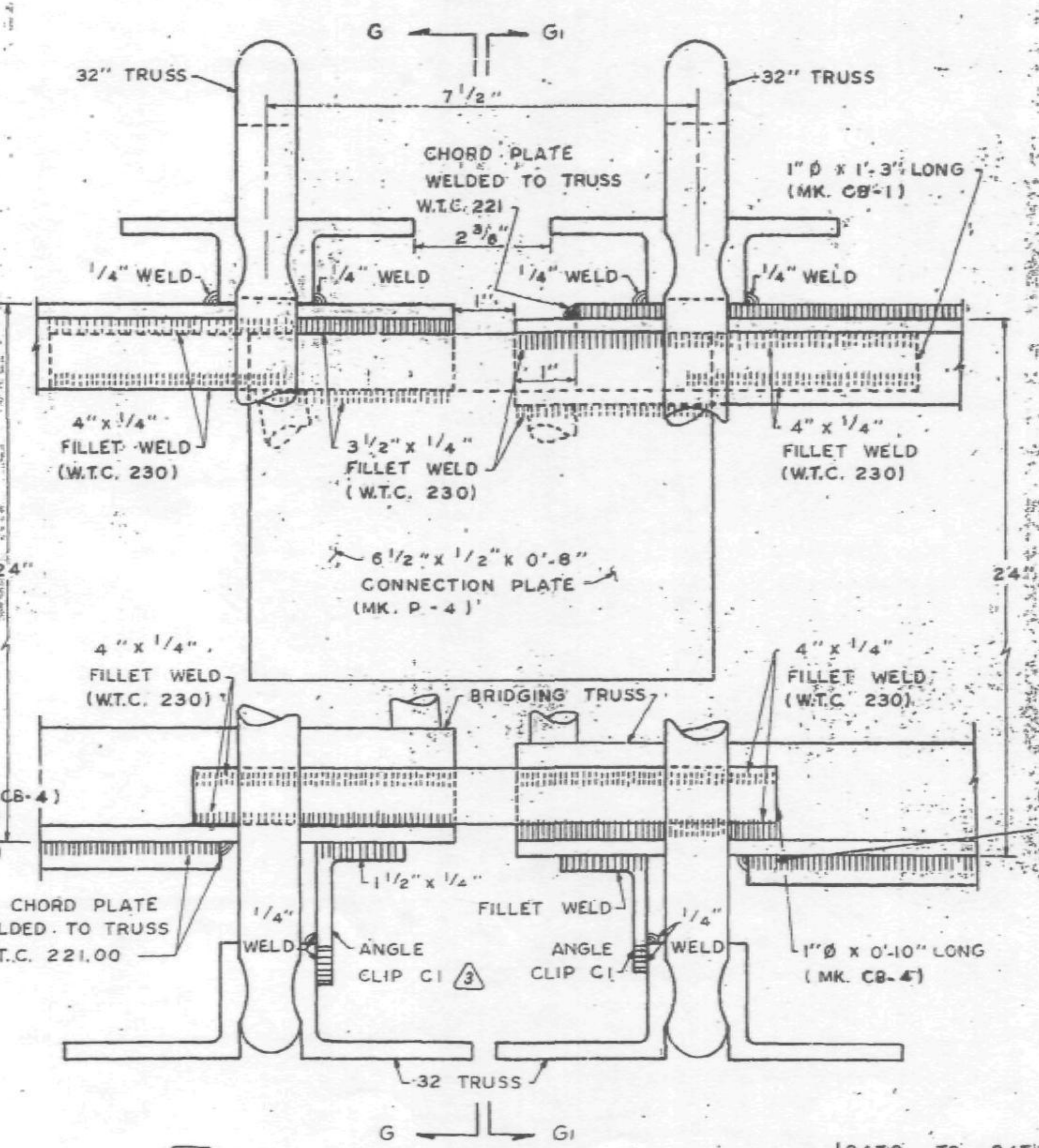

8-C CONNECTION DETAIL PANEL JOINT (24T8 TO 24T10, 24T8A TO 24T10A, 24T8B TO 24T10B)

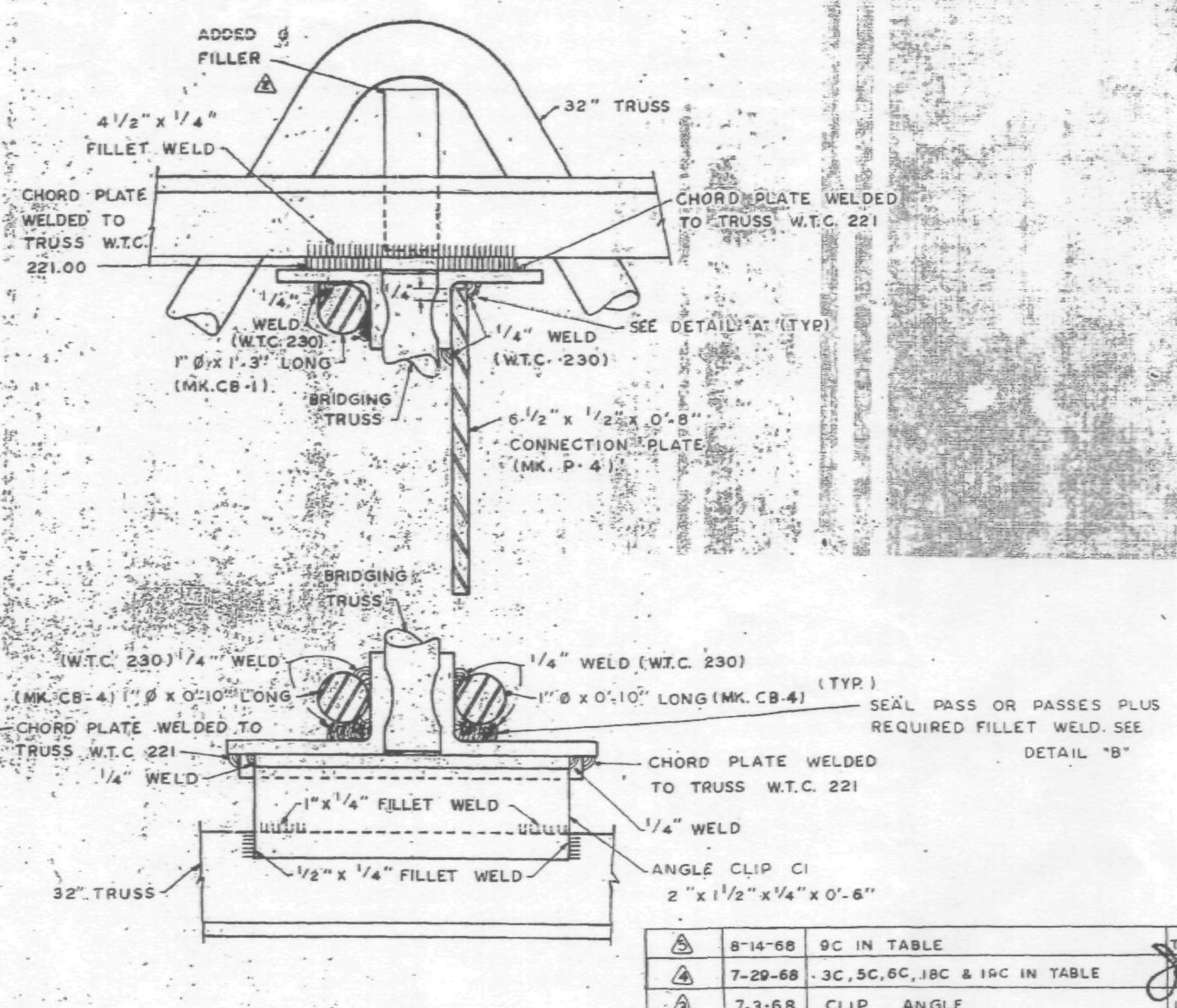

SECTION G1-G1

NO.	DATE	REVISION	BY
5	8-14-68	9C IN TABLE	T.M.C.
4	7-29-68	3C, 5C, 6C, 18C & 19C IN TABLE	
3	7-3-68	CLIP ANGLE	L.W.H
2	6-24-68	AS NOTED	L.W.H
1	5-20-68	WELD-CORRECTIONS	L.W.H

CONNECTION DETAILS
FOR
WORLD TRADE CENTER - N.Y.C.
FOR
THE PORT OF NEW YORK AUTHORITY

STANDARD CONNECTION DETAILS 8C, 10-C

FABRICATION BY: LACLEDE STEEL COMPANY

FABRICATED AT: MADISON, ILLINOIS

DESIGN DRAWING NO. ____ PLATE ____

APPROVED FOR FABRICATION BY: [signature] FOR P.O.N.Y.A. DATE 8/29/68

DRAWN BY: [initials] DATE: MAY 14, 1968

APPROVED FOR FABRICATION BY: ____ FOR FABRICATOR DATE ____

CHECKED BY: T.M.CHURA DATE: MAY 15, 1968

IN CHARGE OF PROD. DEV.

DETAILED BY: A.C. WEBER

FABRICATION CONT. NO W.T.C. 221

SHEET NO. CD 202

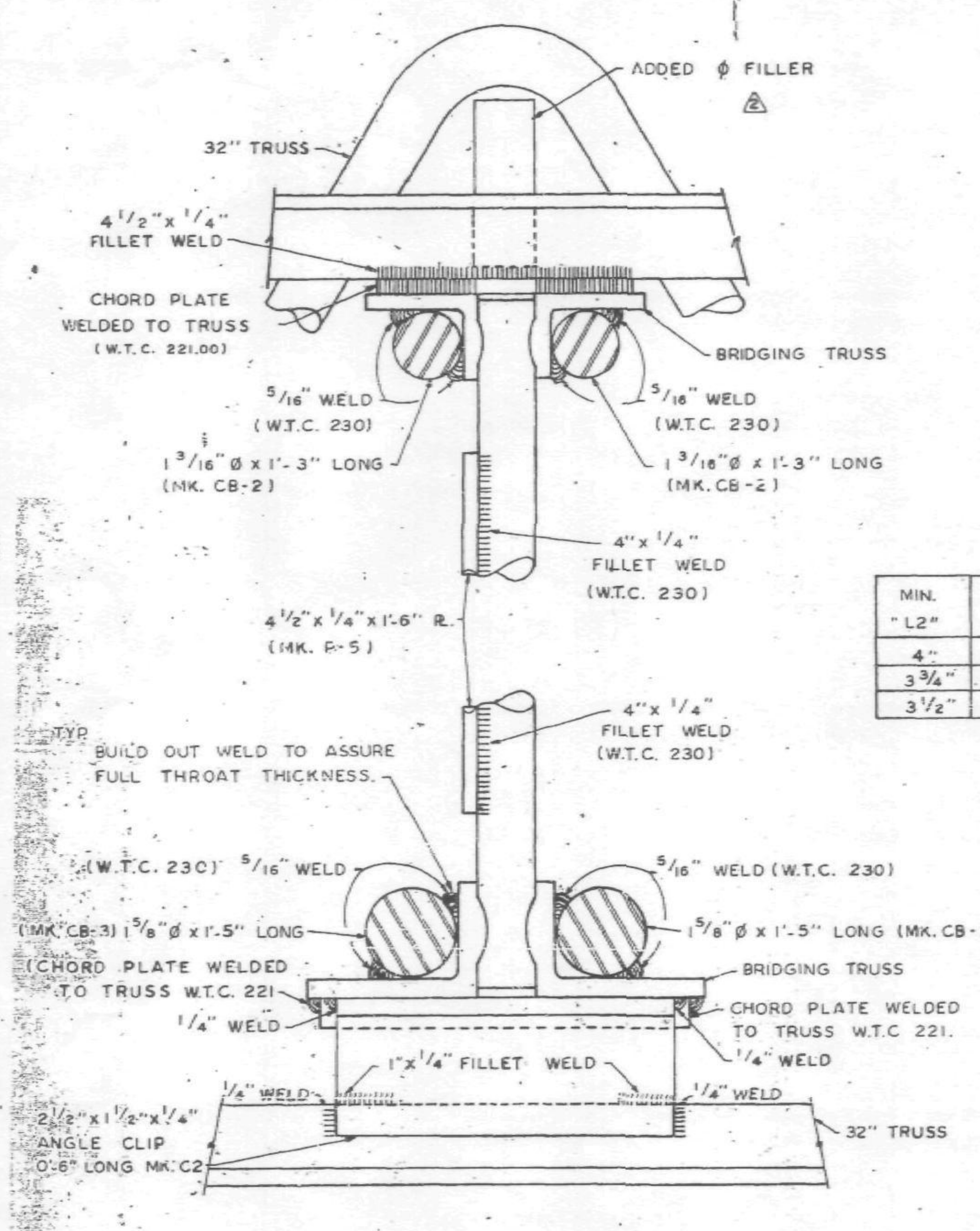

SECTION F-F ⚠2

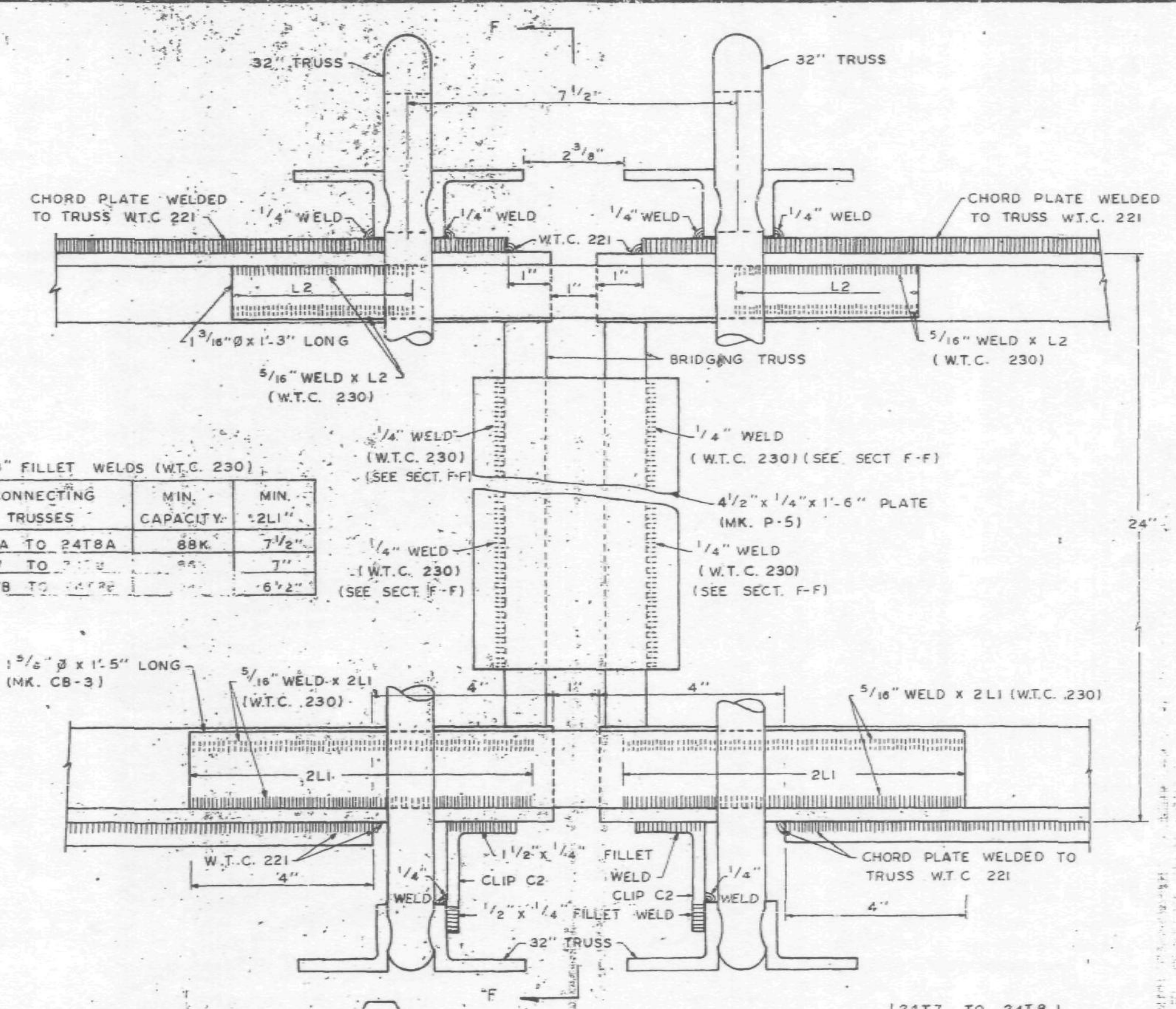

5/16" FILLET WELDS (W.T.C. 230)

MIN. "L2"	CONNECTING TRUSSES	MIN. CAPACITY	MIN. "2L1"
4"	24T7A TO 24T8A	88K	7 1/2"
3 3/4"	24T7 TO [illegible]	[illegible]	7"
3 1/2"	24T7B TO [illegible]	[illegible]	6 1/2"

⚠ (10-C) CONNECTION DETAIL PANEL JOINT (24T7 TO 24T8, 24T7A TO 24T8A, 24T7B TO 24T8B)

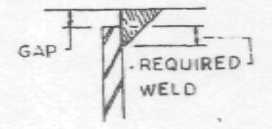

DETAIL "A" ⚠

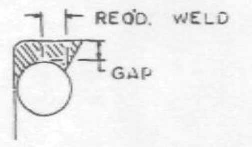

DETAIL "B" ⚠

LIST OF FLOOR CONNECTION IDENTIFICATIONS

Connection Designation	Description	Drawing No.
1C	Connection of 3" x 2" x 1/4" Bridging Angles with C32 Trusses at Interior Panel Joints	CD 201
2C	Connection of 3" x 2" x 1/4" Bridging Angles with C32 Trusses at Panel Joints (Except Special Cases 13C, 14C & 15C)	CD 201
⚠4 3C	Connection of 3" x 2" x 1/4" Bridging Angles with C32T4	CD 204
4CA	Connection of 24T Bridging Trusses with C32 Trusses at Interior Panel Joints (Panels A, B, BR, C and CR)	CD 201
4CB	Connection of 24T Bridging Trusses with C32 Trusses at Interior Panel Joints (Panels H, HR, J, K, KR, M and MR)	CD 201
⚠4 5C	Connection of 24T Bridging Trusses with C32 Trusses at Interior Panel Joints (Panels D, DR, E, ER, F, FR, G and GR except 6-C connections in Panel F and FR)	CD 201
⚠4 6C	Connection of 24T7, 24T7A, 24T7B and 24T14 to the C32T4	CD 201
7C	Connection of 24T Bridging Trusses with C32 Trusses at Panel Joints Except Special Cases 8C, 10C &11C. 16C & 17C	CD 201
8C	Connections of the following Bridging Trusses at Panel Joints: 24T8 to 24T10; 24T8A to 24T10A; 24T8B to 24T10B	CD 202
9C	Reserved	
10C	Connections of the following Bridging Trusses at Panel Joints: 24T to 24T7; 24T6A to 24T7A; 24T6B to 24T7B	CD 202
11C	Connection of 24T12 or 24T13B Bridging Truss with the 24T10, 24T10A or 24T10B Bridging at Panel Joints	CD 204
12C	Reserved	
13C	Connection of 3" x 2" x 1/4" Bridging Angle at double C32T6 Trusses with double C32T3 Trusses	CD 20[illegible]
14C	Connection of 3" x 2" x 1/4" Bridging Angle at double C32T6 Trusses with double C32T10 Trusses	CD 20[illegible]
15C	Connection of 3" x 2" x 1/4" Bridging Angle at double C32T6 Trusses with a C32T4 Truss	CD 205
16C	Connection of 24T9 Bridging Truss at double C32T6 Trusses with double C32T9 Trusses	CD 206
17C	Connection of 24T9A Bridging Truss at double C32T6 Trusses with double C32T11 Trusses	CD 206
⚠4 18C	Connection of 3" x 2" x 1/4" Bridging Angle with the double C32T3 trusses in Panel E & ER at second line of Bridging from core end	CD 204
⚠4 19C	Connection of 3" x 2" x 1/4" Bridging Angle with the double C32T2 Trusses at the Panel Joint of Panels E to Panel D or Panel ER to Panel DR at second line of bridging from core end	CD 204

REF. DRWG.

7-AB4-18	5-6-68
7-AB4-18.1	5-6-68

NOTE:
1. UNLESS SHOWN OTHERWISE ALL CONNECTION ARC WELDS TO BE MADE BY W.T.C. 223.
2. ALL ARC WELDS TO BE MADE WITH LOW HYDROGEN RODS IN THE E-70 SERIES OR EQUAL.
⚠2 3. ALL PLATES & Ø SPLICE BARS TO BE ASTM A36

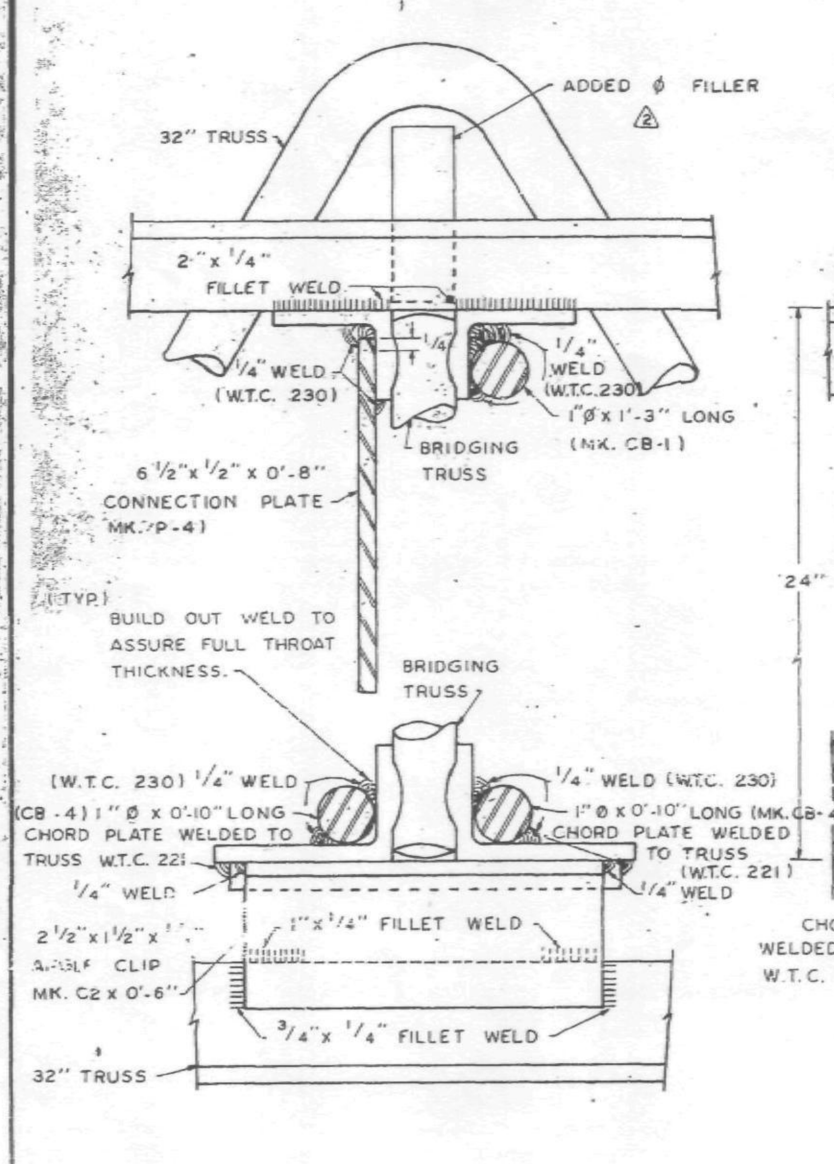

SECTION G-G ⚠2

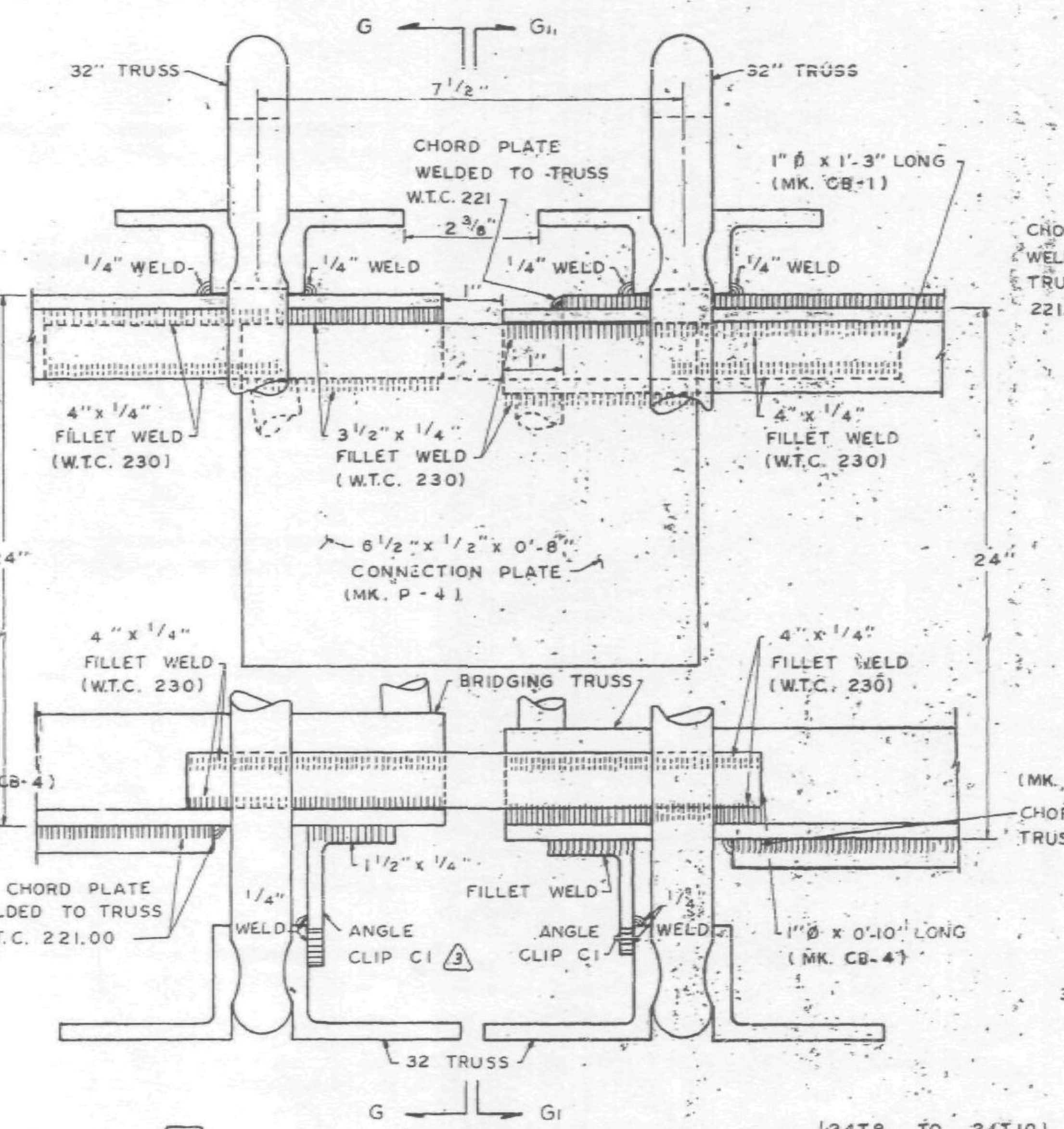

⚠ (8-C) CONNECTION DETAIL PANEL JOINT (24T8 TO 24T10, 24T8A TO 24T10A, 24T8B TO 24T10B)

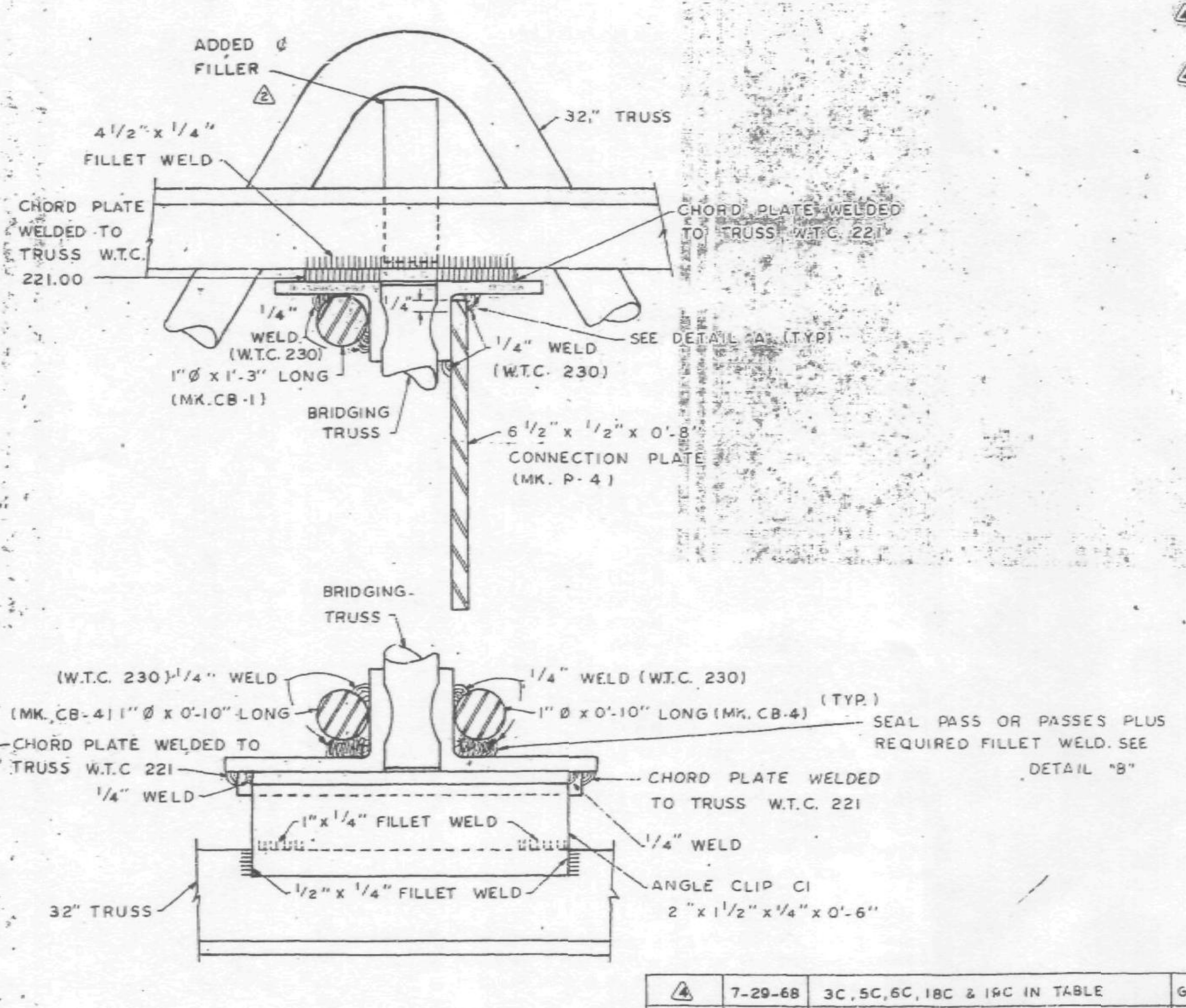

⚠ SECTION G1-G1

CONNECTION DETAILS FOR WORLD TRADE CENTER - N.Y.C. FOR THE PORT OF NEW YORK AUTHORITY

STANDARD CONNECTION DETAILS 8C, 10-C

No.	Date	Revision	By
⚠4	7-29-68	3C, 5C, 6C, 18C & 19C IN TABLE	G.D.C.
⚠3	7-3-68	CLIP ANGLE	L.W.H.
⚠2	6-24-68	AS NOTED	L.W.H.
⚠	5-20-68	WELD CORRECTIONS	L.W.H.

FABRICATION BY: LACLEDE STEEL COMPANY
FABRICATED AT: MADISON, ILLINOIS
DESIGN DRAWING NO. ____ PLATE ____
APPROVED FOR FABRICATION BY: ____ FOR P.O.N.Y.A — DATE 8/16/68
DRAWN BY: [illegible] DATE: MAY. 14, 1968
APPROVED FOR FABRICATION BY ____ FOR FABRICATOR — DATE
CHECKED BY: T.M.CHURA DATE: MAY. 15, 1968
IN CHARGE OF PROD. DEV.
DETAILED BY: A.C. WEBER
FABRICATIC. CONT. NO W.T.C. 221
SHEET NO. CD 202

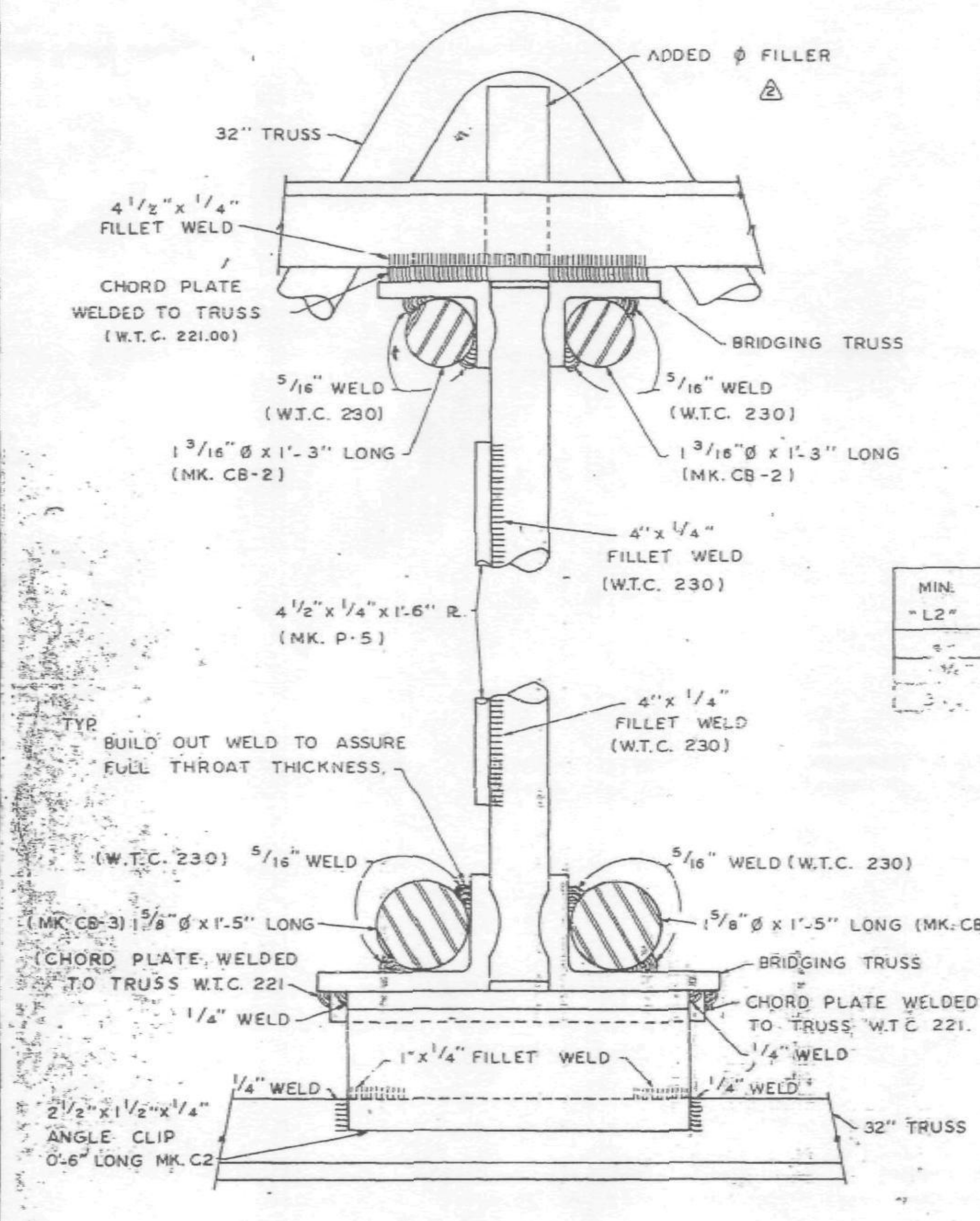

SECTION F-F

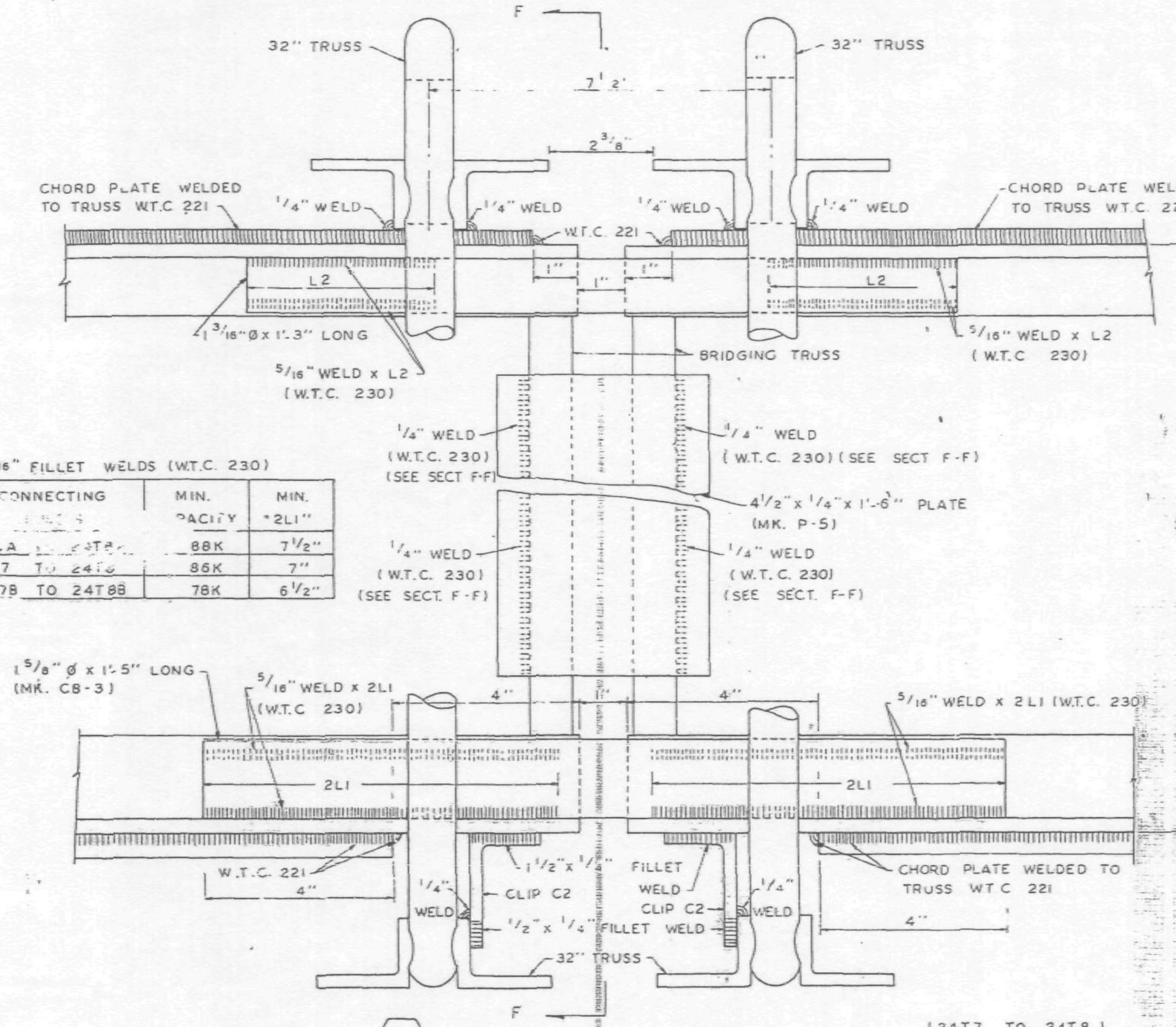

10-C CONNECTION DETAIL PANEL JOINT

24T7 TO 24T8
24T7A TO 24T8A
24T7B TO 24T8B

5/16" FILLET WELDS (W.T.C. 230)

MIN. "L2"	CONNECTING [illegible]	MIN. [illegible]PACITY	MIN. "2L1"
[illegible]	24T.A [illegible]	88K	7 1/2"
[illegible]	24T7 TO 24T8	86K	7"
[illegible]	24T7B TO 24T8B	78K	6 1/2"

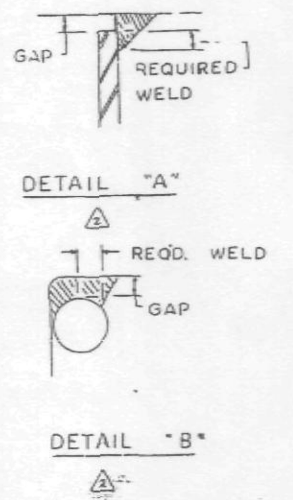

DETAIL "A"

DETAIL "B"

LIST OF FLOOR CONNECTION IDENTIFICATIONS

Connection Designation	Description	Drawing No.
1[illegible]	[illegible] Bridging Angles [illegible] Panel Joints	[illegible] 201
[illegible]	Connection of [illegible] Bridging Angles with C3[illegible] Trusses at Panel Joints (Except Special Cases [illegible] 14C & 15C)	CD 201
[illegible]	Reserved	
[illegible]	Connection of 24T Bridging Trusses with C32 Trusses at Interior Panel Joints (Panels A, B, BR, C and CR)	[illegible] 2.1
[illegible]	Connection of 24T Bridging Trusses with C32 Trusses at Interior Panel Joints (Panels H, HR, J, [illegible], M and MR)	CD 201
5C	Connection of 24T Bridging Trusses with C32 Trusses at Interior Panel Joints (Panels D, DR, E, ER, F, FR, G and GR)	CD 201
6C	Reserved	
7C	Connection of 24T Bridging Trusses with C32 Trusses at Panel Joints Except Special Cases 8C, 10C & 11C, 16C & 17C	CD 201
8C	Connections of the following Bridging Trusses at Panel Joints 24T8 to 24T10 24T8A to 24T10A 24T8B to 24T10B	CD 202
9C	Reserved	
10C	Connections of the following Bridging Trusses at Panel Joints 24T8 to 24T7 24T8A to 24T7A 24T8B to 24T7B	CD 202
11C	Connection of 24T12 or 24T13B Bridging Truss with the 24T10, 24T10A or 24T10B Bridging at Panel Joints	CD 204
12C	Reserved	
13C	Connection of 3" x 2" x 1/4" Bridging Angle at double C32T6 Trusses with double C32T8 Trusses	CD 209
14C	Connection of 3" x 2" x 1/4" Bridging Angle at double C32T6 Trusses with double C32T10 Trusses	CD 207
15C	Connection of 3" x 2" x 1/4" Bridging Angle at double C32T6 Trusses with a C32T4 Truss	CD 205
16C	Connection of 24T9 Bridging Truss at double C32T6 Trusses with double C32T9 Trusses	CD 208
17C	Connection of 24T9A Bridging Truss at double C32T6 Trusses with double C32T11 Trusses	CD 206

REF. DRWG.

7-AB4-18	5-6-68
7-AB4-18.1	5-6-68

NOTE:
1. UNLESS SHOWN OTHERWISE ALL CONNECTION ARC WELDS TO BE MADE BY W.T.C. 223.
2. ALL ARC WELDS TO BE MADE WITH LOW HYDROGEN RODS IN THE E-70 SERIES OR EQUAL.
3. ALL PLATES & Ø SPLICE BARS TO BE ASTM A36

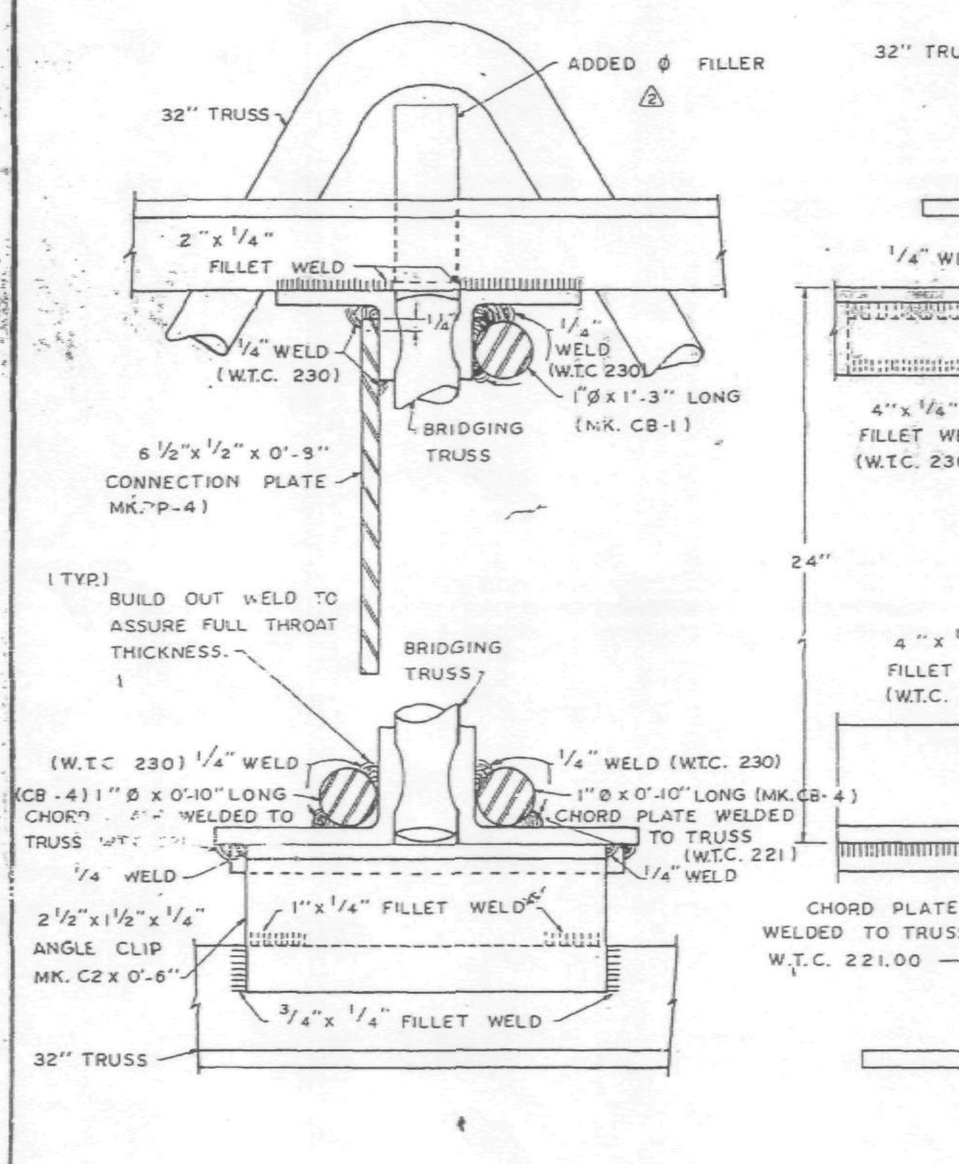

SECTION G-G

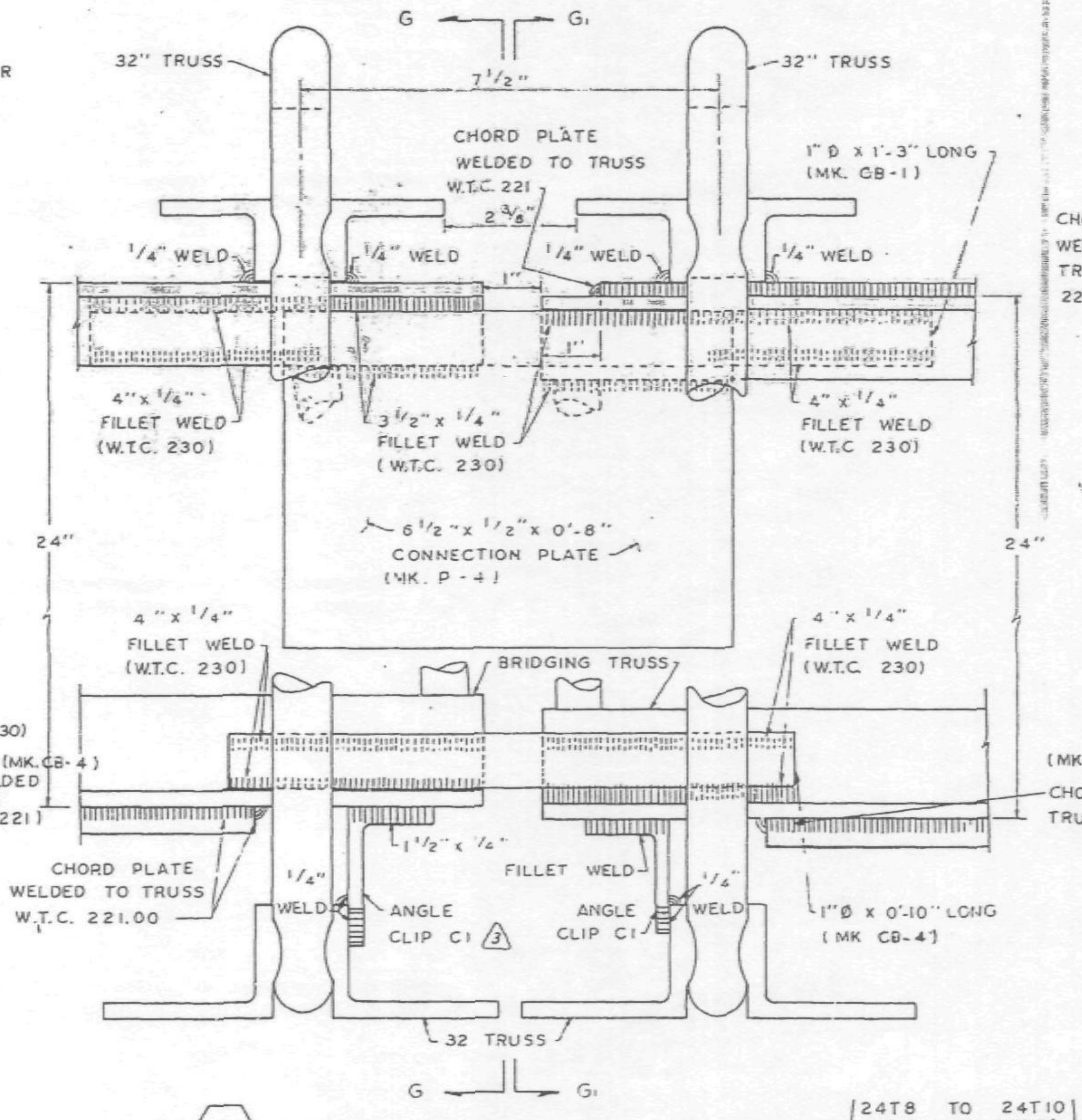

8-C CONNECTION DETAIL PANEL JOINT

24T8 TO 24T10
24T8A TO 24T10A
24T8B TO 24T10B

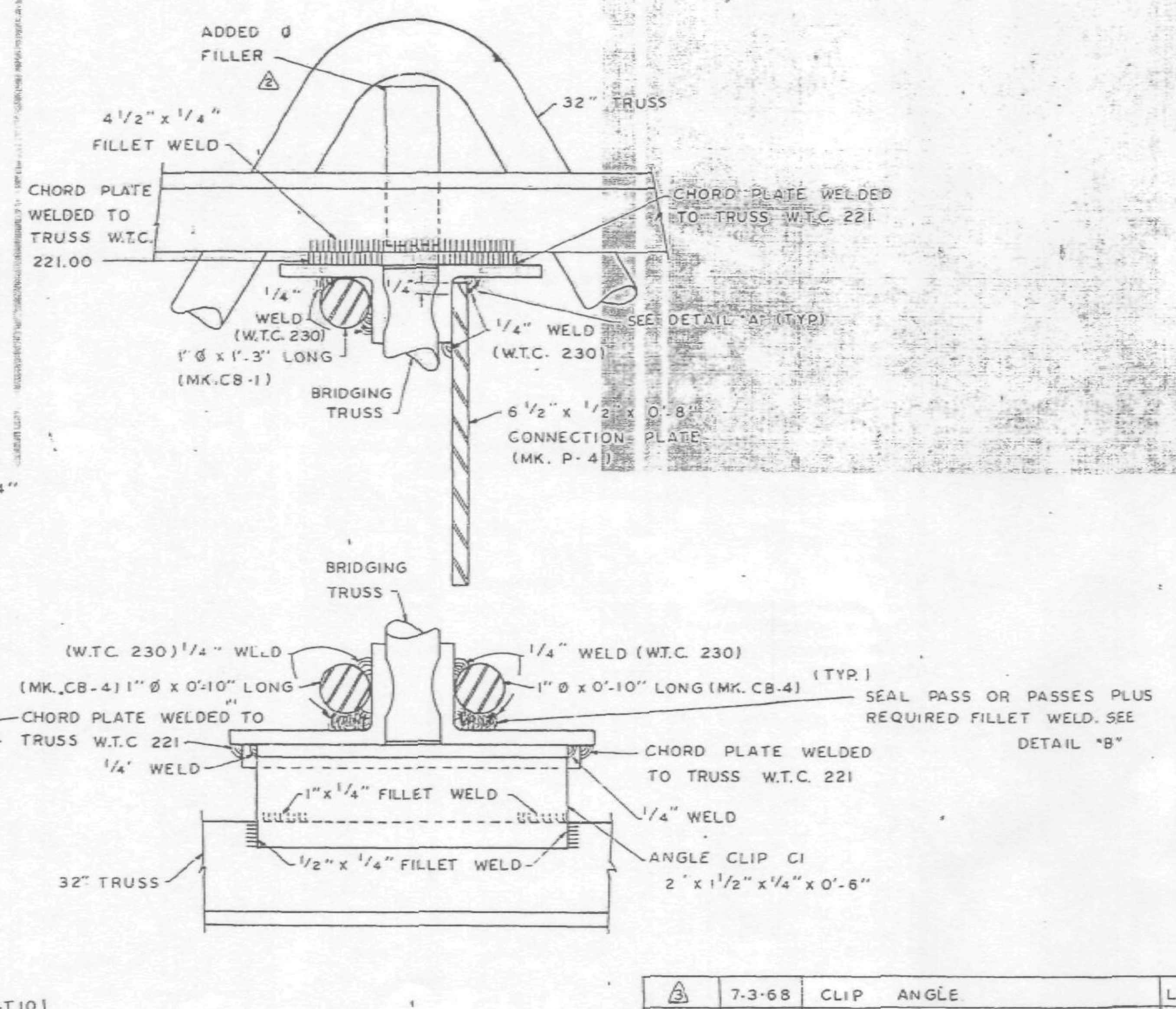

SECTION G1 - G1

CONNECTION DETAILS FOR WORLD TRADE CENTER - N.Y.C. FOR THE PORT OF NEW YORK AUTHORITY

STANDARD CONNECTION DETAILS 8C, 10-C

NO.	DATE	REVISION	BY
3	7-3-68	CLIP ANGLE	L.W.H.
2	6-24-68	AS NOTED	L.W.H.
1	5-20-68	WELD CORRECTIONS	L.W.H.

FABRICATION BY: LACLEDE STEEL COMPANY
FABRICATED AT: MADISON, ILLINOIS
DESIGN DRAWING NO. ______ PLATE ______
APPROVED FOR FABRICATION BY: [illegible] FOR P.O.N.Y.A. DATE 7/12/68
APPROVED FOR FABRICATION BY ______ FOR FABRICATOR DATE
DRAWN BY: [illegible] DATE: MAY 14, 1968
CHECKED BY: T.M. CHURA DATE: MAY 15, 1968
IN CHARGE OF PROD. DEV.
DETAILED BY: A.C. WEBER
FABRICATION CONT. NO. W.T.C. 221
SHEET NO. CD 202

Note X: Hold for determination of Plate "x" requirements

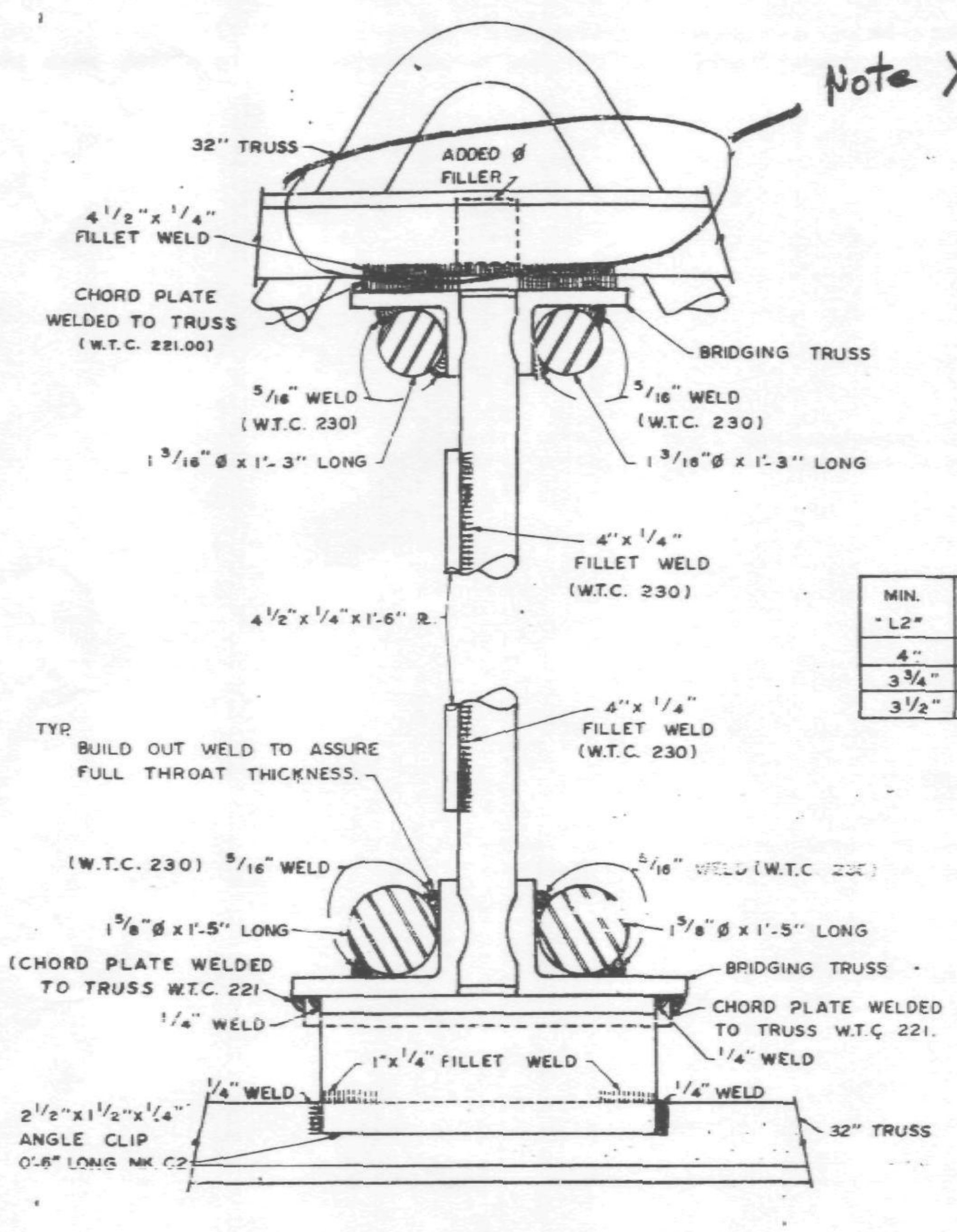

SECTION F-F

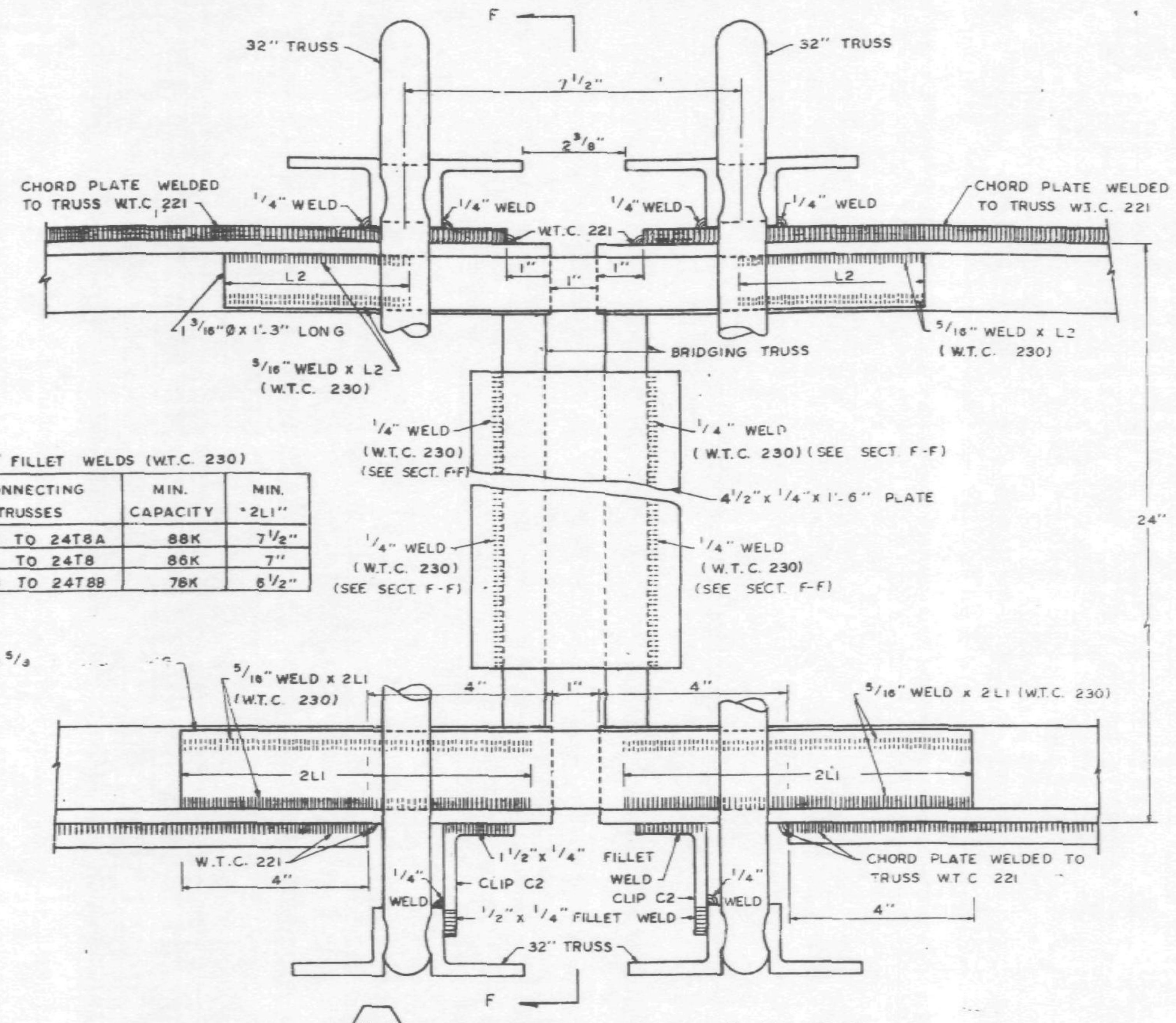

10-C CONNECTION DETAIL PANEL JOINT

5/16" FILLET WELDS (W.T.C. 230)

MIN. "L2"	CONNECTING TRUSSES	MIN. CAPACITY	MIN. "2L1"
4"	24T7A TO 24T8A	88K	7 1/2"
3 3/4"	24T7 TO 24T8	86K	7"
3 1/2"	24T7B TO 24T8B	78K	6 1/2"

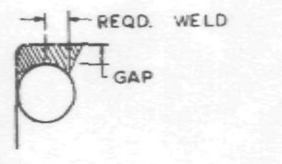

DETAIL "B"

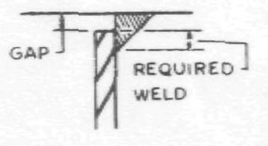

DETAIL "A"

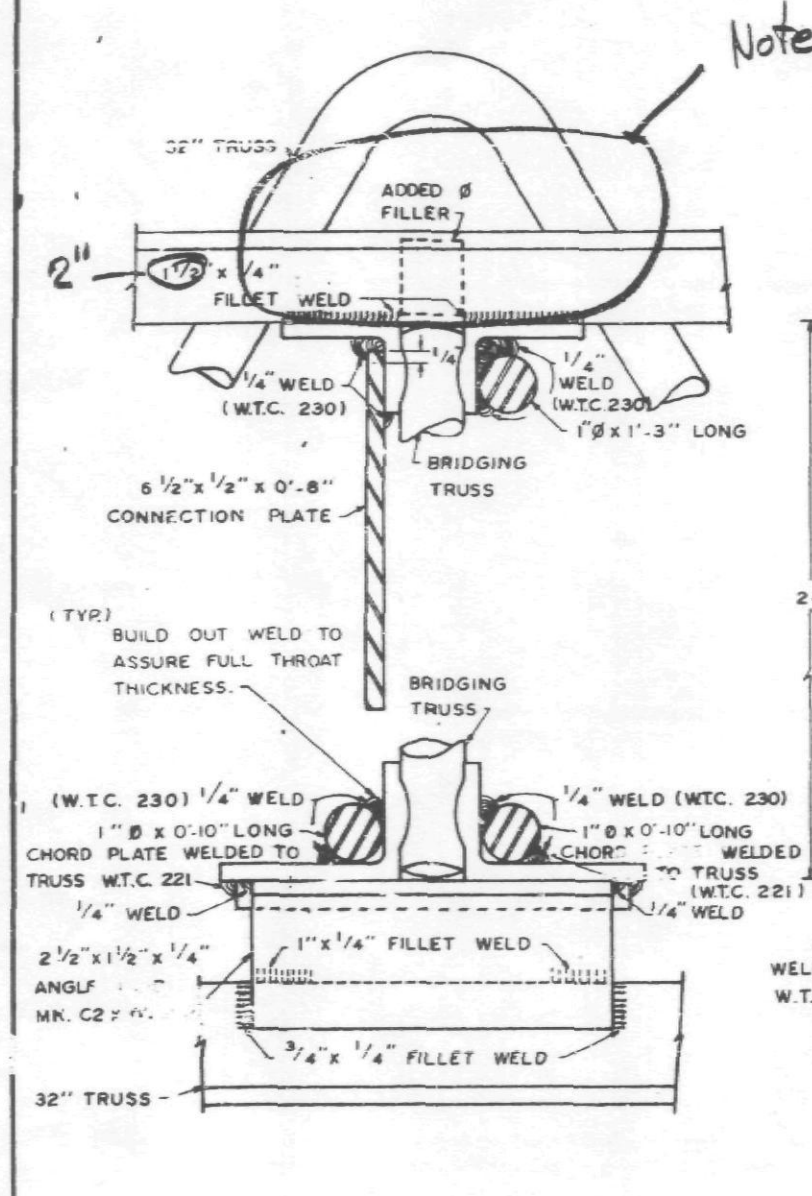

SECTION G-G

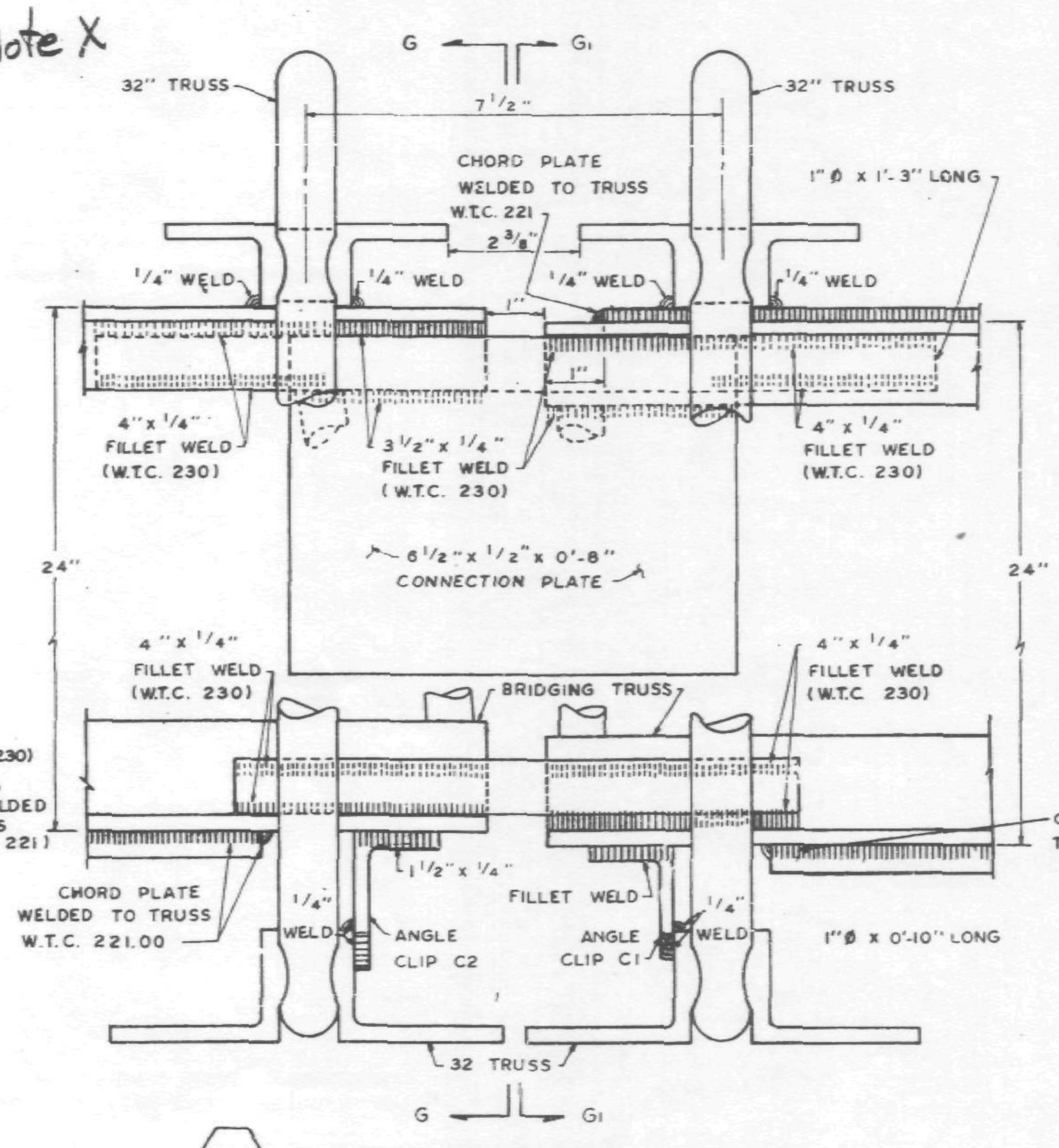

8-C CONNECTION DETAIL PANEL JOINT

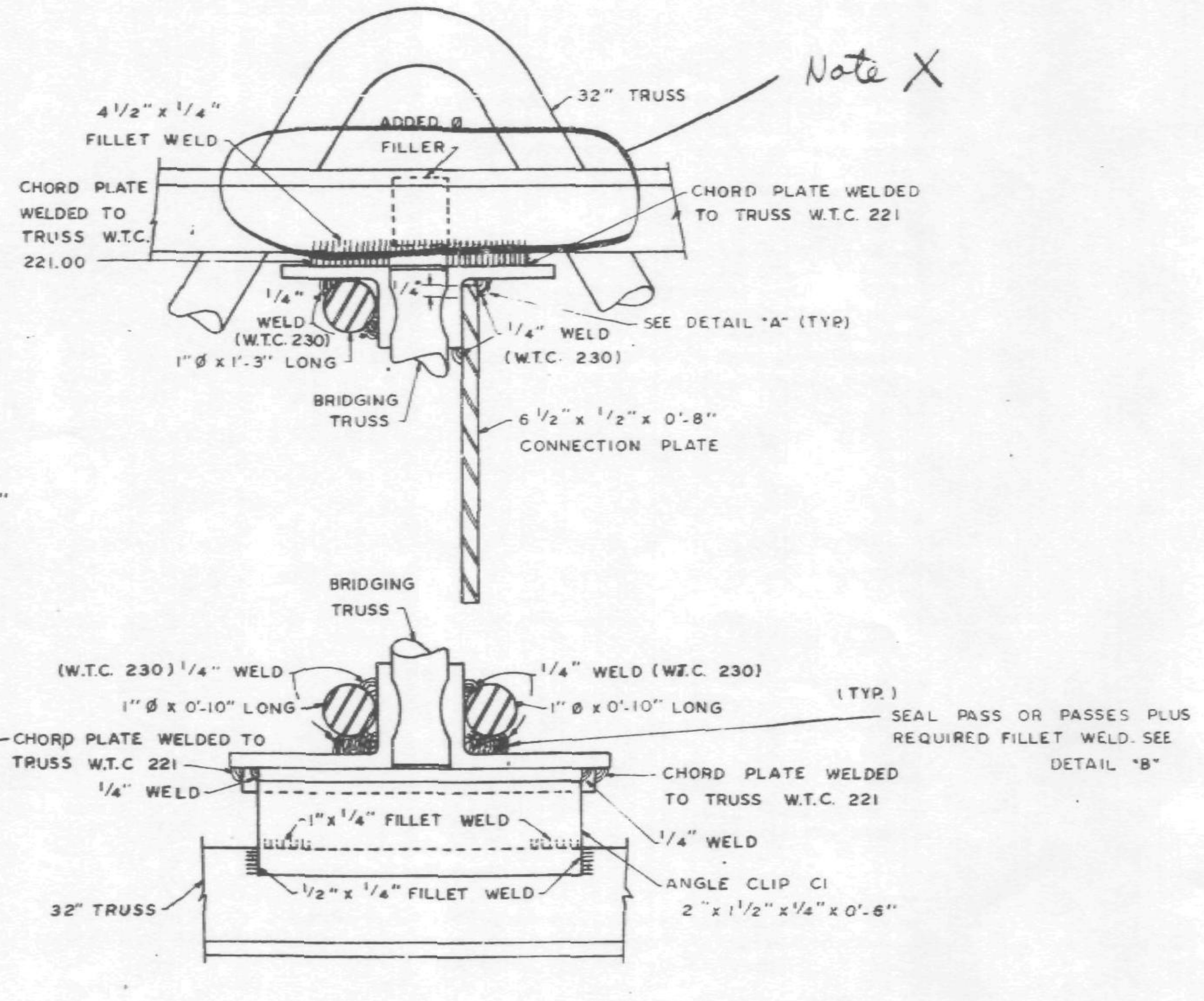

SECTION G1-G1

REF. DRWG. 7-AB4-18 5-17-68
7-AB4-18.1 5-17-68

6/3/68 WAB

NOTE.
1. UNLESS SHOWN OTHERWISE ALL CONNECTION ARC WELDS TO BE MADE BY W.T.C. 223.
2. ALL ARC WELDS TO BE MADE WITH LOW HYDROGEN RODS IN THE E-70 SERIES OR EQUAL.
3. ALL PLATE & Φ Splice Bars to be ASTM A36

NO.	DATE	REVISION	BY
1	5-20-68	WELD CORRECTIONS	L.W.H.

CONNECTION DETAILS FOR WORLD TRADE CENTER - N.Y.C. FOR THE PORT OF NEW YORK AUTHORITY

STANDARD CONNECTION DETAILS 8C, 10-C

FABRICATION BY: LACLEDE STEEL COMPANY
FABRICATED AT: MADISON, ILLINOIS
DESIGN DRAWING NO. PLATE
APPROVED FOR FABRICATION BY: FOR P.O.N.Y.A. DATE
DRAWN BY: DATE: MAY 14, 1968
APPROVED FOR FABRICATION BY FOR FABRICATOR DATE
CHECKED BY: T.M.CHURA DATE: MAY 15, 1968
IN CHARGE OF PROD. DEV.
LACLEDE STEEL CO. DETAILED BY A.C. WEBER
FABRICATION CONT. NO W.T.C. 221
SHEET NO. CD 202

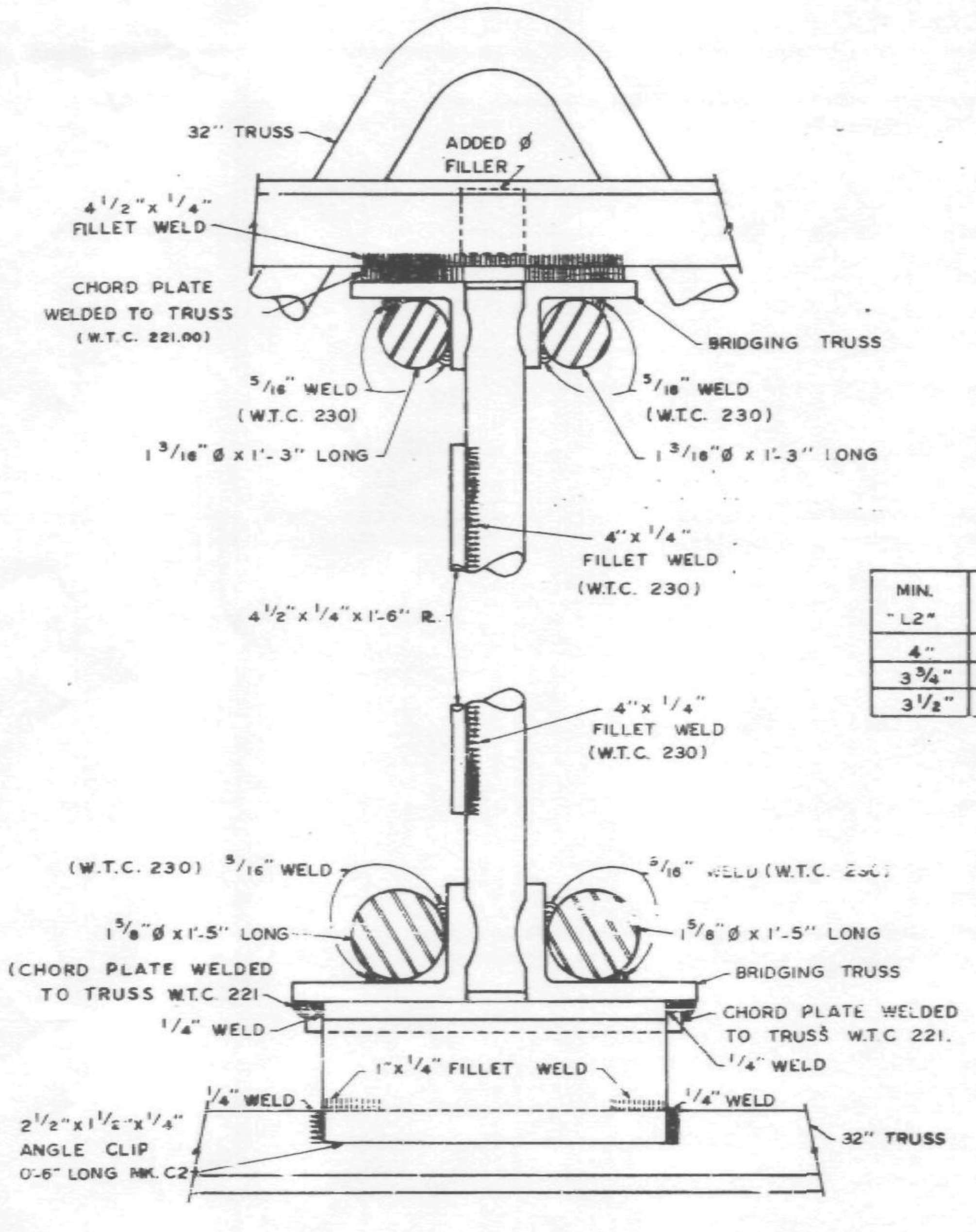

SECTION F-F

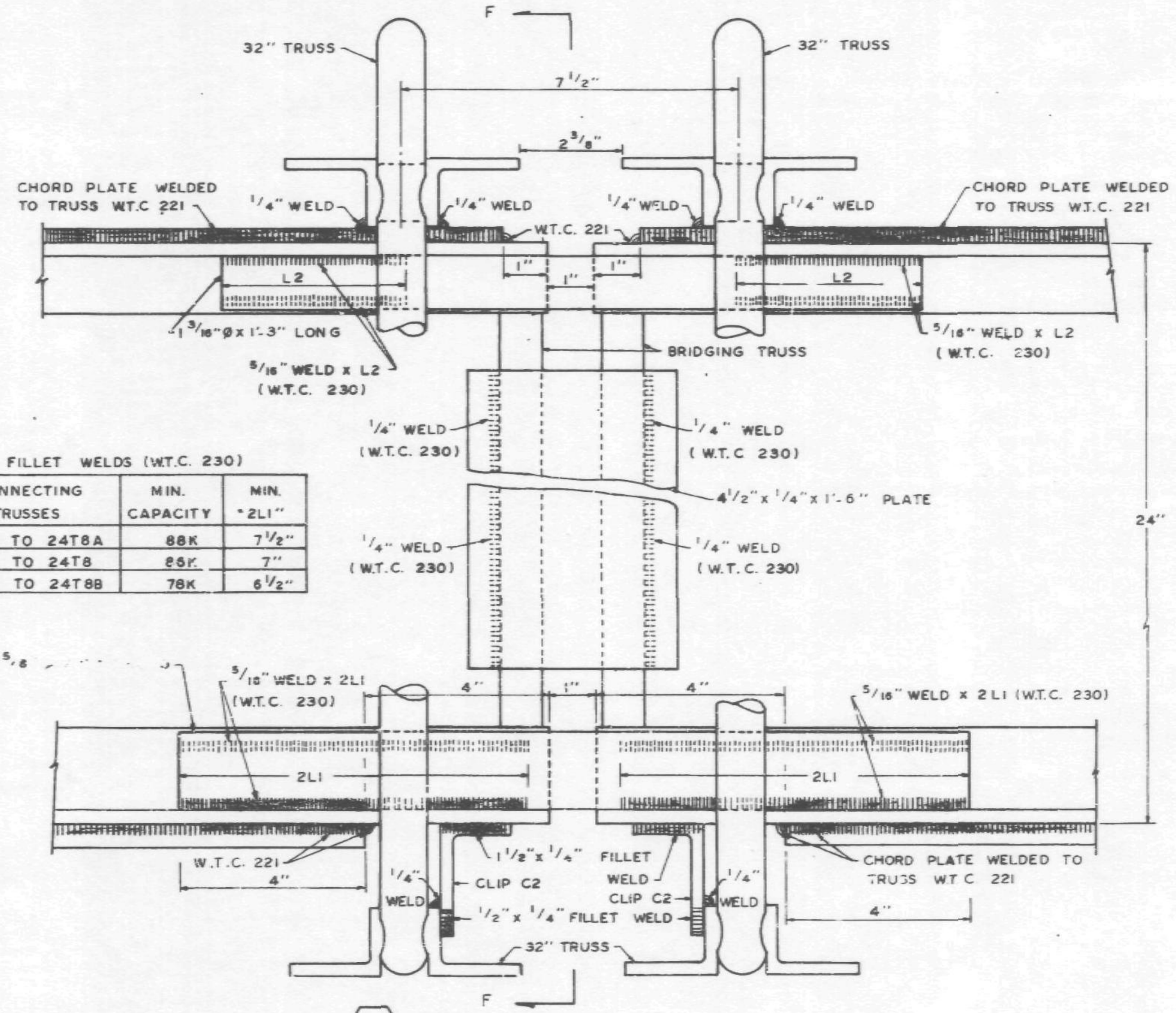

10-C CONNECTION DETAIL PANEL JOINT

5/16" FILLET WELDS (W.T.C. 230)

MIN. "L2"	CONNECTING TRUSSES	MIN. CAPACITY	MIN. "2L1"
4"	24T7A TO 24T8A	88K	7 1/2"
3 3/4"	24T7 TO 24T8	86K	7"
3 1/2"	24T7B TO 24T8B	78K	6 1/2"

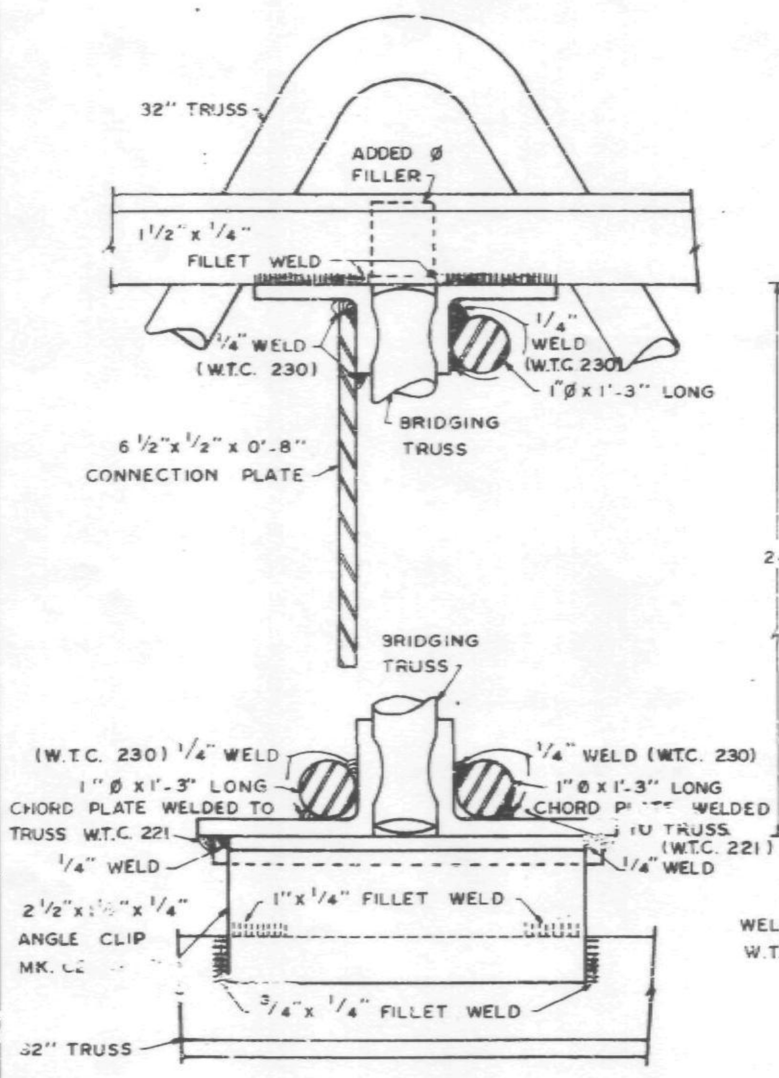

SECTION G-G

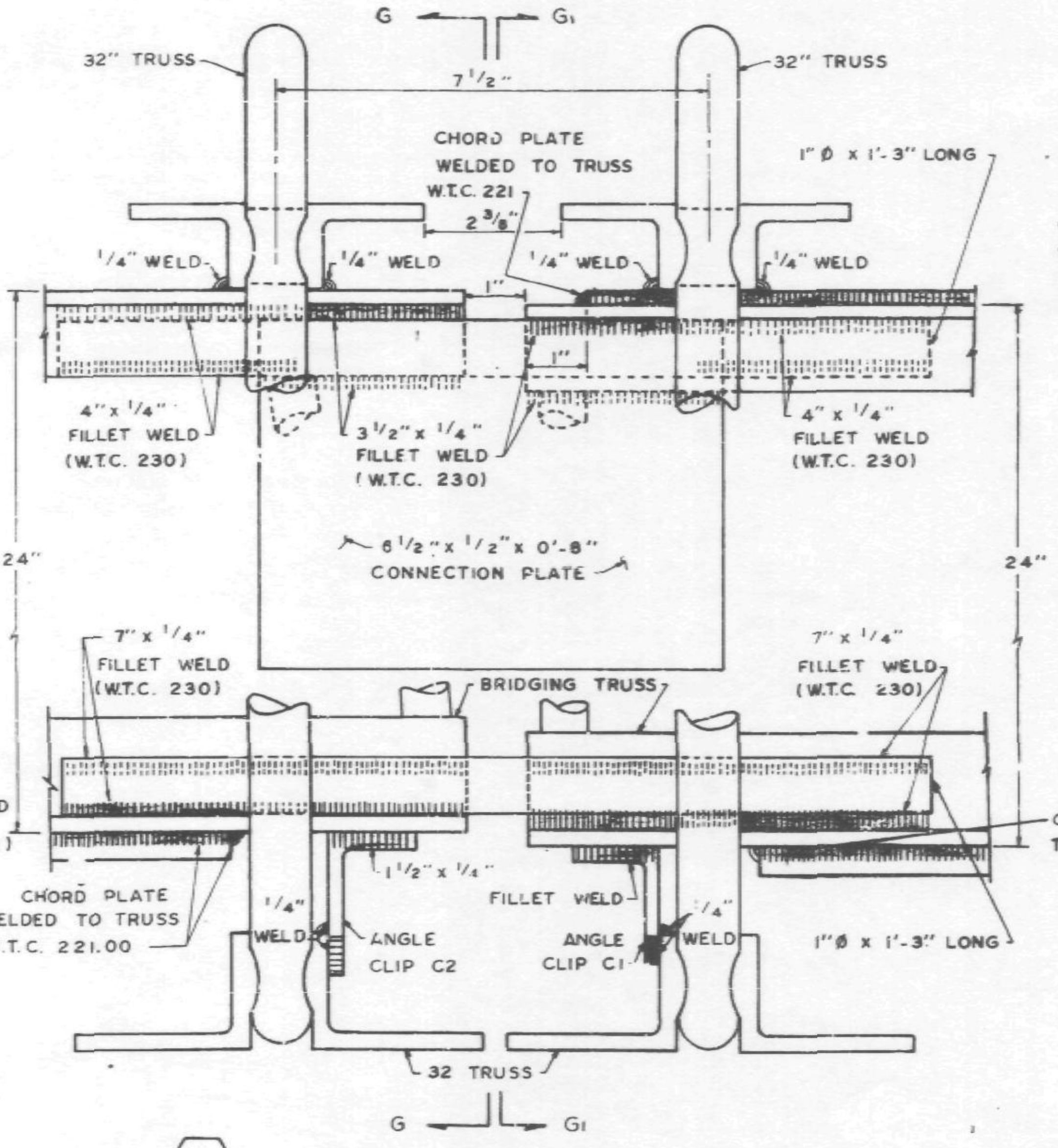

8-C CONNECTION DETAIL PANEL JOINT

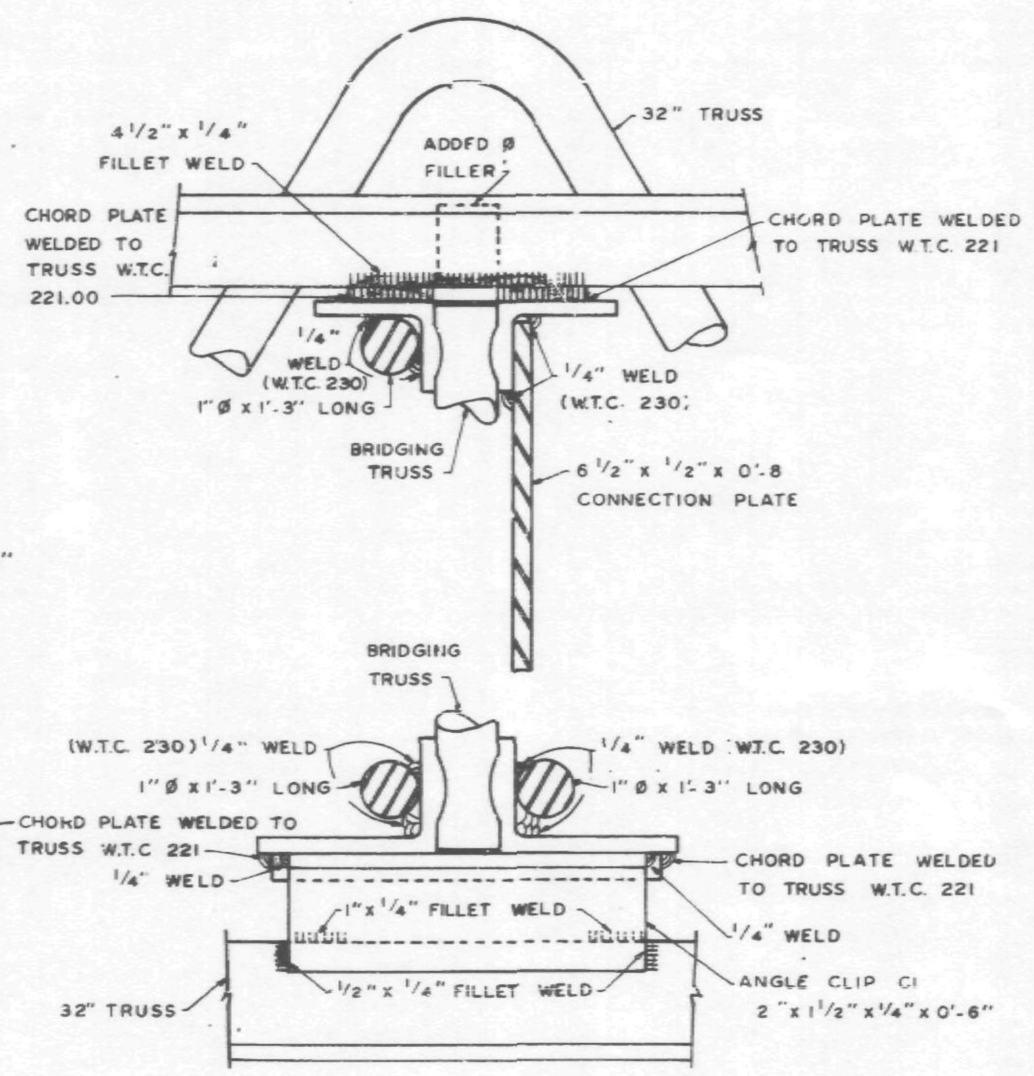

SECTION G1-G1

REF. DRWG. 7-AB4-18 5-6-68
7-AB4-18.1 5-6-68

NOTE.
1. UNLESS SHOWN OTHERWISE ALL CONNECTION ARC WELDS TO BE MADE BY W.T.C. 223.
2. ALL ARC WELDS TO BE MADE WITH LOW HYDROGEN RODS IN THE E-70 SERIES OR EQUAL.

CONNECTION DETAILS
FOR
WORLD TRADE CENTER - N.Y.C.
FOR
THE PORT OF NEW YORK AUTHORITY

STANDARD CONNECTION DETAILS 8C, 10-C

FABRICATION BY: LACLEDE STEEL COMPANY			
FABRICATED AT: MADISON, ILLINOIS		DESIGN DRAWING NO.	PLATE
APPROVED FOR FABRICATION BY: ______ FOR P.O.N.Y.A.	DATE.	DRAWN BY: [signature] DATE: MAY 14, 1968	
APPROVED FOR FABRICATION BY: ______ FOR FABRICATOR	DATE	CHECKED BY: T.M.CHURA DATE: MAY 15, 1968	IN CHARGE OF PROD. DEV.
DETAILED BY. A.C. WEBER		FABRICATION CONT. NO W.T.C. 221	SHEET NO. CD 202

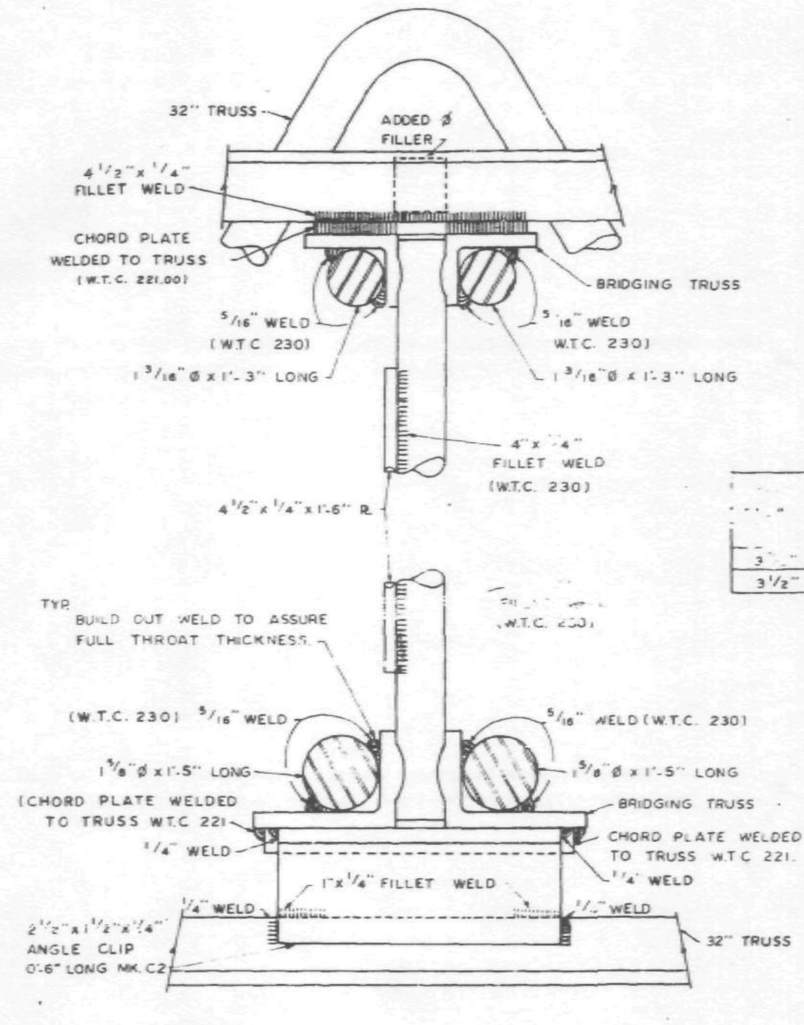

SECTION F-F

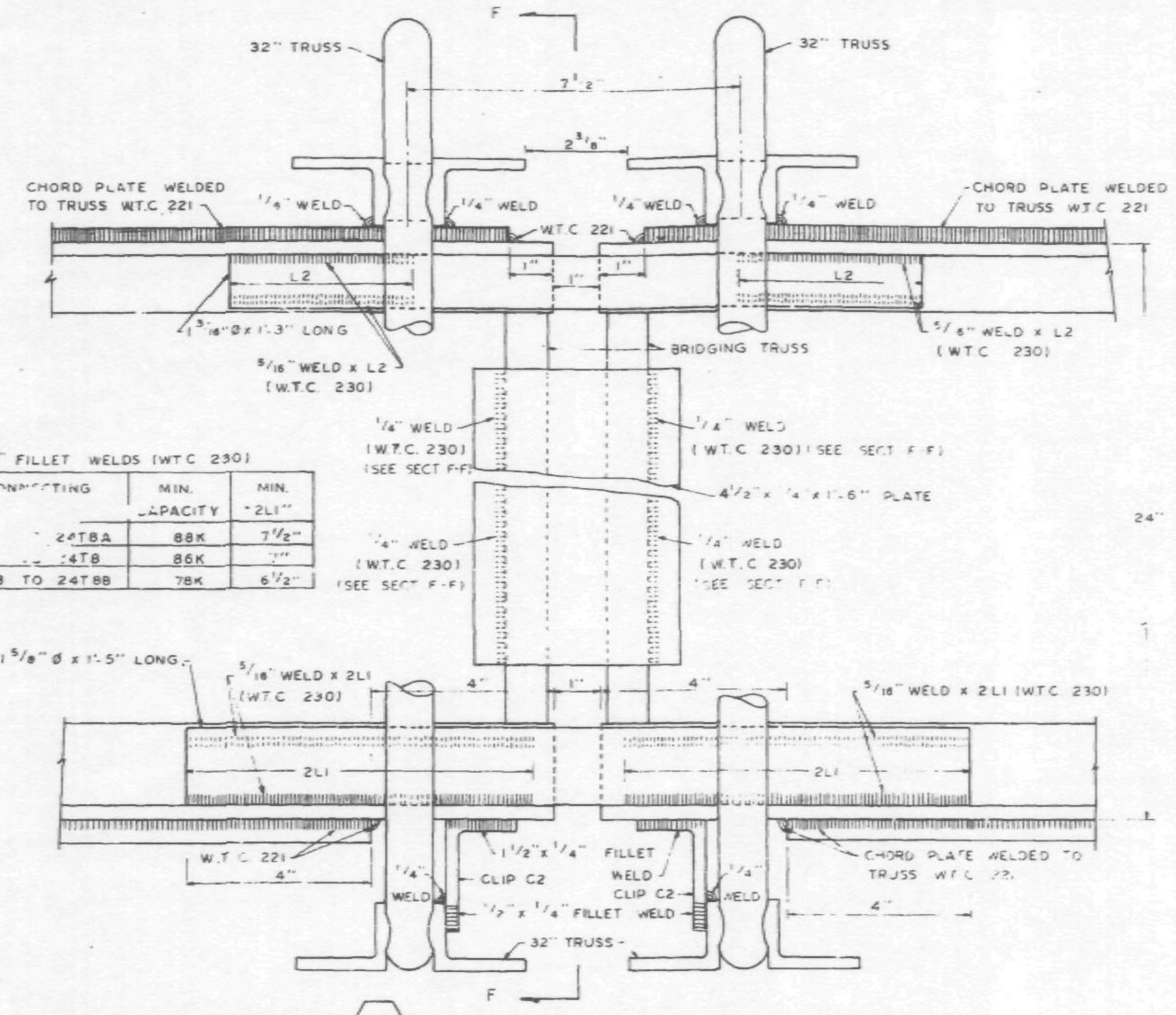

10-C CONNECTION DETAIL PANEL JOINT

$^5/_{16}$" FILLET WELDS (W.T.C. 230)

[illegible]	CONNECTING	MIN. CAPACITY	MIN. "2L1"
[illegible]	[illegible] 24T8A	88K	$7^1/_2$"
3[illegible]	[illegible] 24T8	86K	[illegible]
$3^1/_2$"	24T7B TO 24T8B	78K	$6^1/_2$"

DETAIL "B" DETAIL "A"

REF DRWG 7-AB4-18 5-17-68
7-AB4-18.1 5-17-68

NOTE.
1. UNLESS SHOWN OTHERWISE ALL CONNECTION ARC WELDS TO BE MADE BY W.T.C. 223.
2. ALL ARC WELDS TO BE MADE WITH LOW HYDROGEN RODS IN THE E-70 SERIES OR EQUAL.

No Action

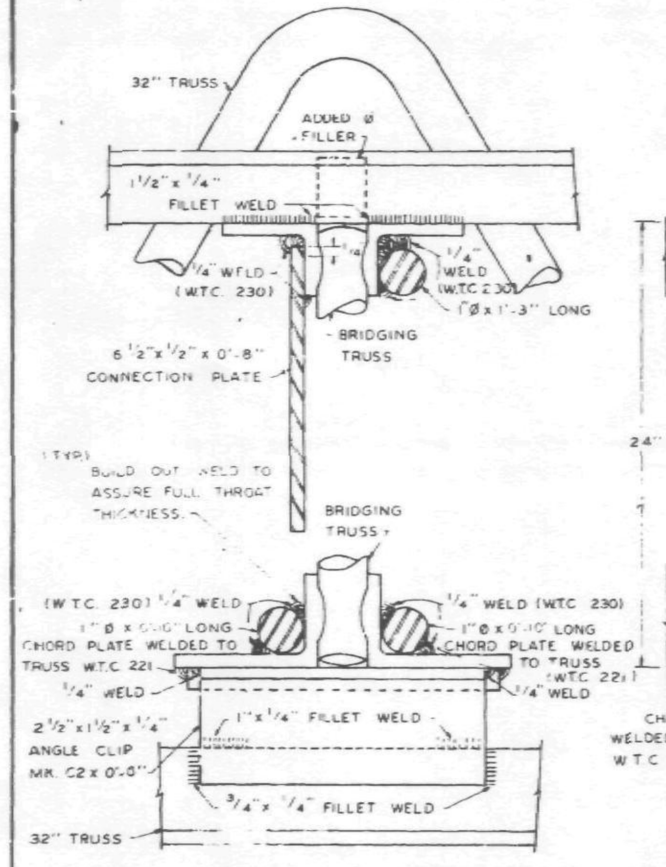

SECTION G-G

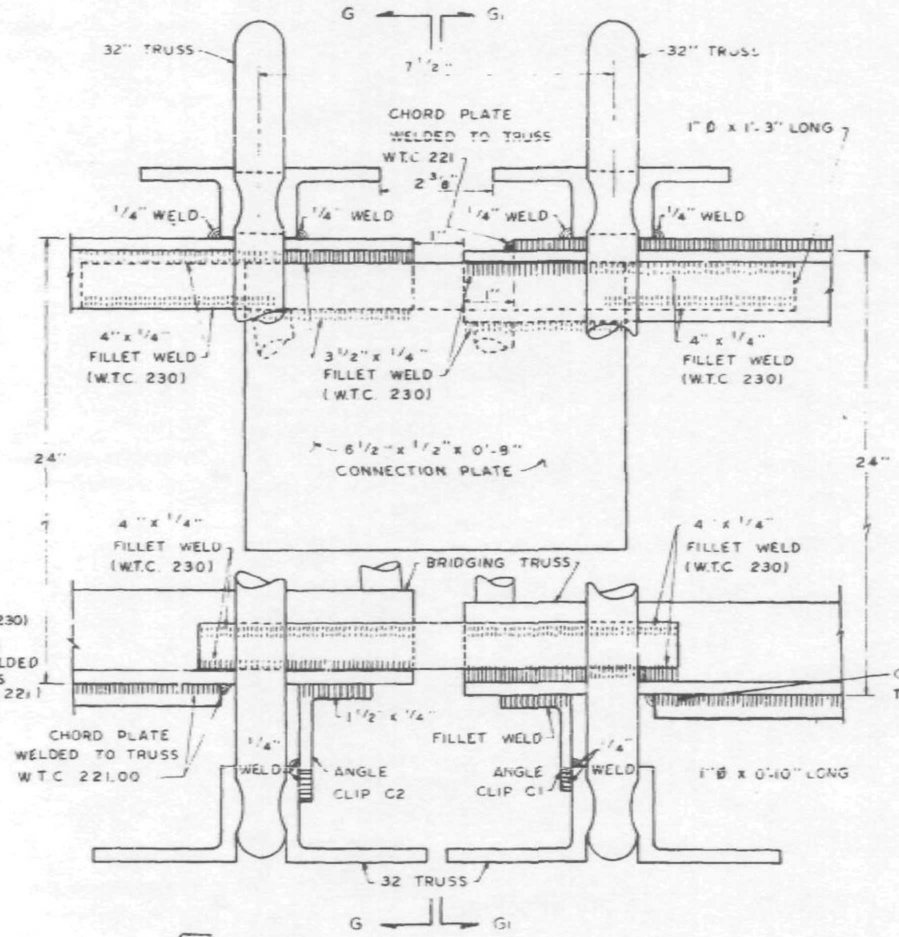

8-C CONNECTION DETAIL PANEL JOINT

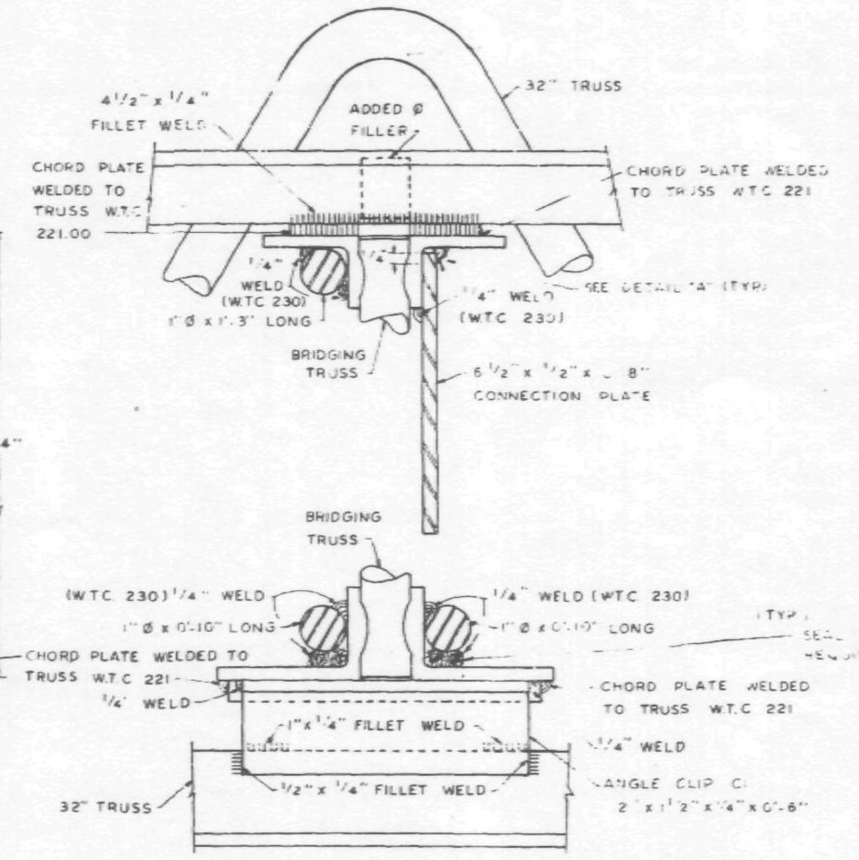

SECTION G1-G1

NO.	DATE	REVISION	BY
1	5-20-68	WELD CORRECTIONS	L.W.H.

CONNECTION DETAILS
FOR
WORLD TRADE CENTER - N.Y.C.
FOR
THE PORT OF NEW YORK AUTHORITY

STANDARD CONNECTION DETAILS 8C, 10-C

FABRICATION BY: LACLEDE STEEL COMPANY			
FABRICATED AT MADISON, ILLINOIS		DESIGN DRAWING NO.	PLATE
APPROVED FOR FABRICATION BY ______ FOR P.O.N.Y.A.	DATE	DRAWN BY [illegible] DATE: MAY 14, 1968	
APPROVED FOR FABRICATION BY ______ FOR FABRICATOR	DATE	CHECKED BY: T.M. CHURA DATE: MAY 15, 1968	IN CHARGE OF PROD. DEV.
DETAILED BY: A.C. WEBER		FABRICATION CONT. NO. W.T.C. 221	SHEET NO. CD 202

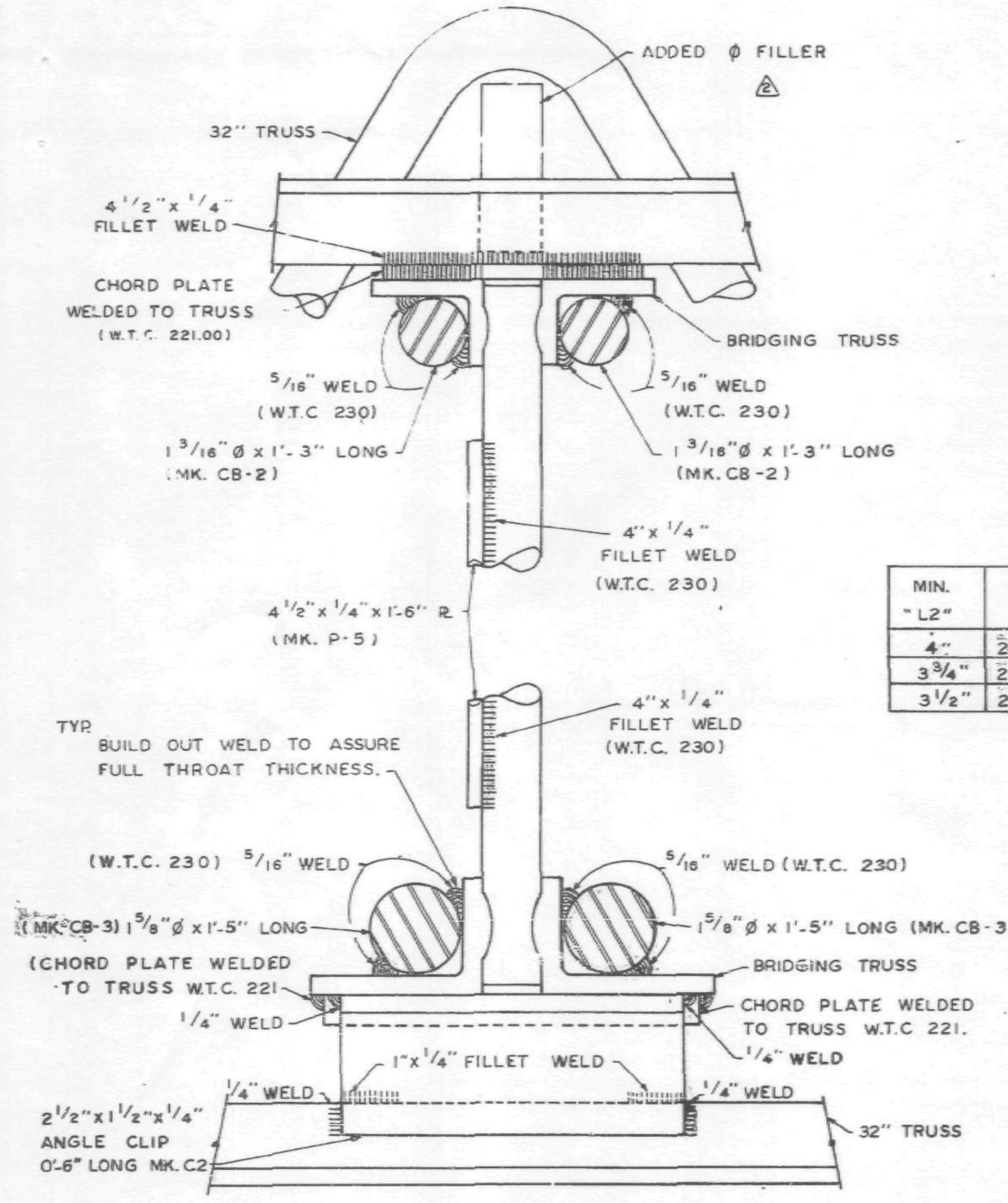

SECTION F - F

MIN. "L2"	CONNECTING TRUSSES	MIN. CAPACITY	MIN. "2L1"
4"	24T7A TO 24T8A	88K	7 1/2"
3 3/4"	24T7 TO 24T8	86K	7"
3 1/2"	24T7B TO 24T8B	78K	6 1/2"

5/16" FILLET WELDS (W.T.C. 230)

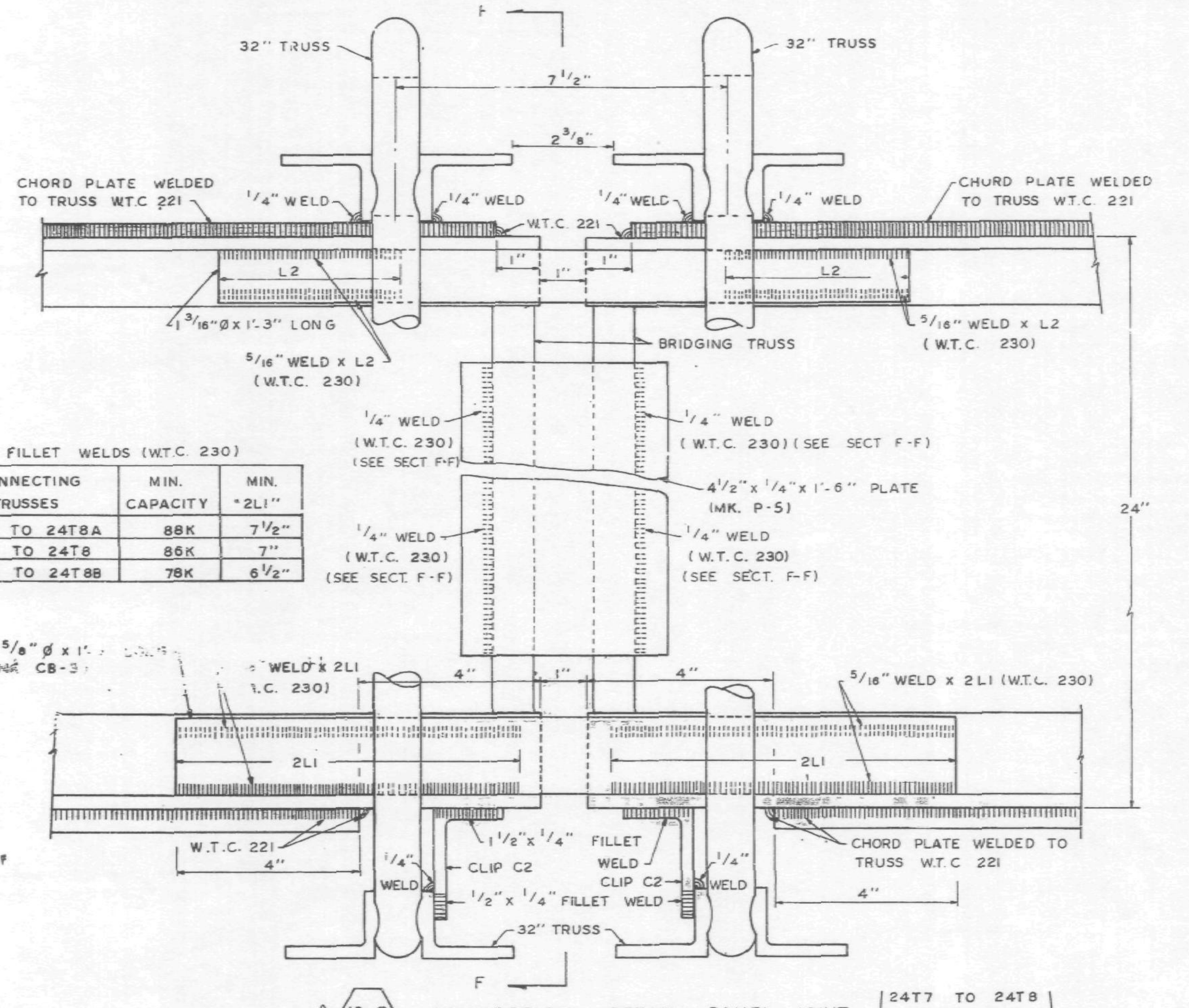

10-C CONNECTION DETAIL PANEL JOINT (24T7 TO 24T8, 24T7A TO 24T8A, 24T7B TO 24T8B)

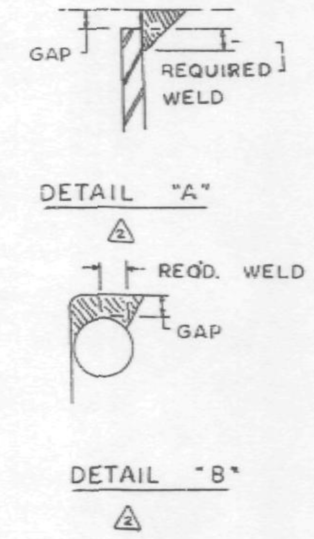

LIST OF FLOOR CONNECTION IDENTIFICATIONS

Connection Designation	Description	Drawing No.
1[illegible]	[illegible] x 2" x 1/4" Bridging Angles [illegible] 3[illegible] at Interior Panel Joints	CD 20[illegible]
[illegible]	[illegible] x 2" x 1/4" Bridging Angles [illegible] Trusses at Panel Joints (Except [illegible] 14C & 15C)	CD 201
[illegible]	Reserve[illegible]	
	Connection [illegible] Bridging Trusses with C32 Trusses at Interior Panel Joints (Panels A, [illegible]	CD 201
	[illegible] of [illegible] Bridging Trusses with C32 [illegible] Interior Panel Joints (Panels H, [illegible] and MR)	CD 201
5	[illegible] of 24T Bridging Trusses with C3[illegible] [illegible] Interior Panel Joints (Panels D, [illegible] and GR)	CD [illegible]
6[illegible]	Reserve[illegible]	
[illegible]	[illegible] of 24T Bridging Trusses with C32 Trusses at Panel Joints Except Special Cases 8C, 10C & 11C, 16C & 17C	CD 201
8C	Connections of the following Bridging Trusses at Panel Joints 24T8 to 24T10 24T8 to 24T10A [illegible] to 24T10B	CD 202
9C	Reserved	
10C	Connections of the following Bridging Trusses at Panel Joints 24T8 to 24T7 24T8A to 24T7A 24T8B to 24T7B	CD 202
11C	Connection of 24T12 or 24T13B Bridging Truss with the 24T10, 24T10A or 24T10B Bridging at Panel Joints	CD 204
12C	Reserved	
13C	Connection of 3" x 2" x 1/4" Bridging Angle at double C3[illegible]T6 Trusses with double C32T8 Trusses	CD 209
14C	Connection of 3" x 2" x 1/4" Bridging Angle at double C32T6 Trusses with double C32T10 Trusses	CD 207
15C	Connection of 3" x 2" x 1/4" Bridging Angle at double C32T6 Trusses with a C32T4 Truss	CD 205
16C	Connection of 24T9 Bridging Truss at double C32T6 Trusses with double C32T9 Trusses	CD 208
17C	Connection of 24T9A Bridging Truss at double C32T6 Trusses with double C32T11 Trusses	CD 206

REF. DRWG.

	7-AB4-18	5-6-68
2	7-AB4-18.1	5-6-68

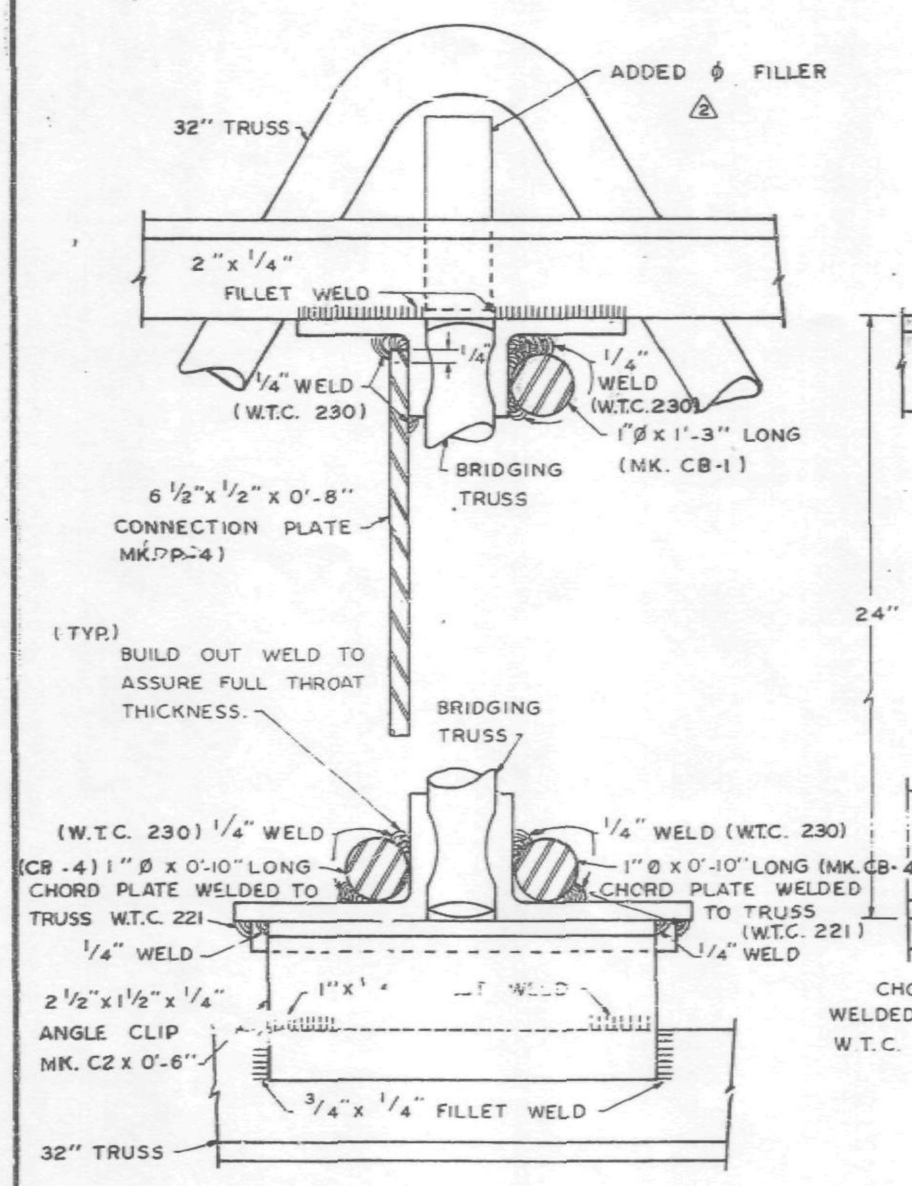

SECTION G - G

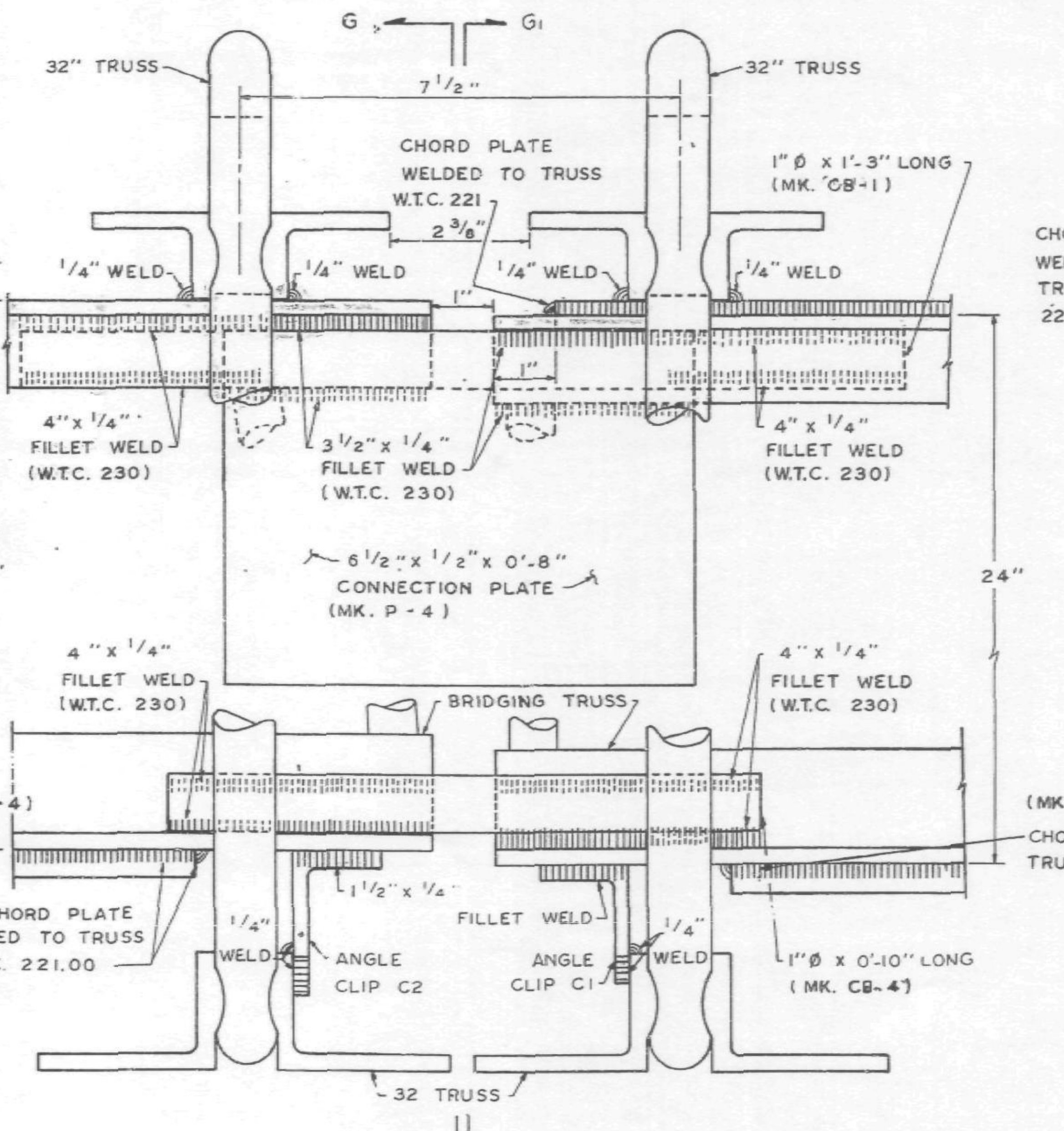

8-C CONNECTION DETAIL PANEL JOINT (24T8 TO 24T10, 24T8A TO 24T10A, 24T8B TO 24T10B)

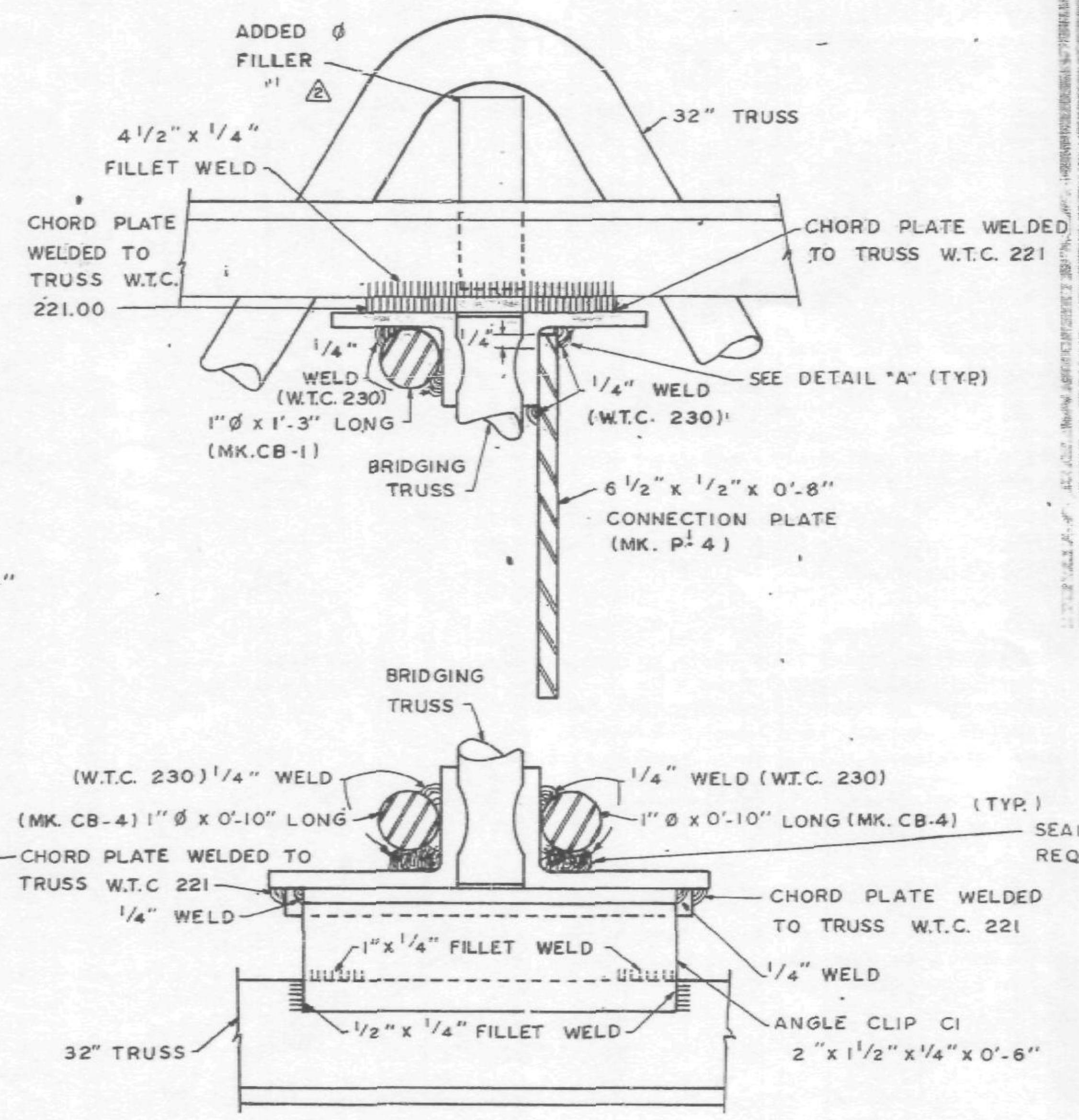

SECTION G1 - G1

NOTE.
1. UNLESS SHOWN OTHERWISE ALL CONNECTION ARC WELDS TO BE MADE BY W.T.C. 223.
2. ALL ARC WELDS TO BE MADE WITH LOW HYDROGEN RODS IN THE E-70 SERIES OR EQUAL.
2 3. ALL PLATES & ϕ SPLICE BARS TO BE ASTM A36

NO.	DATE	REVISION	BY
2	6-24-68	AS NOTED	L.W.H.
1	5-20-68	WELD CORRECTIONS	L.W.H.

CONNECTION DETAILS
FOR
WORLD TRADE CENTER - N.Y.C.
FOR
THE PORT OF NEW YORK AUTHORITY

STANDARD CONNECTION DETAILS 8C, 10-C

FABRICATION BY: LACLEDE STEEL COMPANY
FABRICATED AT: MADISON, ILLINOIS
APPROVED FOR FABRICATION BY: ______ FOR P.O.N.Y.A — DATE.
APPROVED FOR FABRICATION BY ______ FOR FABRICATOR — DATE
DETAILED BY: A.C. WEBER
DESIGN DRAWING NO. — PLATE
DRAWN BY: [illegible] DATE: MAY 14, 1968
CHECKED BY: T.M. CHURA DATE: MAY 15, 1968
IN CHARGE OF PROD. DEV.
FABRICATION CONT. NO. W.T.C. 221
SHEET NO. CD 202

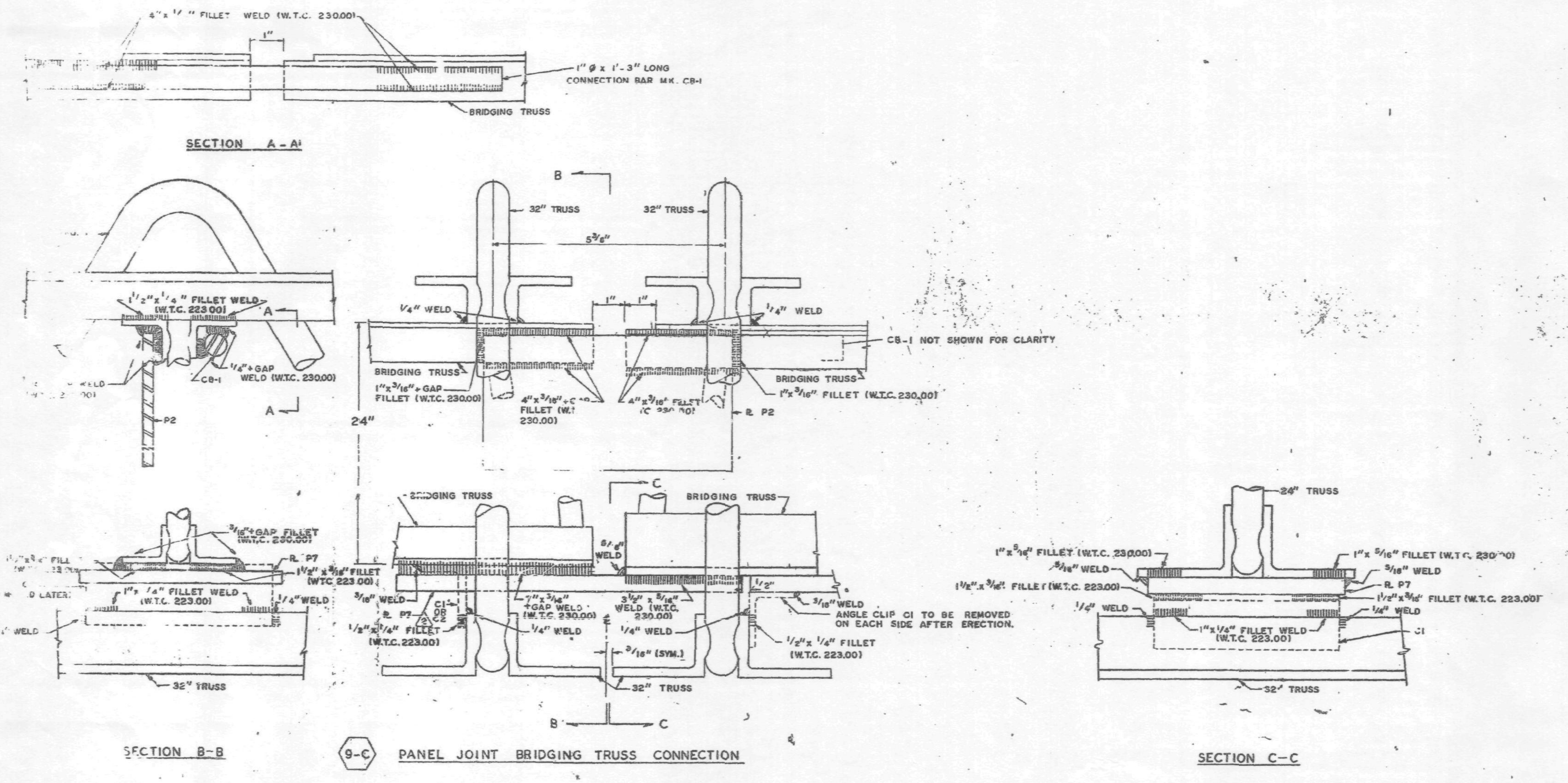

SECTION A-A

SECTION B-B

9-C PANEL JOINT BRIDGING TRUSS CONNECTION

SECTION C-C

FOR NOTES SEE SHEET CD 201.

CONNECTION DETAILS
FOR
WORLD TRADE CENTER · N.Y.C.
FOR
THE PORT OF NEW YORK AUTHORITY

CONNECTION DETAIL 9C

FABRICATION BY: LACLEDE STEEL COMPANY
FABRICATED AT MADISON, ILLINOIS
DESIGN DRAWING NO.
PLATE
APPROVED FOR FABRICATION FOR: P.O.N.Y.A. DATE 4/10/69
DRAWN BY: DATE: AUG. 14, 1965
APPROVED FOR FABRICATION FOR FABRICATOR
CHECKED DATE: AUG. 14, 1965
LACLEDE STEEL CO.
DETAILED BY A.C. WEBER
SHEET CD 03

NO.	DATE	REVISION	BY
2	1-8-68	AS NOTED	G.D.C.
1	9-3-68	GENERAL	G.D.C.

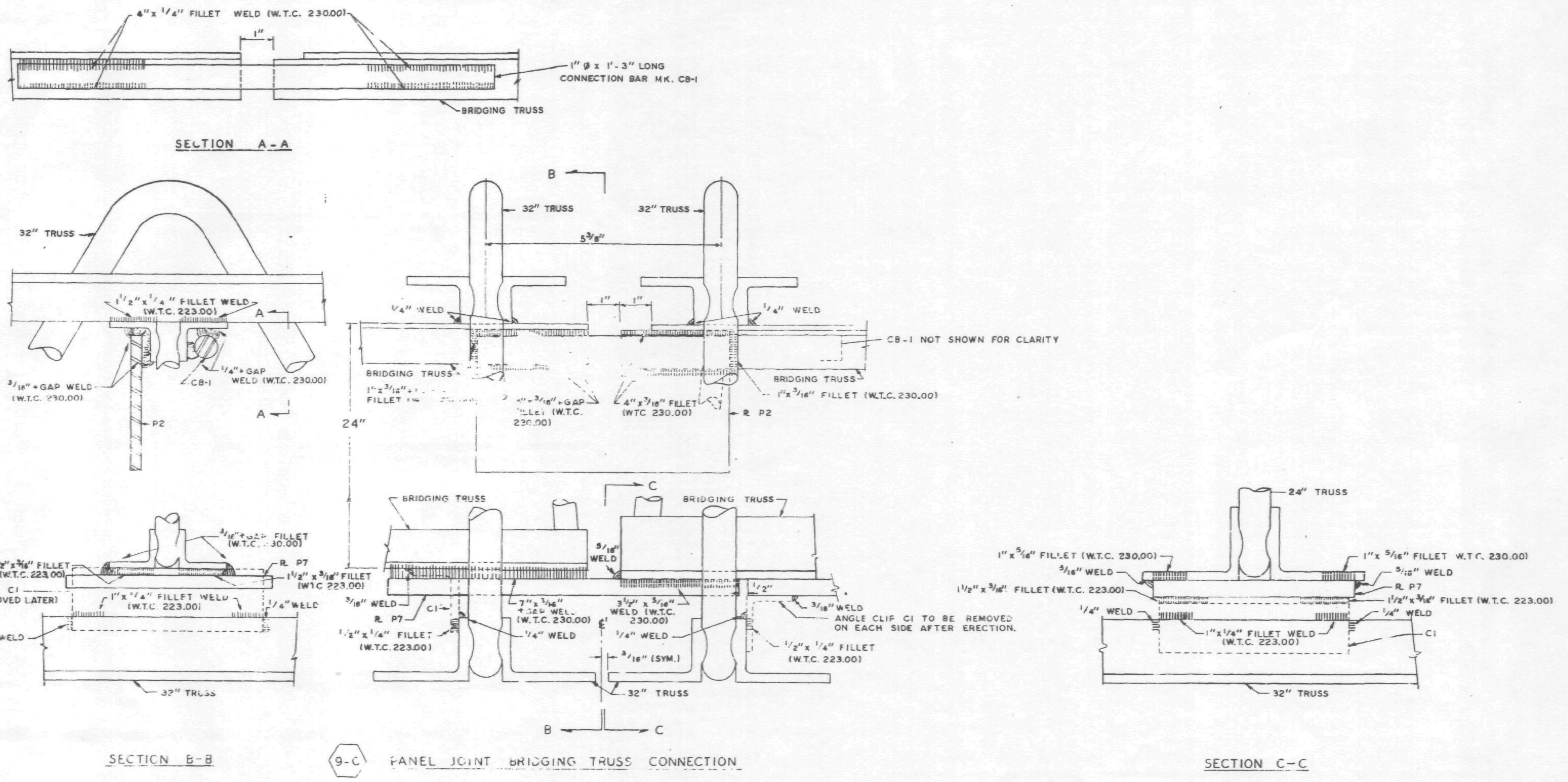

FOR NOTES SEE SHEET CD 201.

CONNECTION DETAILS
FOR
WORLD TRADE CENTER - N.Y.C.
FOR
THE PORT OF NEW YORK AUTHORITY

CONNECTION DETAIL 9C

FABRICATION BY LACLEDE STEEL COMPANY			
FABRICATED AT MADISON, ILLINOIS		DESIGN DRAWING NO.	PLATE
APPROVED FOR FABRICATION FOR PONYA	DATE 9/19/68	DRAWN BY gdc DATE AUG. 14, 1968	
APPROVED FOR FABRICATION BY FOR FABRICATOR	DATE	CHECKED BY T.M.CHURA DATE AUG. 14, 1968	IN CHARGE OF PROD. DEV.
DETAILED BY A.C. WEBER		FABRICATION CONT. NO. W.T.C. 221	SHEET NO. CD 203

NO.	DATE	REVISION	BY
1	9-3-68	GENERAL	G.D.C.

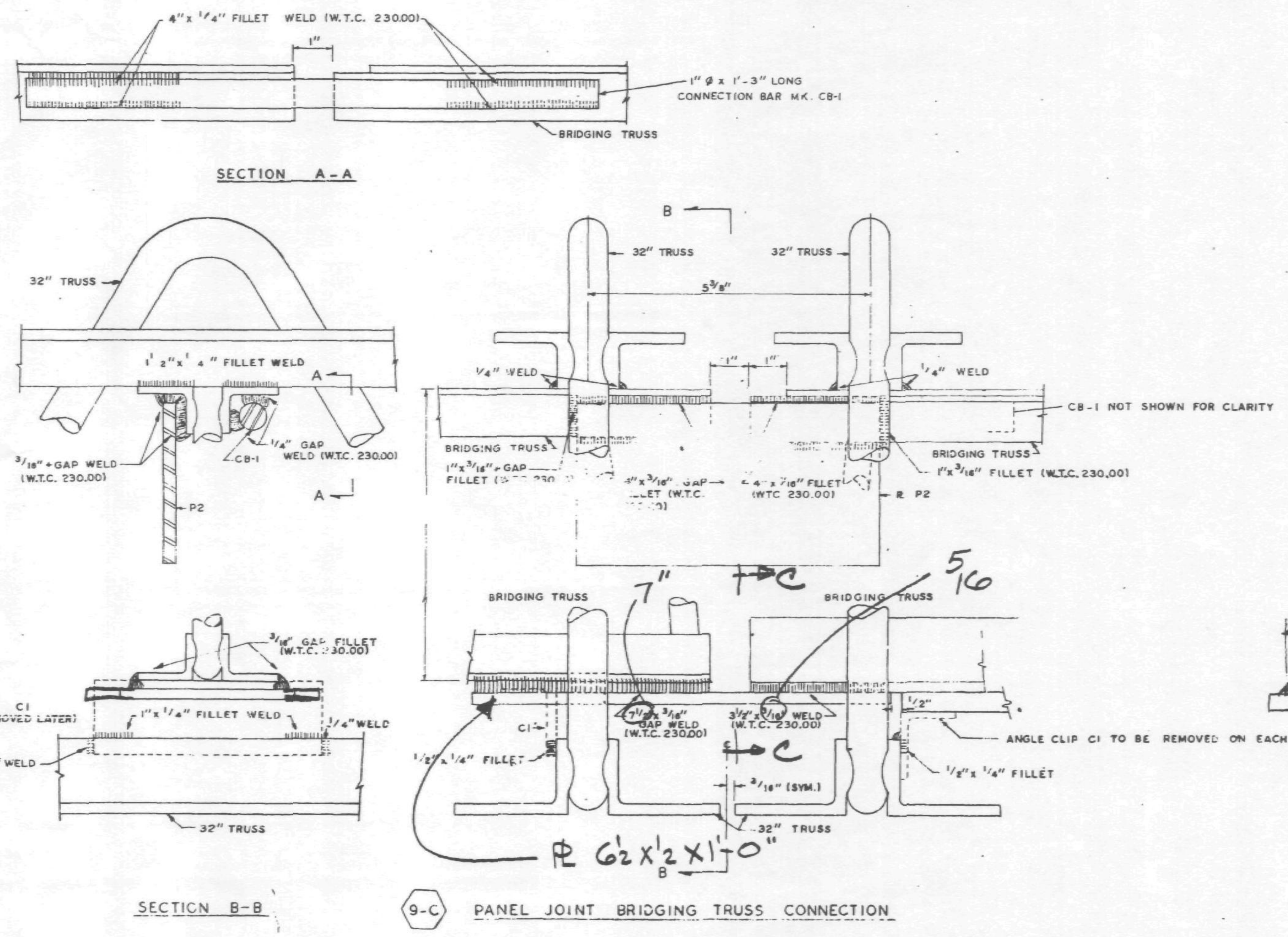

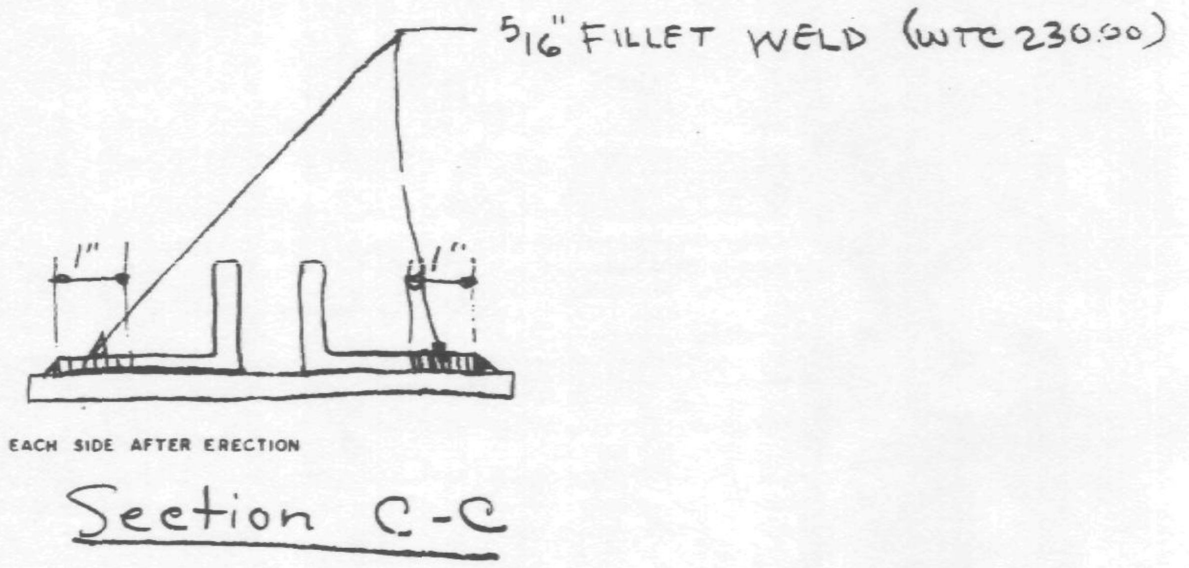

FOR NOTES SEE SHEET CD 201.

9/29/68 SK

CONNECTION DETAILS
FOR
WORLD TRADE CENTER N.Y.C.
FOR
THE PORT OF NEW YORK AUTHORITY

CONNECTION DETAIL 9C

FABRICATION BY LACLEDE STEEL COMPANY			
FABRICATED AT MADISON, ILLINOIS		DESIGN DRAWING NO.	PLATE
APPROVED FOR FABRICATION BY FOR P.O.N.Y.A.	DATE	DRAWN BY DATE AUG. 14, 1968	
APPROVED FOR FABRICATION BY FOR FABRICATOR	DATE	CHECKED BY T. MCHURA DATE AUG. 14, 1968	IN CHARGE OF PROD. DEV.
DETAILED BY A.C. WEBER		FABRICATION CONT. NO. WTC 221	SHEET NO. CD 203

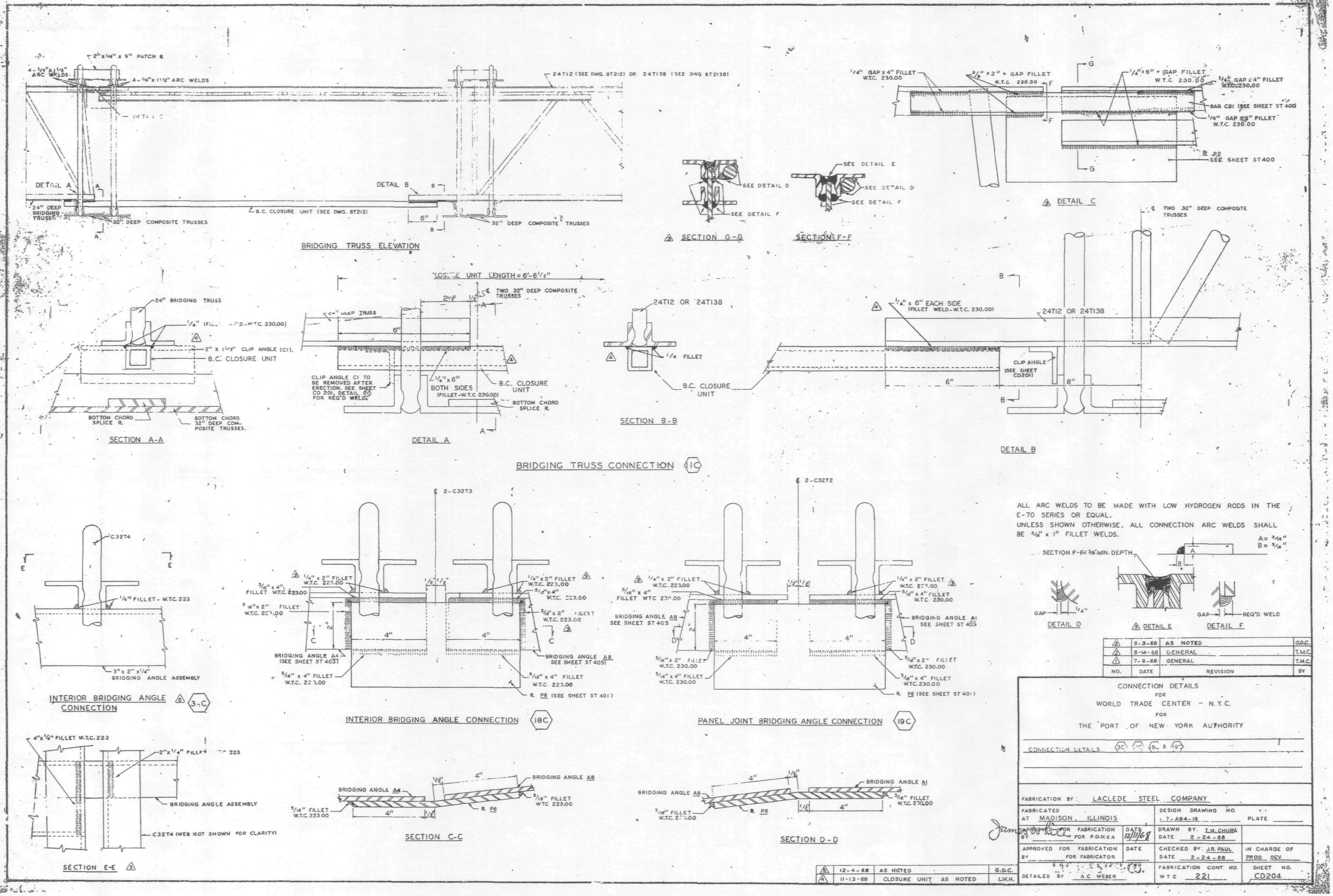

BRIDGING TRUSS ELEVATION
24T12 (SEE DWG. 8T212) OR 24T138 (SEE DWG 8T2138)
2"x1/4"x 9" PATCH ℞
4-1/4"x1 1/2" ARC WELDS
DETAIL A
DETAIL B
DETAIL C
24" DEEP BRIDGING TRUSS
32" DEEP COMPOSITE TRUSSES
B.C. CLOSURE UNIT (SEE DWG. 8T212)
SECTION G-G
SECTION F-F
SEE DETAIL D
SEE DETAIL E
SEE DETAIL F
1/4" GAP x 4" FILLET W.T.C. 230.00
3/8" x 2" + GAP FILLET W.T.C. 230.00
1/4" x 6" + GAP FILLET W.T.C. 230.00
3/16" GAP x 4" FILLET W.T.C. 230.00
BAR CB1 (SEE SHEET ST 400)
1/4" GAP x 2" FILLET W.T.C. 230.00
℞ P2 SEE SHEET ST400
TWO 32" DEEP COMPOSITE TRUSSES
24" BRIDGING TRUSS
2" x 1 1/2" CLIP ANGLE (C1)
B.C. CLOSURE UNIT
BOTTOM CHORD SPLICE ℞
BOTTOM CHORD 32" DEEP COMPOSITE TRUSSES
SECTION A-A
CLOSURE UNIT LENGTH = 6'-6 1/2"
CLIP ANGLE C1 TO BE REMOVED AFTER ERECTION. SEE SHEET CD 201, DETAIL 10 FOR REQ'D WELD.
1/4" x 6" BOTH SIDES (FILLET-W.T.C. 230.00)
24T12 OR 24T138
1/4 FILLET
SECTION B-B
1/4" x 6" EACH SIDE (FILLET WELD-W.T.C. 230.00)
CLIP ANGLE (SEE SHEET CD201)
BRIDGING TRUSS CONNECTION 11C
ALL ARC WELDS TO BE MADE WITH LOW HYDROGEN RODS IN THE E-70 SERIES OR EQUAL.
UNLESS SHOWN OTHERWISE, ALL CONNECTION ARC WELDS SHALL BE 3/16 x 1" FILLET WELDS.
A = 3/16"
B = 3/16"
SECTION F-F 3/8" MIN. DEPTH
DETAIL D
DETAIL E
DETAIL F
REQ'D WELD
C32T4
1/4" FILLET - W.T.C. 223
3" x 2" x 1/4" BRIDGING ANGLE ASSEMBLY
INTERIOR BRIDGING ANGLE CONNECTION 3-C
℄ 2-C32T3
BRIDGING ANGLE A4 (SEE SHEET ST 403)
BRIDGING ANGLE A8 SEE SHEET ST 405
5/16" x 4" FILLET W.T.C. 223.00
℞ P6 (SEE SHEET ST 401)
INTERIOR BRIDGING ANGLE CONNECTION 18C
℄ 2-C32T2
BRIDGING ANGLE A1 SEE SHEET ST 403
5/16" x 4" FILLET W.T.C. 230.00
PANEL JOINT BRIDGING ANGLE CONNECTION 19C
4"x1/4" FILLET W.T.C. 223
BRIDGING ANGLE ASSEMBLY
C32T4 (WEB NOT SHOWN FOR CLARITY)
SECTION E-E
SECTION C-C
SECTION D-D
5 | 9-3-68 | AS NOTED | G.D.C.
2 | 8-14-68 | GENERAL | T.M.C.
1 | 7-9-68 | GENERAL | T.M.C.
NO. | DATE | REVISION | BY
5 | 12-4-68 | AS NOTED | G.D.C.
4 | 11-13-68 | CLOSURE UNIT AS NOTED | L.W.H.
CONNECTION DETAILS FOR WORLD TRADE CENTER - N.Y.C. FOR THE PORT OF NEW YORK AUTHORITY
CONNECTION DETAILS 3C, 11C, 18C & 19C
FABRICATION BY: LACLEDE STEEL COMPANY
FABRICATED AT MADISON, ILLINOIS
DESIGN DRAWING NO. 7-A84-19
APPROVED FOR FABRICATION FOR P.O.N.Y.A. DATE 12/11/68
DRAWN BY T.M. CHURA DATE 2-24-68
CHECKED BY J.R. PAUL DATE 2-24-68
IN CHARGE OF PROD. DEV.
DETAILED BY A.C. WEBER
FABRICATION CONT. NO. WTC 221
SHEET NO. CD204

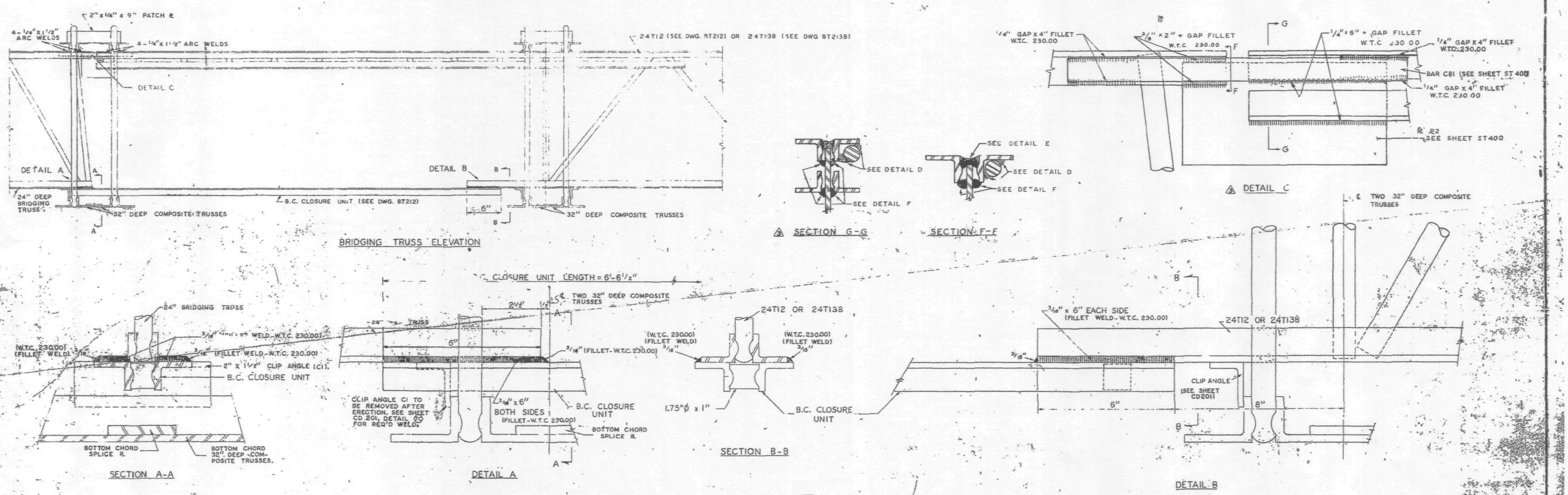

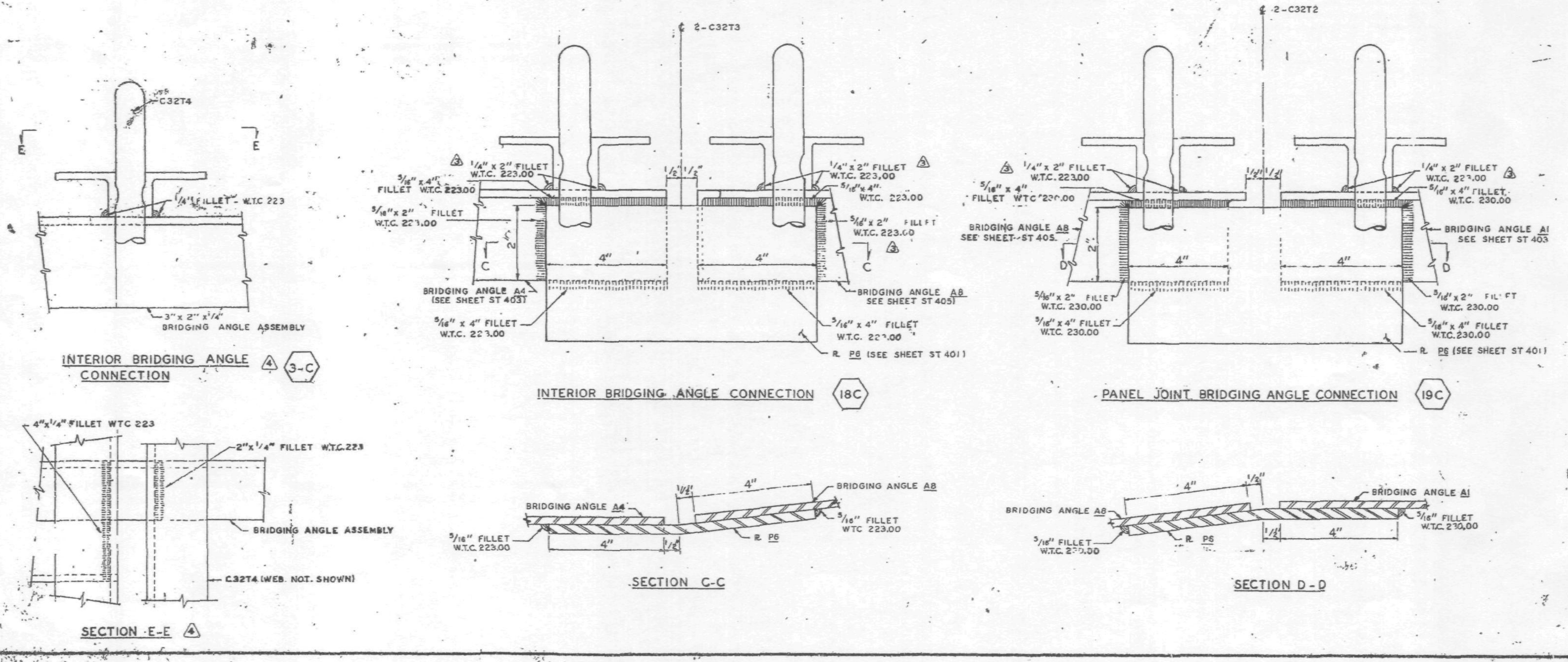

ALL ARC WELDS TO BE MADE WITH LOW HYDROGEN RODS IN THE E-70 SERIES OR EQUAL.
UNLESS SHOWN OTHERWISE. ALL CONNECTION ARC WELDS SHALL BE 3/16" x 1" FILLET WELDS.

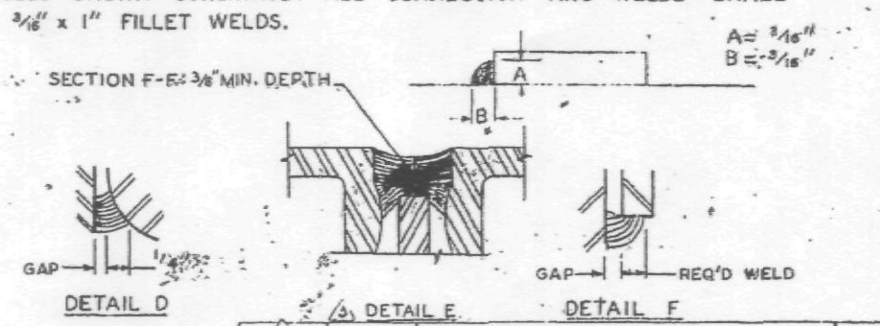

NO.	DATE	REVISION	BY
4	12-3-68	AS NOTED	G.D.C.
3	9-3-68	AS NOTED	G.D.C.
2	8-14-68	GENERAL	T.M.C.
1	7-9-68	GENERAL	T.M.C.

CONNECTION DETAILS
FOR
WORLD TRADE CENTER - N.Y.C
FOR
THE PORT OF NEW YORK AUTHORITY

CONNECTION DETAILS 3C 11C 18C & 19C

FABRICATION BY: LACLEDE STEEL COMPANY

FABRICATED AT. MADISON, ILLINOIS		DESIGN DRAWING NO. 7-A84-19	PLATE
APPROVED FOR FABRICATION BY James White FOR P.O.N.Y.A.	DATE 12/9/68	DRAWN BY: T.M. CHURA DATE 2-24-68	
APPROVED FOR FABRICATION BY FOR FABRICATOR	DATE	CHECKED BY. J.R. PAUL DATE 2-24-68	IN CHARGE OF PROD. DEV.
DETAILED BY A.C. WEBER		FABRICATION CONT. NO W.T.C 221	SHEET NO. CD204

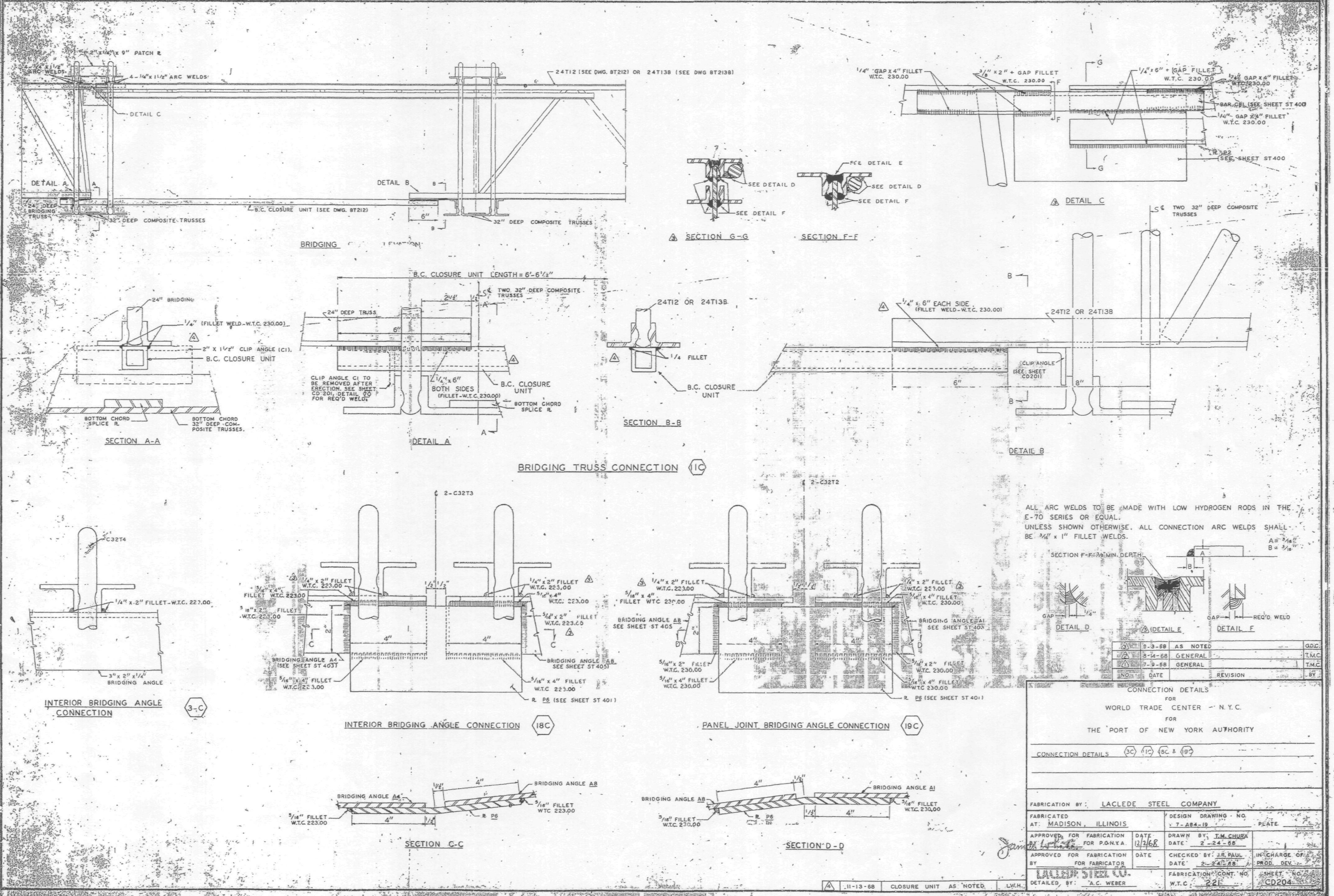

ALL ARC WELDS TO BE MADE WITH LOW HYDROGEN RODS IN THE E-70 SERIES OR EQUAL.
UNLESS SHOWN OTHERWISE, ALL CONNECTION ARC WELDS SHALL BE 3/16" x 1" FILLET WELDS.

NO.	DATE	REVISION	BY
3	9-3-68	AS NOTED	G.D.C.
2	8-14-68	GENERAL	T.M.C.
1	7-9-68	GENERAL	T.M.C.

CONNECTION DETAILS
FOR
WORLD TRADE CENTER – N.Y.C.
FOR
THE PORT OF NEW YORK AUTHORITY

CONNECTION DETAILS 3C 1C 18C & 19C

FABRICATION BY: LACLEDE STEEL COMPANY
FABRICATED AT: MADISON, ILLINOIS
DESIGN DRAWING - NO. 7-A84-19
PLATE
APPROVED FOR FABRICATION BY FOR P.O.N.Y.A. DATE 12/2/68
DRAWN BY: T.M. CHURA DATE 2-24-68
APPROVED FOR FABRICATION BY FOR FABRICATOR DATE
CHECKED BY: J.R. PAUL DATE 2-24-68
IN CHARGE OF PROD. DEV.
LACLEDE STEEL CO.
DETAILED BY: A.C. WEBER
FABRICATION CONT. NO. W.T.C. 221
SHEET NO. CD204

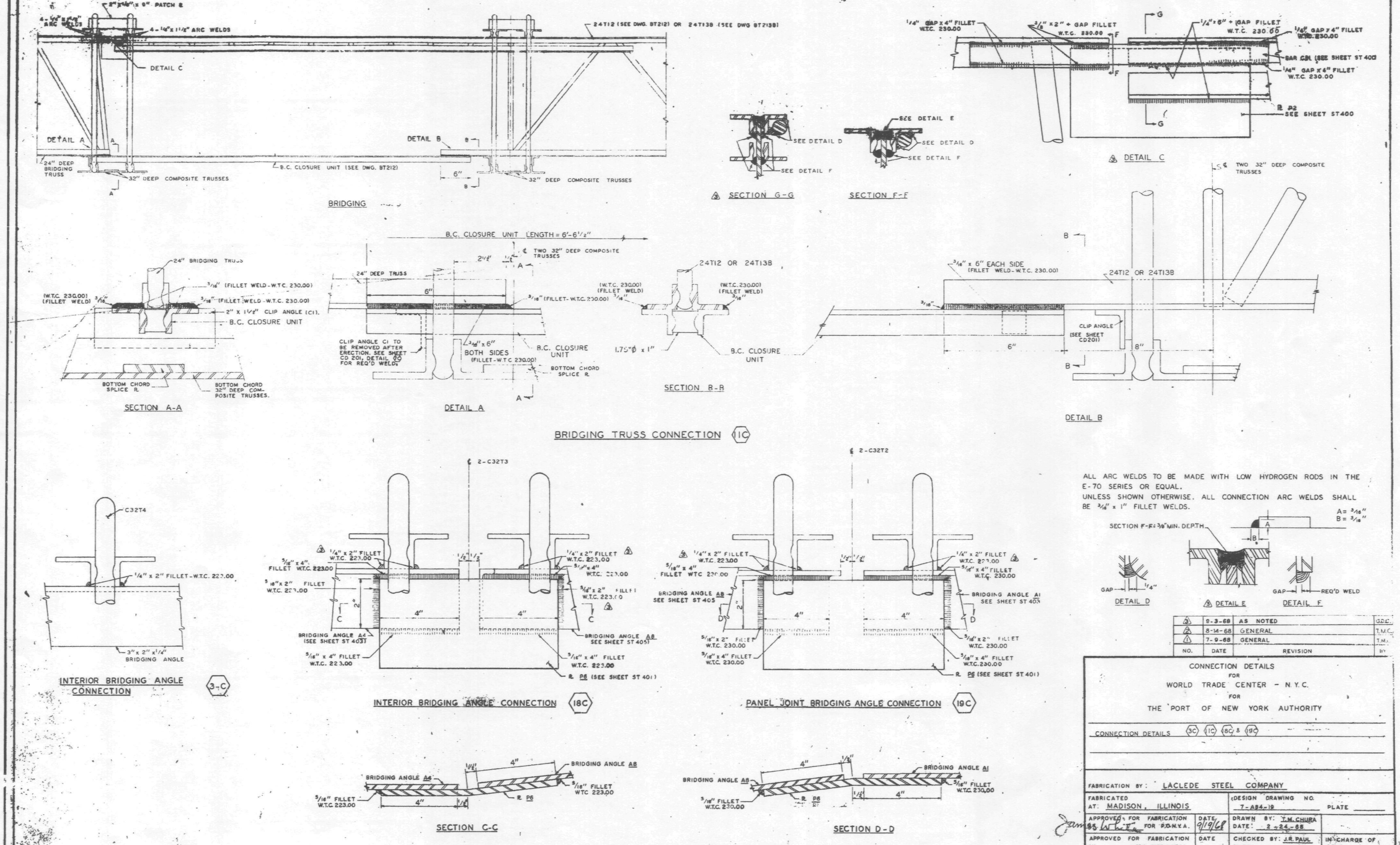

ALL ARC WELDS TO BE MADE WITH LOW HYDROGEN RODS IN THE E-70 SERIES OR EQUAL.
UNLESS SHOWN OTHERWISE, ALL CONNECTION ARC WELDS SHALL BE 1/4" x 1" FILLET WELDS.

A = 3/16"
B = 3/16"

NO.	DATE	REVISION	BY
3	9-3-68	AS NOTED	G.D.E.
2	8-14-68	GENERAL	T.M.C.
1	7-9-68	GENERAL	T.M.

CONNECTION DETAILS
FOR
WORLD TRADE CENTER - N.Y.C.
FOR
THE PORT OF NEW YORK AUTHORITY

CONNECTION DETAILS (3C) (1C) (18C) & (19C)

FABRICATION BY: LACLEDE STEEL COMPANY

FABRICATED AT: MADISON, ILLINOIS	DESIGN DRAWING NO. 7-A84-19	PLATE
APPROVED FOR FABRICATION FOR P.O.N.Y.A. James White DATE 9/19/68	DRAWN BY: T.M. CHURA DATE: 2-24-68	
APPROVED FOR FABRICATION BY FOR FABRICATOR DATE	CHECKED BY: J.R. PAUL DATE: 2-24-68	IN CHARGE OF PROD. DEV.
DETAILED BY: A.C. WEBER	FABRICATION CONT. NO. W.T.C. 221	SHEET NO. CD204

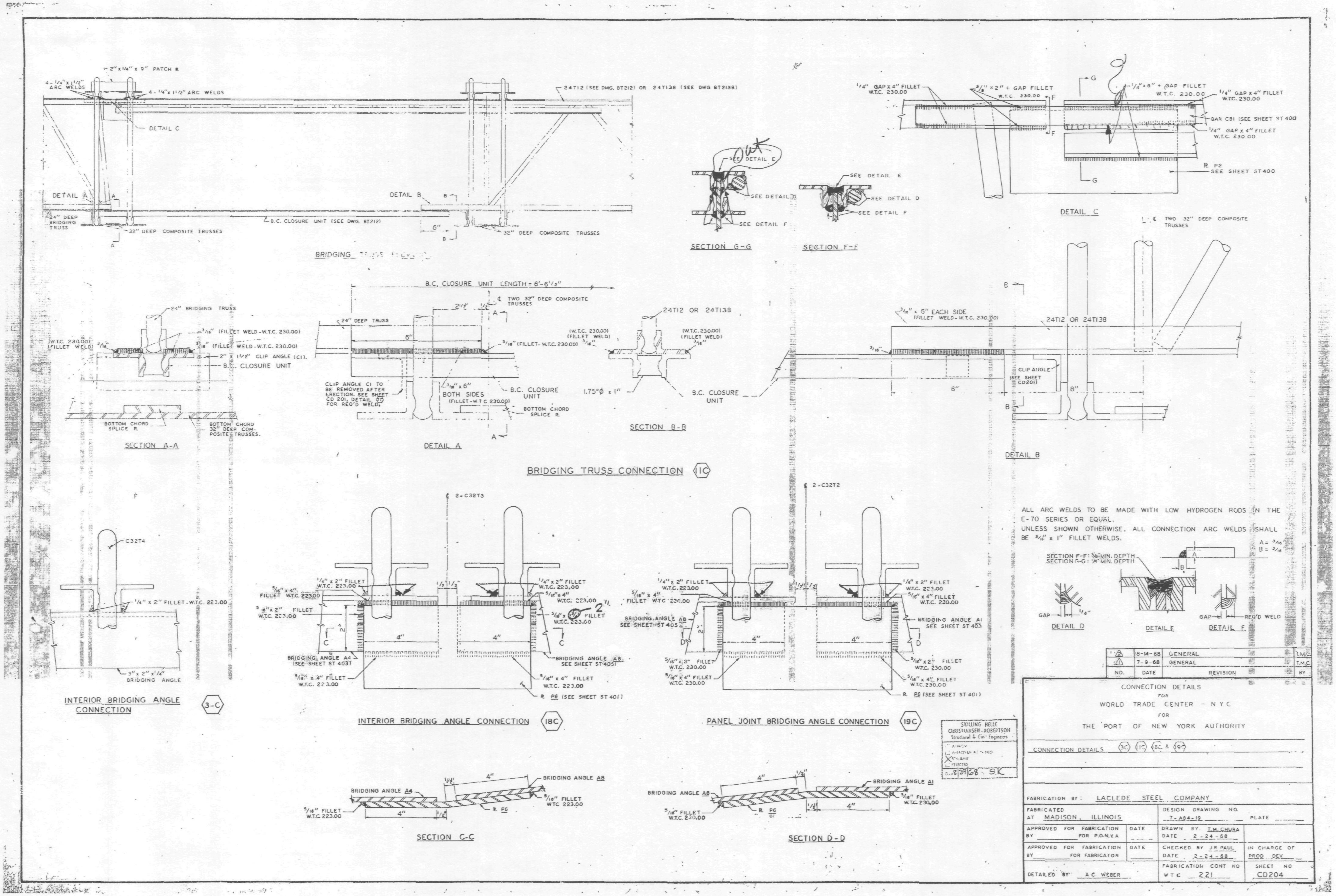

ALL ARC WELDS TO BE MADE WITH LOW HYDROGEN RODS IN THE E-70 SERIES OR EQUAL.
UNLESS SHOWN OTHERWISE, ALL CONNECTION ARC WELDS SHALL BE 3/16" x 1" FILLET WELDS.

NO.	DATE	REVISION	BY
2	8-14-68	GENERAL	T.M.C.
1	7-9-68	GENERAL	T.M.C.

CONNECTION DETAILS
FOR
WORLD TRADE CENTER - N.Y.C.
FOR
THE PORT OF NEW YORK AUTHORITY

CONNECTION DETAILS 3C 1C 18C & 19C

FABRICATION BY: LACLEDE STEEL COMPANY

FABRICATED AT MADISON, ILLINOIS		DESIGN DRAWING NO. 7-AB4-19	PLATE
APPROVED FOR FABRICATION BY ______ FOR P.O.N.Y.A	DATE	DRAWN BY. T.M. CHURA DATE 2-24-68	
APPROVED FOR FABRICATION BY ______ FOR FABRICATOR	DATE	CHECKED BY J.R. PAUL DATE 2-24-68	IN CHARGE OF PROD. DEV.
DETAILED BY A.C. WEBER		FABRICATION CONT NO WTC 221	SHEET NO CD204

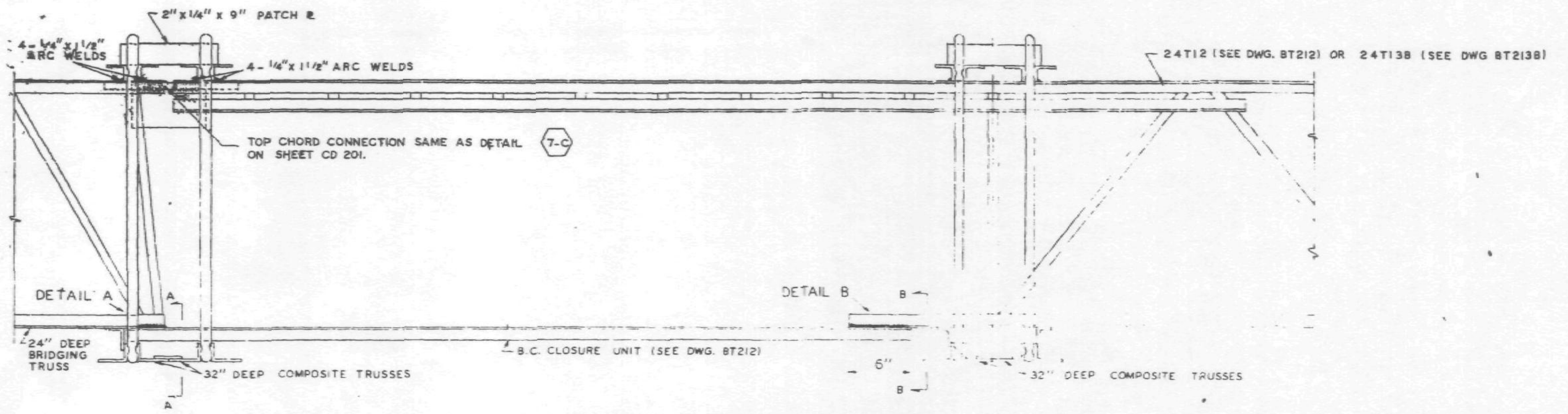

BRIDGING ELEVATION

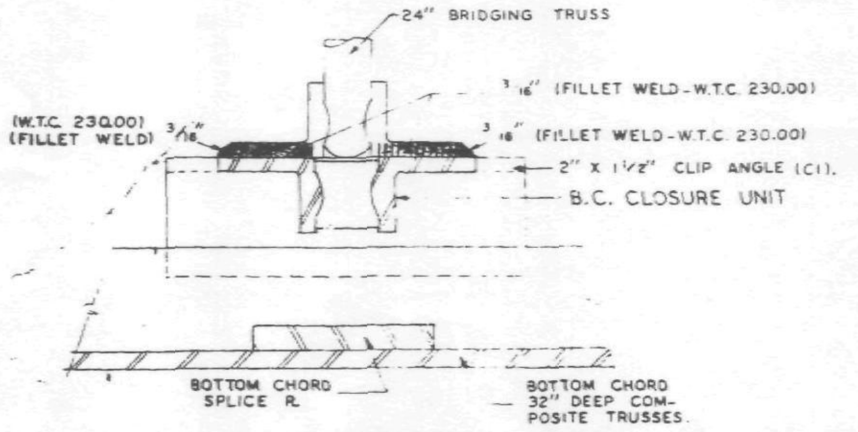

SECTION A-A

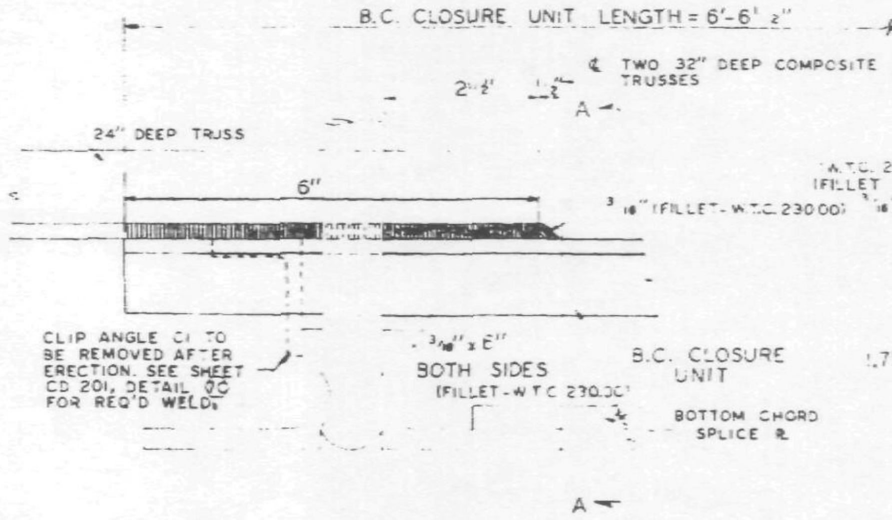

DETAIL A

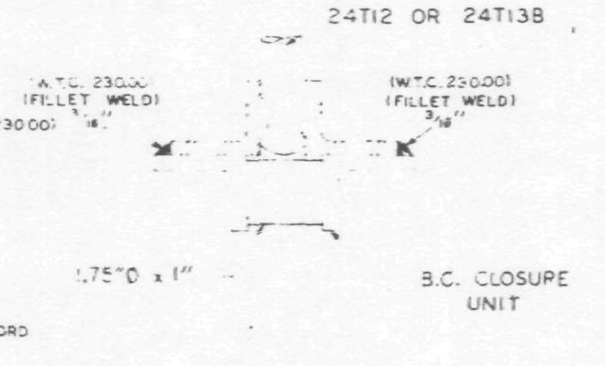

SECTION B-B

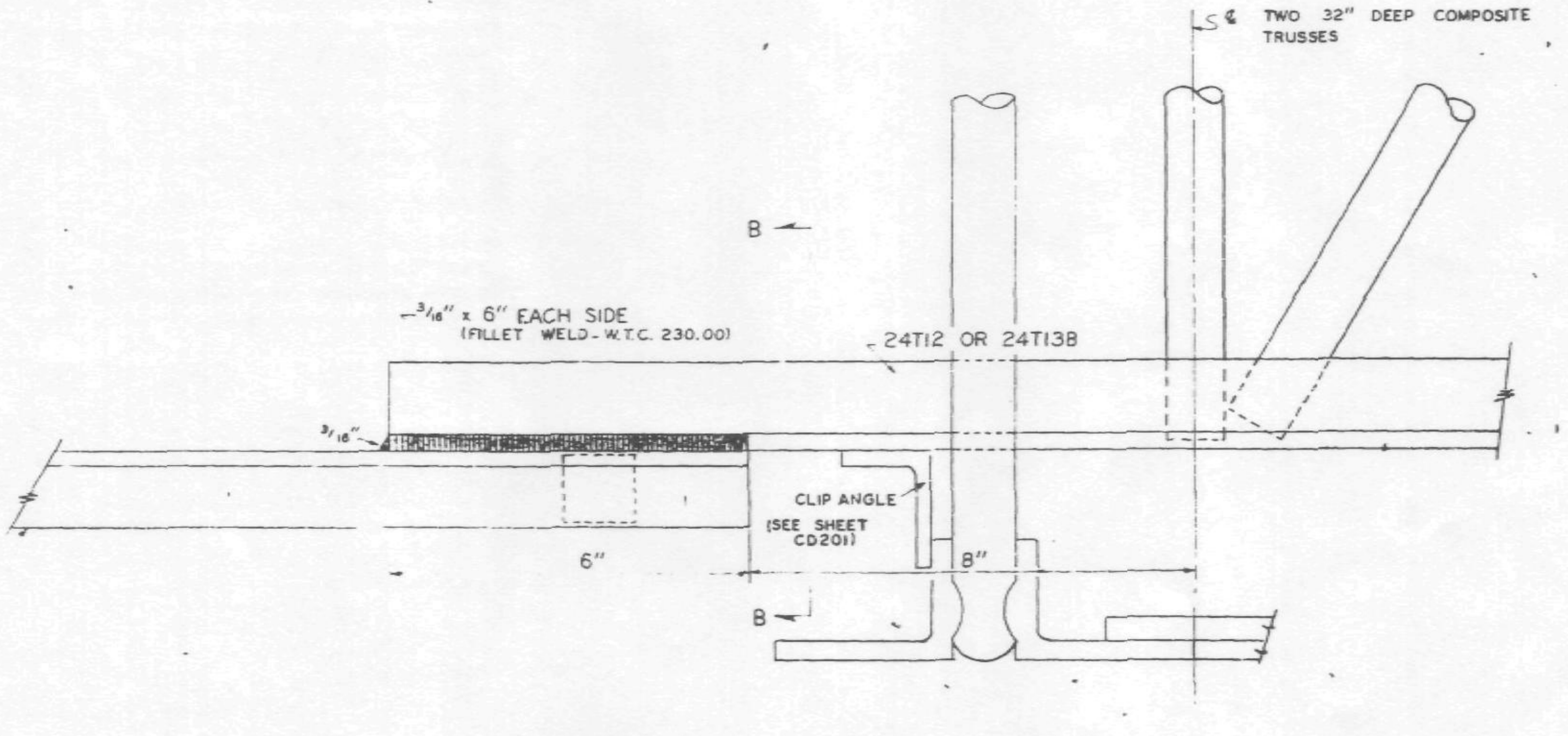

DETAIL B

ALL ARC WELDS TO BE MADE WITH LOW HYDROGEN RODS IN THE E-70 SERIES OR EQUAL.
UNLESS SHOWN OTHERWISE, ALL CONNECTION ARC WELDS SHALL BE 3/16" x 1" FILLET WELDS.

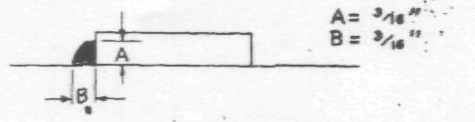

NO.	DATE	REVISION	BY
1	7-9-68	GENERAL	T.M.C.

CONNECTION DETAILS
FOR
WORLD TRADE CENTER - N.Y.C.
FOR
THE PORT OF NEW YORK AUTHORITY

CONNECTION DETAILS FOR 24T12 & 24T138 BRIDGING TRUSSES(1)

FABRICATION BY: LACLEDE STEEL COMPANY

FABRICATED AT MADISON, ILLINOIS		DESIGN DRAWING NO. 7-A84-19	PLATE
APPROVED FOR FABRICATION BY [signature] FOR P.O.N.Y.A	DATE 7/10/68	DRAWN BY: T.M. CHURA DATE: 2-24-68	
APPROVED FOR FABRICATION BY FOR FABRICATOR	DATE	CHECKED BY: J.R. PAUL DATE: 2-24-68	IN CHARGE OF PROD. DEV.
DETAILED BY: A.C. WEBER		FABRICATION CONT. NO. W.T.C. 221	SHEET NO. CD204

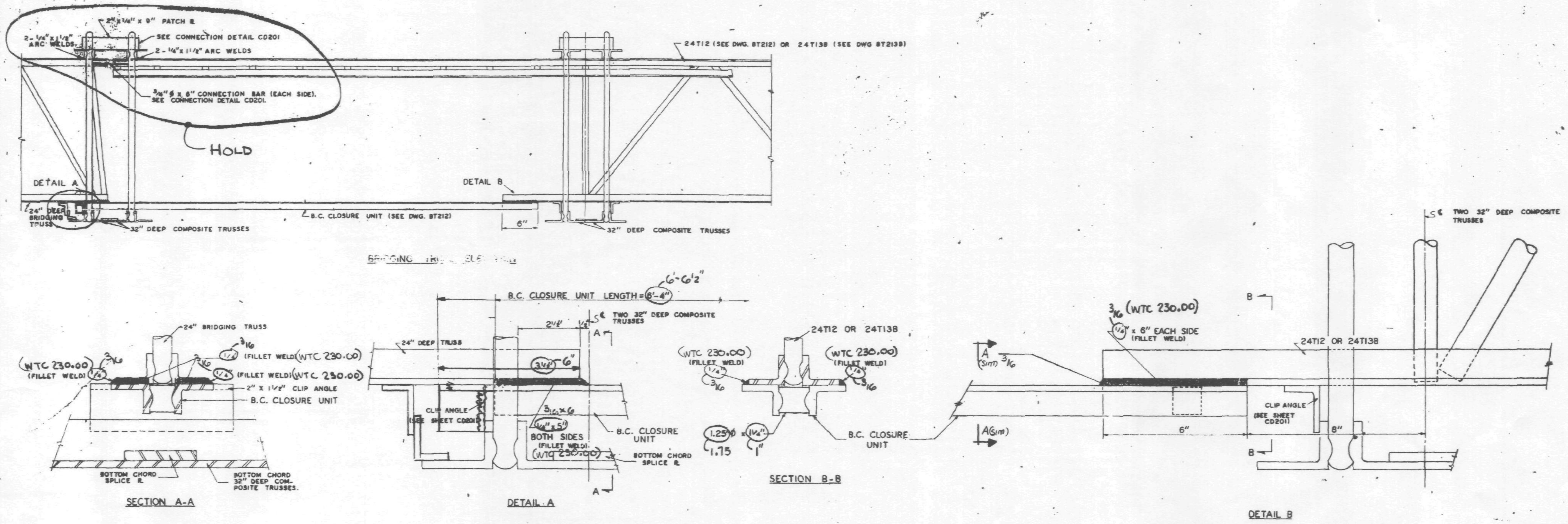

ALL ARC WELDS TO BE MADE WITH LOW HYDROGEN RODS IN THE E-70 SERIES OR EQUAL.
UNLESS SHOWN OTHERWISE, ALL CONNECTION ARC WELDS SHALL BE 1/4" x 1" FILLET WELDS. (3/16)

A = 1/4" 3/16
B = 1/4" 3/16

CONNECTION DETAILS
FOR
WORLD TRADE CENTER - N.Y.C.
FOR
THE PORT OF NEW YORK AUTHORITY

CONNECTION DETAILS FOR 24T12 & 24T138 BRIDGING TRUSSES

FABRICATION BY: LACLEDE STEEL COMPANY

FABRICATED AT MADISON, ILLINOIS		DESIGN DRAWING NO. 7-A84-18	PLATE
APPROVED FOR FABRICATION BY: FOR P.O.N.Y.A	DATE	DRAWN BY: T.M. CHURA DATE: 2-24-68	
APPROVED FOR FABRICATION BY FOR FABRICATOR	DATE	CHECKED BY: J.R. PAUL DATE: 2-24-68	IN CHARGE OF PROD. DEV.
DETAILED BY: A.C. WEBER		FABRICATION CONT. NO. W.T.C 221	SHEET NO. CD204

SKILLING - HELLE CHRISTIANSEN - ROBERTSON
Structural & Civil Engineers
4/24/68 SK

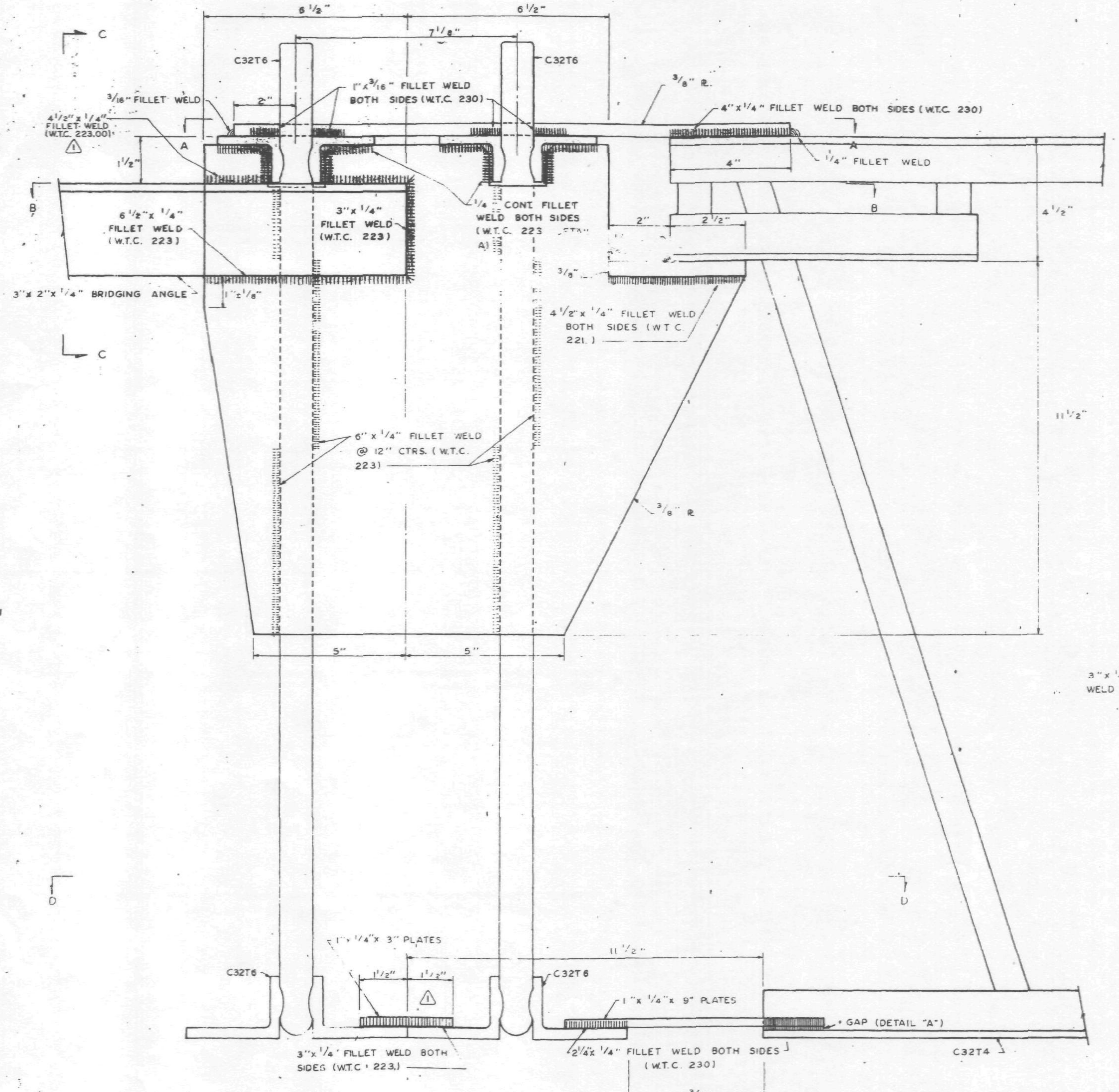

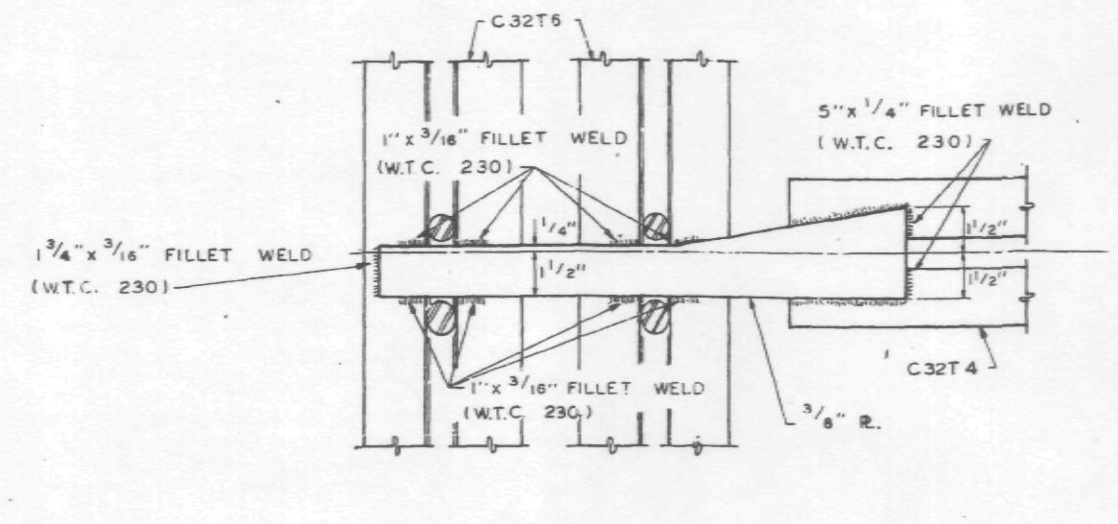

SECTION A-A

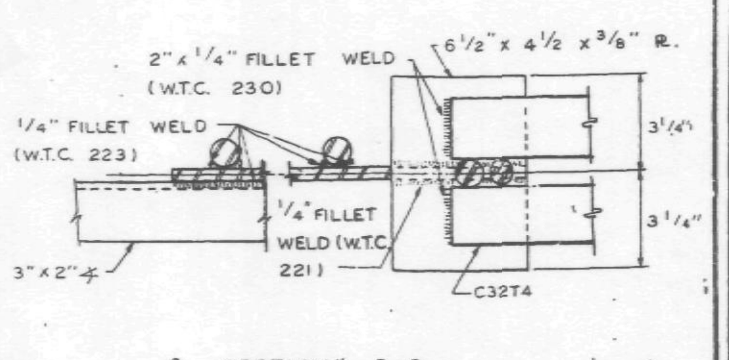

SECTION B-B

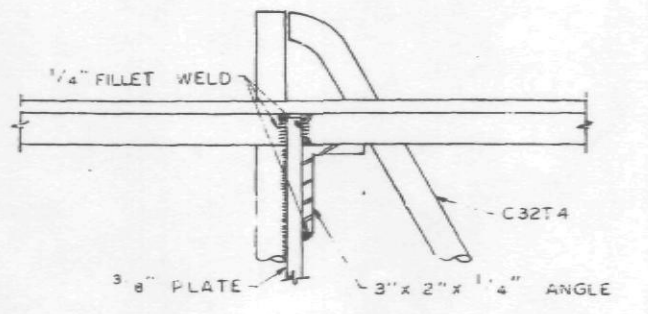

SECTION C-C

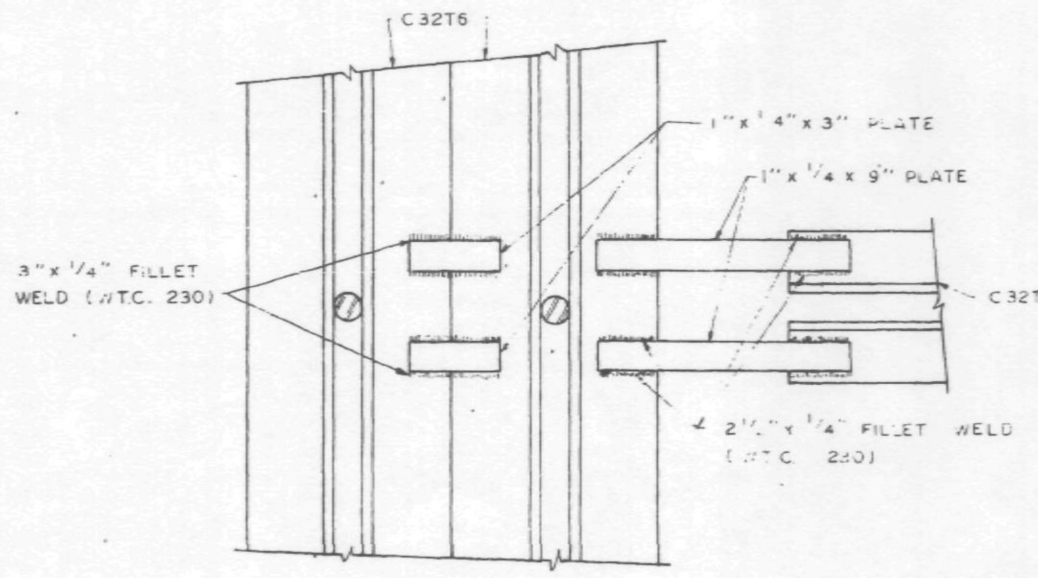

SECTION D-D

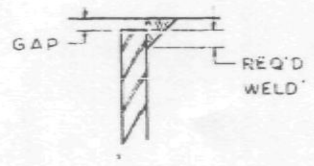

DETAIL "A"

C32T4 TO 3" x 2" CONNECTION DETAIL (15-C)

REF. DR...

..84-12	5-8-68
7-A84-13.2	5-6-68
7-A81-8	5-10-68
7-A81-12	5-10-68

NOTE
1. ALL ARC WELDS TO BE MADE WITH LOW HYDROGEN RODS IN THE E-70 SERIES OR EQUAL.
2. ALL PLATES TO BE ASTM A36 (1)

NO.	DATE	REVISION	BY
1	6-20-68	WELD, NOTE, DIMENSIONS ADDED	G.D.C

CONNECTION DETAILS
FOR
WORLD TRADE CENTER - N.Y.C.
FOR
THE PORT OF NEW YORK AUTHORITY

C32T4 CONNECTING TO 3" x 2" BRIDGING ANGLE, DETAIL 15-C

FABRICATION BY: LACLEDE STEEL COMPANY

FABRICATED AT MADISON, ILLINOIS		DESIGN DRAWING NO. 7-A84-121 5-17-68	PLATE
APPROVED FOR FABRICATION BY GW FOR P.O.N.Y.A.	DATE 6/25/68	DRAWN BY: [signature] DATE MAY 14, 1968	
APPROVED FOR FABRICATION BY FOR FABRICATOR	DATE	CHECKED BY: T.M. CHURA DATE: MAY 15, 1968	IN CHARGE OF PROD. DEV.
LACLEDE STEEL CO. DETAILED BY: A.C. WEBER		FABRICATION CONT. NO. W.T.C. 221	SHEET NO. CD 205

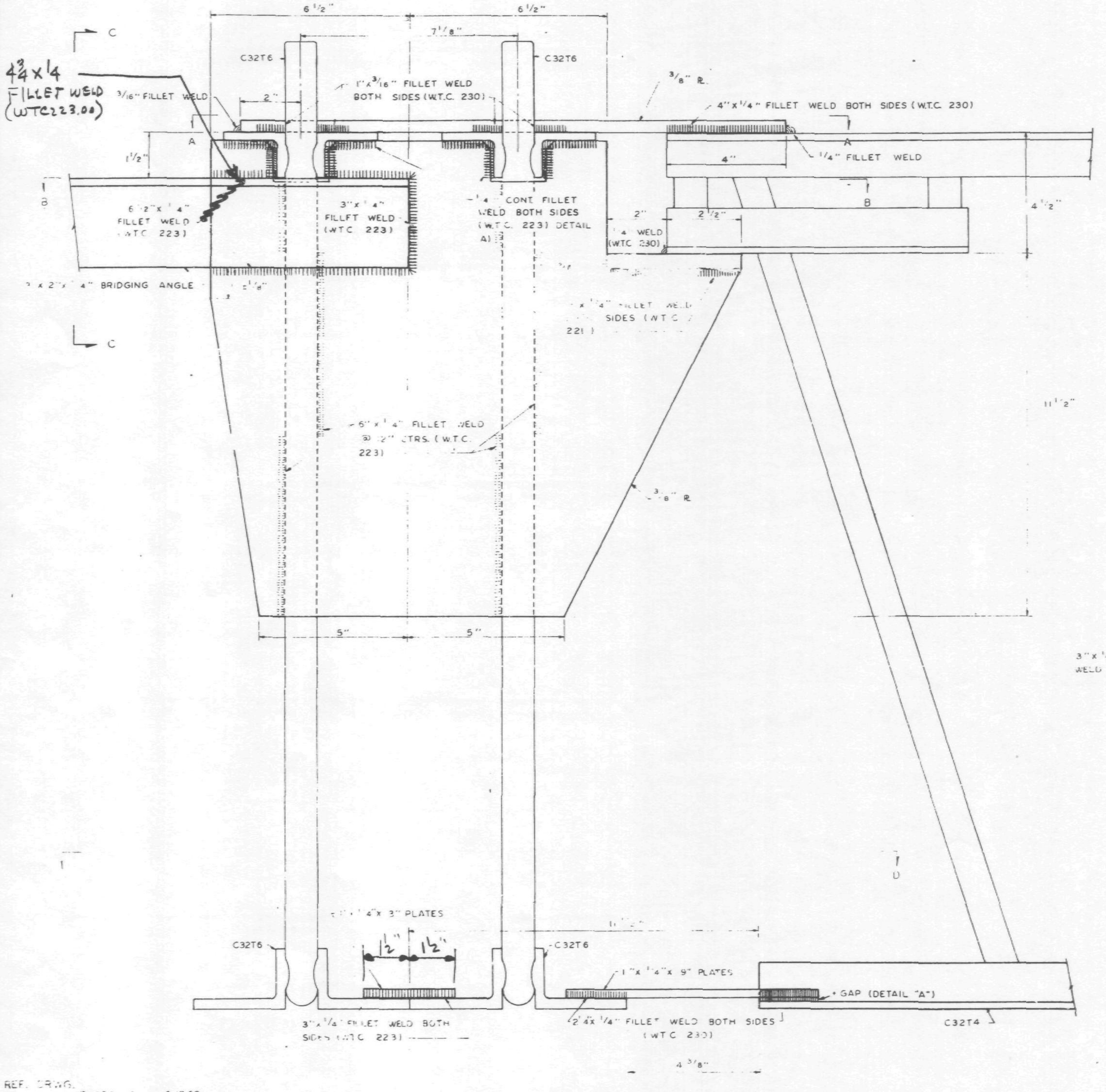

C32T4 TO 3" x 2" CONNECTION DETAIL (15-C)

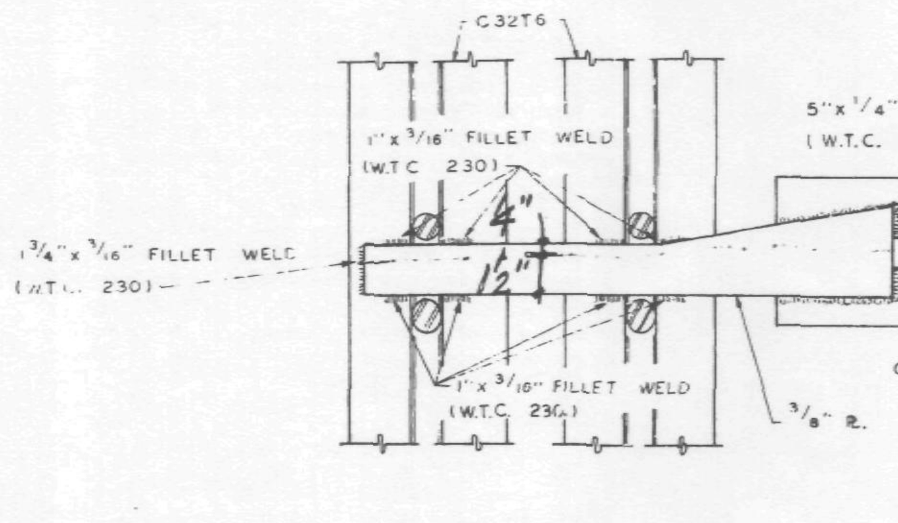

SECTION A-A

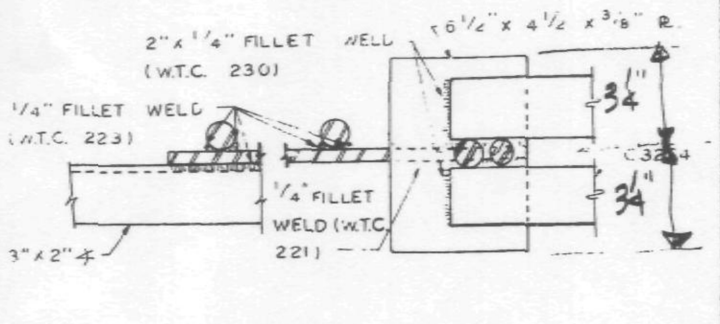

SECTION B-B

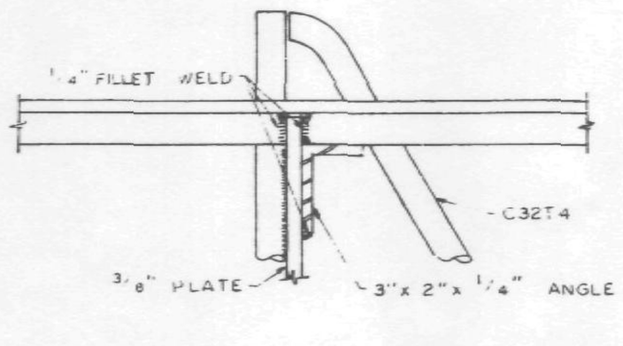

SECTION C-C

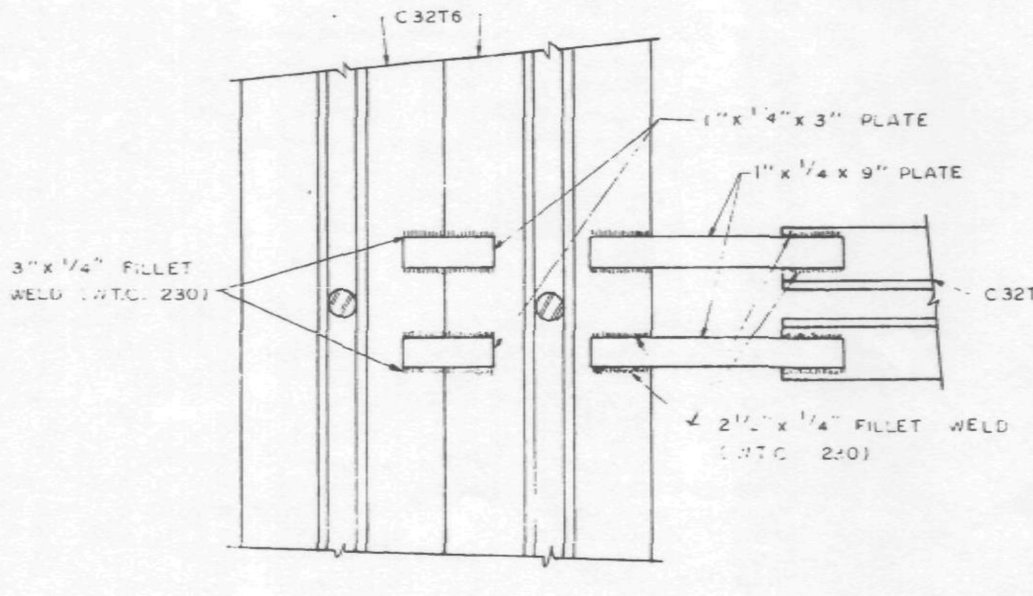

SECTION D-D

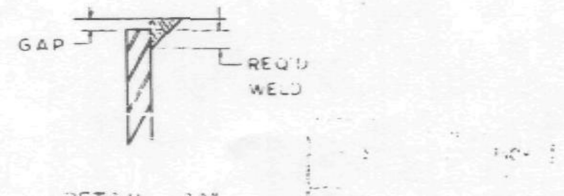

DETAIL "A"

6/13/68

REF. DRWG.

7-A84-12	5-17-68
[illegible] 22	5-17-68
[illegible] -8	4-1-68
7-A8[illegible]-12	4-1-68

NOTE

1. ALL ARC WELDS TO BE MADE WITH LOW HYDROGEN RODS IN THE E-70 SERIES OR EQUAL.
2. ALL PLATE TO BE ASTM A36.

CONNECTION DETAILS
FOR
WORLD TRADE CENTER - N.Y.C.
FOR
THE PORT OF NEW YORK AUTHORITY

C32T4 CONNECTING TO 3" x 2" BRIDGING ANGLE, DETAIL 15-C

FABRICATION BY: LACLEDE STEEL COMPANY			
FABRICATED AT MADISON, ILLINOIS		DESIGN DRAWING NO. 7-A84-121 5-17-68	PLATE
APPROVED FOR FABRICATION BY ____ FOR P.O.N.Y.A.	DATE	DRAWN BY: [signature] DATE MAY 14, 1968	
APPROVED FOR FABRICATION BY ____ FOR FABRICATOR	DATE	CHECKED BY: T.M. CHURA DATE: MAY 15, 1968	IN CHARGE OF PROD. DEV.
DETAILED BY: A.C. WEBER		FABRICATION CONT. NO. W.T.C. 221	SHEET NO. CD 205

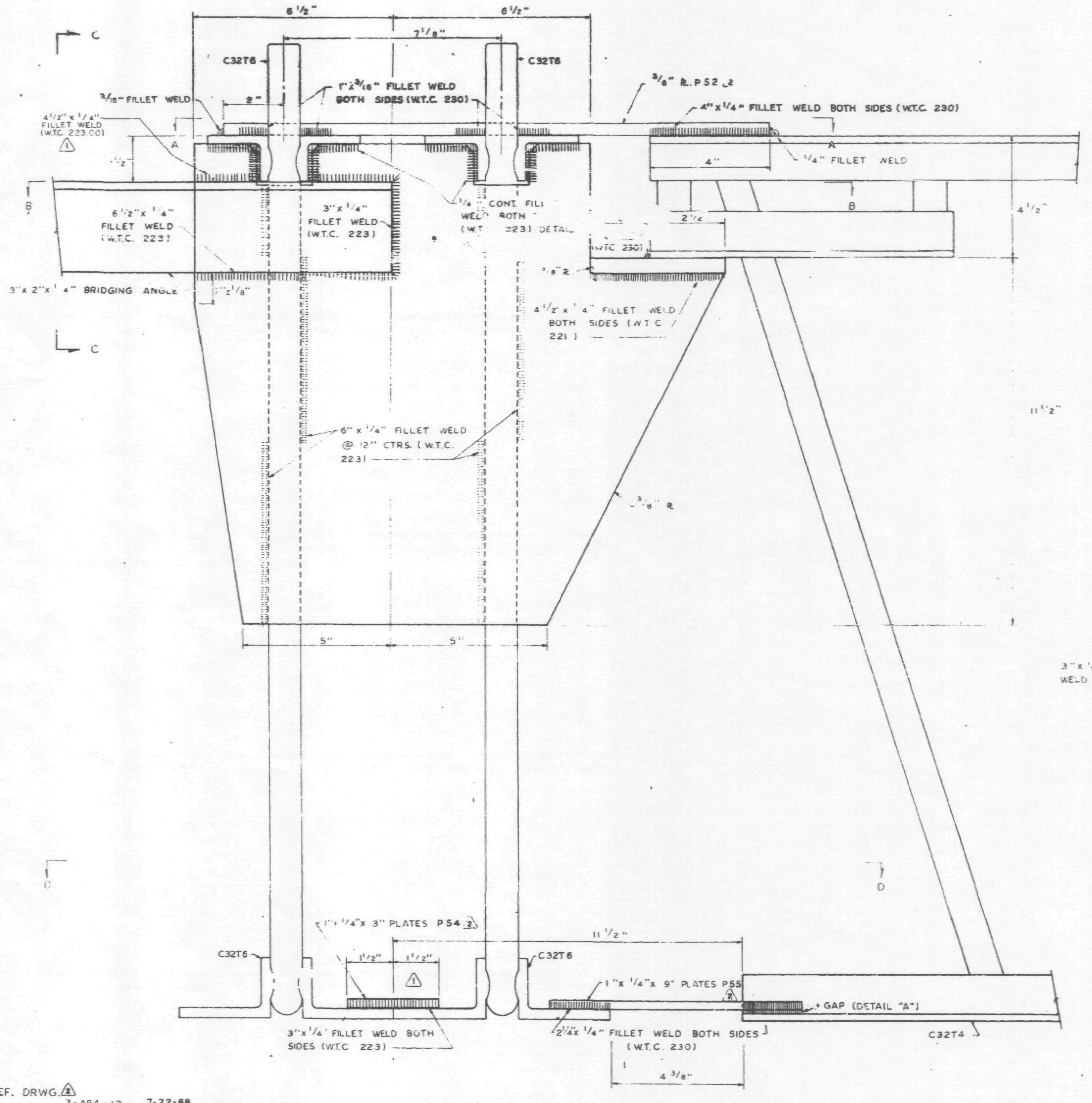

C32T4 TO 3" x 2" CONNECTION DETAIL (15-C)

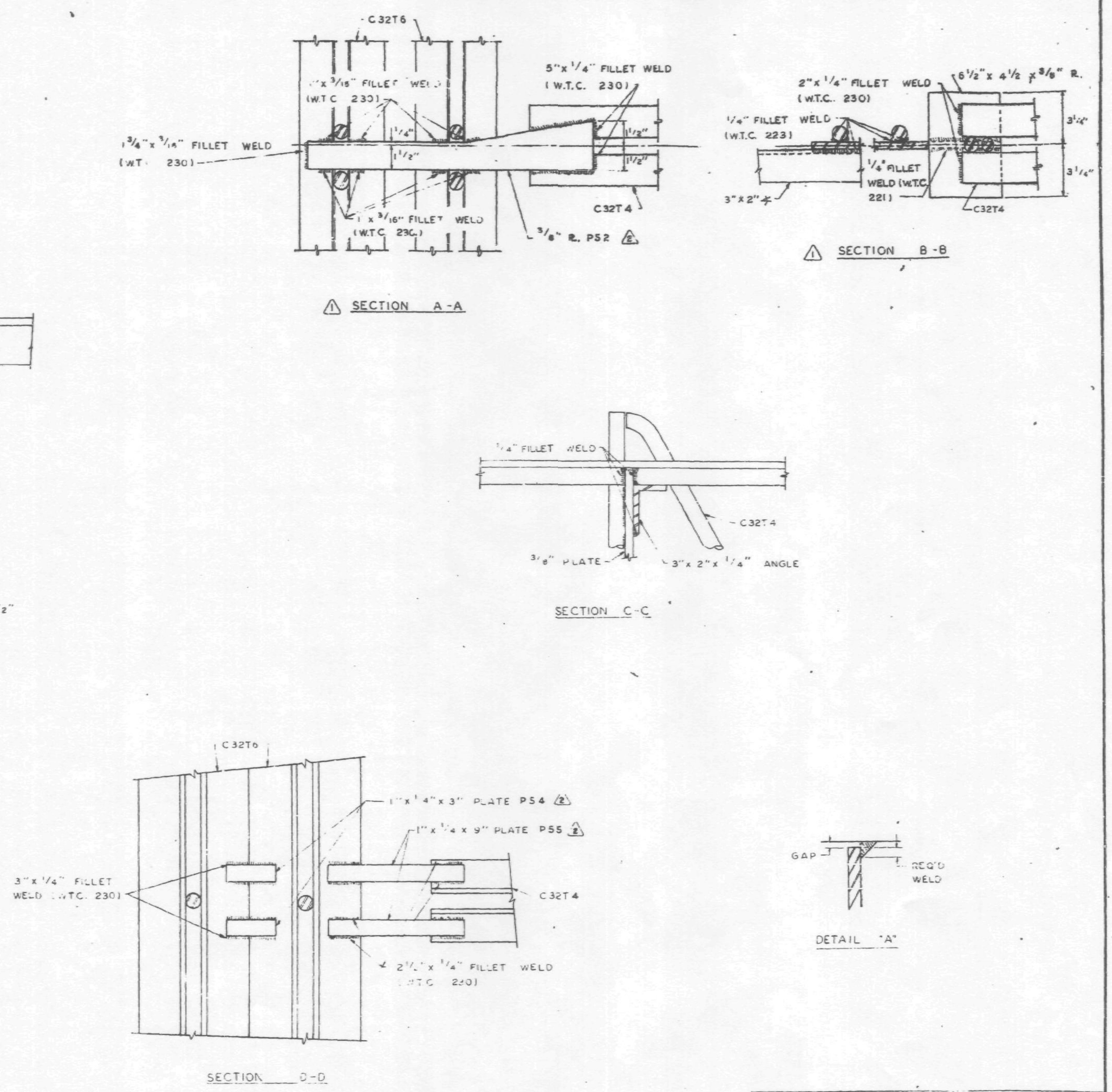

REF. DRWG. (2)

7-AB4-12	7-22-68
7-AB4-13.2	10-15-68
7-AB1-8	7-22-68
7-AB1-12	7-22-68

NOTE
1. ALL ARC WELDS TO BE MADE WITH LOW HYDROGEN RODS IN THE E-70 SERIES OR EQUAL.
2. ALL PLATES TO BE ASTM A36 (1)

NO.	DATE	REVISION	BY
2	4-3-69	AS NOTED	R.J.P.
1	6-20-68	WELD, NOTE, DIMENSIONS ADDED	G.D.C.

CONNECTION DETAILS
FOR
WORLD TRADE CENTER - N.Y.C.
FOR
THE PORT OF NEW YORK AUTHORITY

C32T4 CONNECTING TO 3" x 2" BRIDGING ANGLE, DETAIL 15-C

FABRICATION BY: LACLEDE STEEL COMPANY

FABRICATED AT MADISON, ILLINOIS		DESIGN DRAWING NO. 7-AB4-121 5-17-68	PLATE
APPROVED FOR FABRICATION BY James White FOR P.O.N.Y.A.	DATE 4/15/69	DRAWN BY: [illegible] DATE MAY 14, 1968	
APPROVED FOR FABRICATION BY FOR FABRICATOR	DATE	CHECKED BY: T.M. CHURA DATE: MAY 15, 1968	IN CHARGE OF PROD. DEV.
LACLEDE STEEL CO. DETAILED BY: A.C. WEBER		FABRICATION CONT. NO. W...C. 221	SHEET NO. CD 205

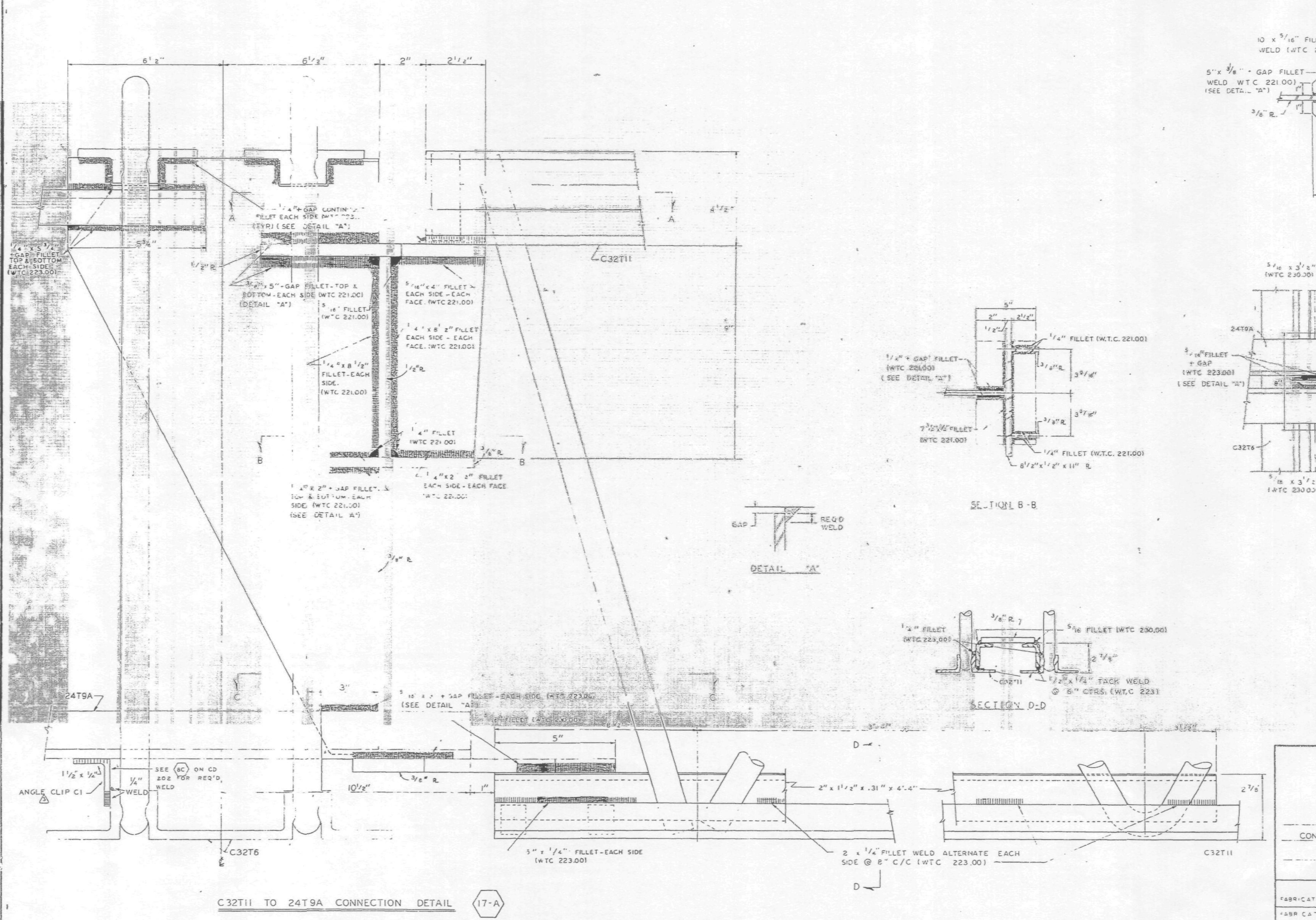

ALL ARC WELDS TO BE MADE WITH LOW HYDROGEN RODS IN THE E-70 SERIES OR EQUAL.
ALL PLATES TO BE GRADE A36 STEEL.

REF. DWGS.	
7-AB4-11.2	5-6-68
7-AB4-11.1	5-6-68
7-AB2-4	4-1-68
7-AB1-12	5-10-68
7-AB1-9	5-10-68

CONNECTION DETAILS
FOR
WORLD TRADE CENTER - NYC
FOR
THE PORT OF NEW YORK AUTHORITY

CONNECTION BETWEEN C32T11 AND 24T9A 17-C

FABRICATION BY LACLEDE STEEL COMPANY
FABRICATED AT MADISON, ILLINOIS
DESIGN DRAWING NO. 7-AB4-11.2 PLATE
APPROVED FOR FABRICATION FOR PONYA BY JW DATE 7/12/68
DRAWN BY gdc DATE MAY 14, 1968
CHECKED BY T.M. CHURA DATE MAY 15, 1968
IN CHARGE OF PROD. DEV.
FABRICATION CONT. NO. 221
SHEET NO. CD 206

NO.	DATE	REVISION	BY
3	7-10-68	CLIP ANGLE C1	T.M.C.
2	6-21-68	GENERAL	T.M.C.
1	5-20-68	WELD DETAILS	L.W.H.

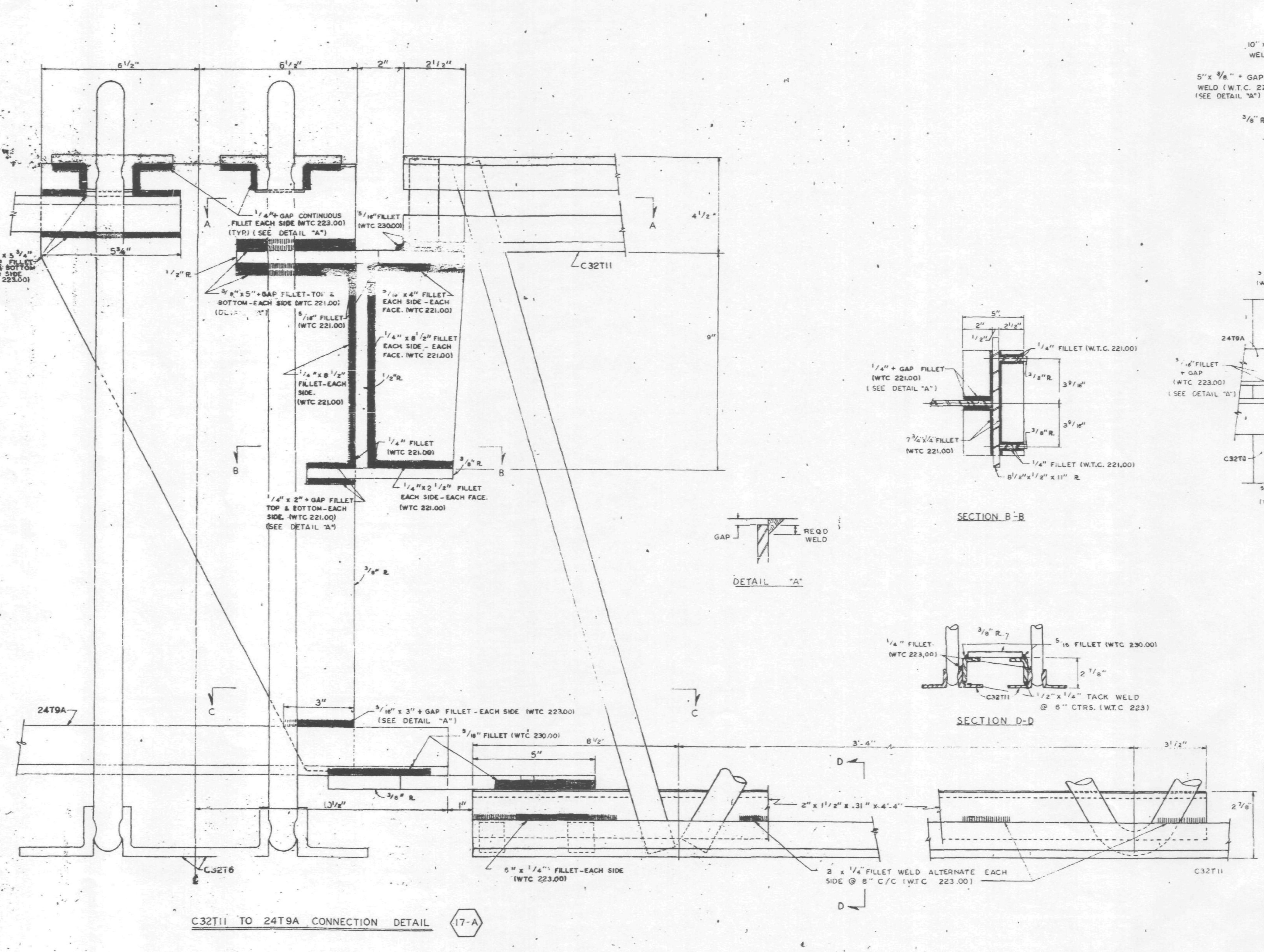

ALL ARC WELDS TO BE MADE WITH LOW HYDROGEN RODS IN THE E-70 SERIES OR EQUAL.
ALL PLATES TO BE GRADE A36 STEEL.

REF. DWGS.

7-AB4-11.2	5 6-68
7-AB4-11.1	5 6-68
7-AB2-4	4-1-68
7-AB1-12	5-10-68
7-AB1-9	5-10-68

CONNECTION DETAILS
FOR
WORLD TRADE CENTER - N.Y.C
FOR
THE PORT OF NEW YORK AUTHORITY

CONNECTION BETWEEN C32T11 AND 24T9A 17-C

FABRICATION BY LACLEDE STEEL COMPANY

FABRICATED AT MADISON, ILLINOIS

DESIGN DRAWING NO. 7-AB4-11.2 PLATE

APPROVED FOR FABRICATION FOR P.O.N.Y.A BY JW DATE 6/25/68

DRAWN BY gdc DATE MAY 14, 1968

APPROVED FOR FABRICATION FOR FABRICATOR BY LACLEDE STEEL CO. DATE

CHECKED BY T.M.CHURA DATE MAY 15, 1968

IN CHARGE OF PROD. DEV.

DETAILED BY A.C. WEBER

FABRICATION CONT. NO. W.T.C 221

SHEET NO CD 206

NO.	DATE	REVISION	BY
2	6-21-68	GENERAL	T.M.C.
1	5-20-68	WELD DETAILS	L.W.H.

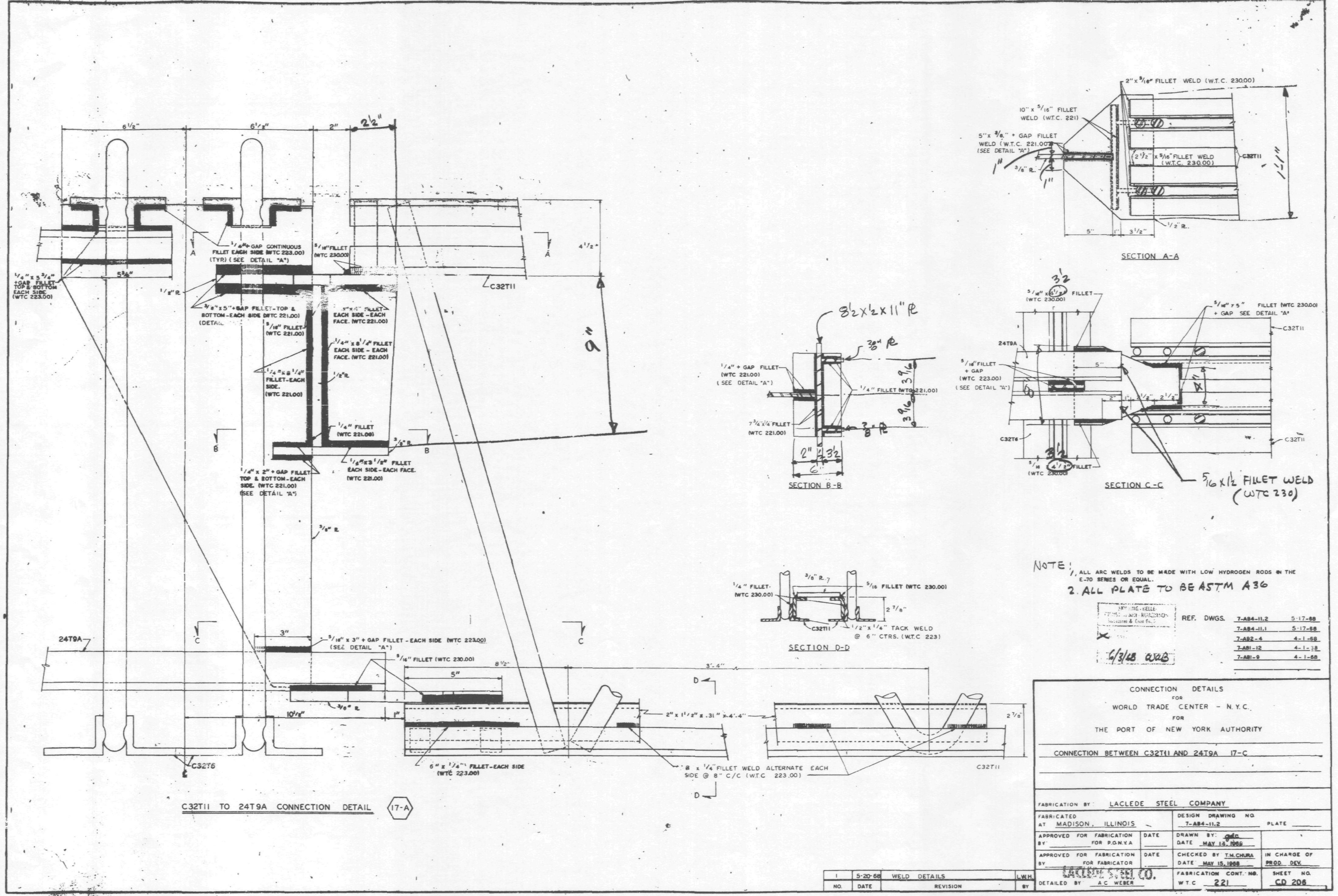
C32T11 TO 24T9A CONNECTION DETAIL
17-A
SECTION A-A
SECTION B-B
SECTION C-C
SECTION D-D
8½ x ½ x 11" ℞
5/16 x 1½ FILLET WELD (WTC 230)
1/4" + GAP CONTINUOUS FILLET EACH SIDE (WTC 223.00) (TYP.) (SEE DETAIL "A")
1/4" x 5 3/4" + GAP FILLET TOP & BOTTOM EACH SIDE (WTC 223.00)
3/8" x 5" + GAP FILLET - TOP & BOTTOM - EACH SIDE (WTC 221.00)
5/16" FILLET (WTC 230.00)
5/16" FILLET (WTC 221.00)
1/4" x 8 1/2" FILLET EACH SIDE - EACH FACE. (WTC 221.00)
1/4" FILLET (WTC 221.00)
1/4" x 2" + GAP FILLET TOP & BOTTOM - EACH SIDE. (WTC 221.00) (SEE DETAIL "A")
5/16" x 3 1/2" FILLET EACH SIDE - EACH FACE. (WTC 221.00)
5/16" x 3" + GAP FILLET - EACH SIDE (WTC 223.00) (SEE DETAIL "A")
5/16" FILLET (WTC 230.00)
6" x 1/4" FILLET - EACH SIDE (WTC 223.00)
8" x 1/4" FILLET WELD ALTERNATE EACH SIDE @ 8" C/C (W.T.C. 223.00)
2" x 1 1/2" x .31" x 4'-4"
2" x 5/16" FILLET WELD (W.T.C. 230.00)
10" x 5/16" FILLET WELD (W.T.C. 221)
5" x 3/8" + GAP FILLET WELD (W.T.C. 221.00) (SEE DETAIL "A")
2 1/2" x 5/16" FILLET WELD (W.T.C. 230.00)
1/4" + GAP FILLET (WTC 221.00) (SEE DETAIL "A")
1/4" FILLET (WTC 221.00)
7 3/4 x 1/4 FILLET (WTC 221.00)
5/16" x 5" FILLET (WTC 230.00) + GAP SEE DETAIL "A"
5/16" FILLET + GAP (WTC 223.00) (SEE DETAIL "A")
1/4" FILLET (WTC 230.00)
5/16 FILLET (WTC 230.00)
1/2" x 1/4" TACK WELD @ 6" CTRS. (W.T.C. 223)
C32T11
C32T6
24T9A
NOTE: 1. ALL ARC WELDS TO BE MADE WITH LOW HYDROGEN RODS IN THE E-70 SERIES OR EQUAL.
2. ALL PLATE TO BE ASTM A36
6/3/68 WAB
REF. DWGS. 7-AB4-11.2 5-17-68
7-AB4-11.1 5-17-68
7-AB2-4 4-1-68
7-AB1-12 4-1-68
7-AB1-9 4-1-68
CONNECTION DETAILS FOR WORLD TRADE CENTER - N.Y.C. FOR THE PORT OF NEW YORK AUTHORITY
CONNECTION BETWEEN C32T11 AND 24T9A 17-C
FABRICATION BY: LACLEDE STEEL COMPANY
FABRICATED AT MADISON, ILLINOIS
DESIGN DRAWING NO. 7-AB4-11.2
PLATE
APPROVED FOR FABRICATION BY FOR P.O.N.Y.A DATE
DRAWN BY: gdc DATE MAY 14, 1968
APPROVED FOR FABRICATION BY FOR FABRICATOR DATE
CHECKED BY T.M.CHURA DATE MAY 15, 1968
IN CHARGE OF PROD. DEV.
DETAILED BY A C WEBER
LACLEDE STEEL CO.
FABRICATION CONT. NO. W.T.C 221
SHEET NO. CD 206
1 5-20-68 WELD DETAILS L.W.H.
NO. DATE REVISION BY

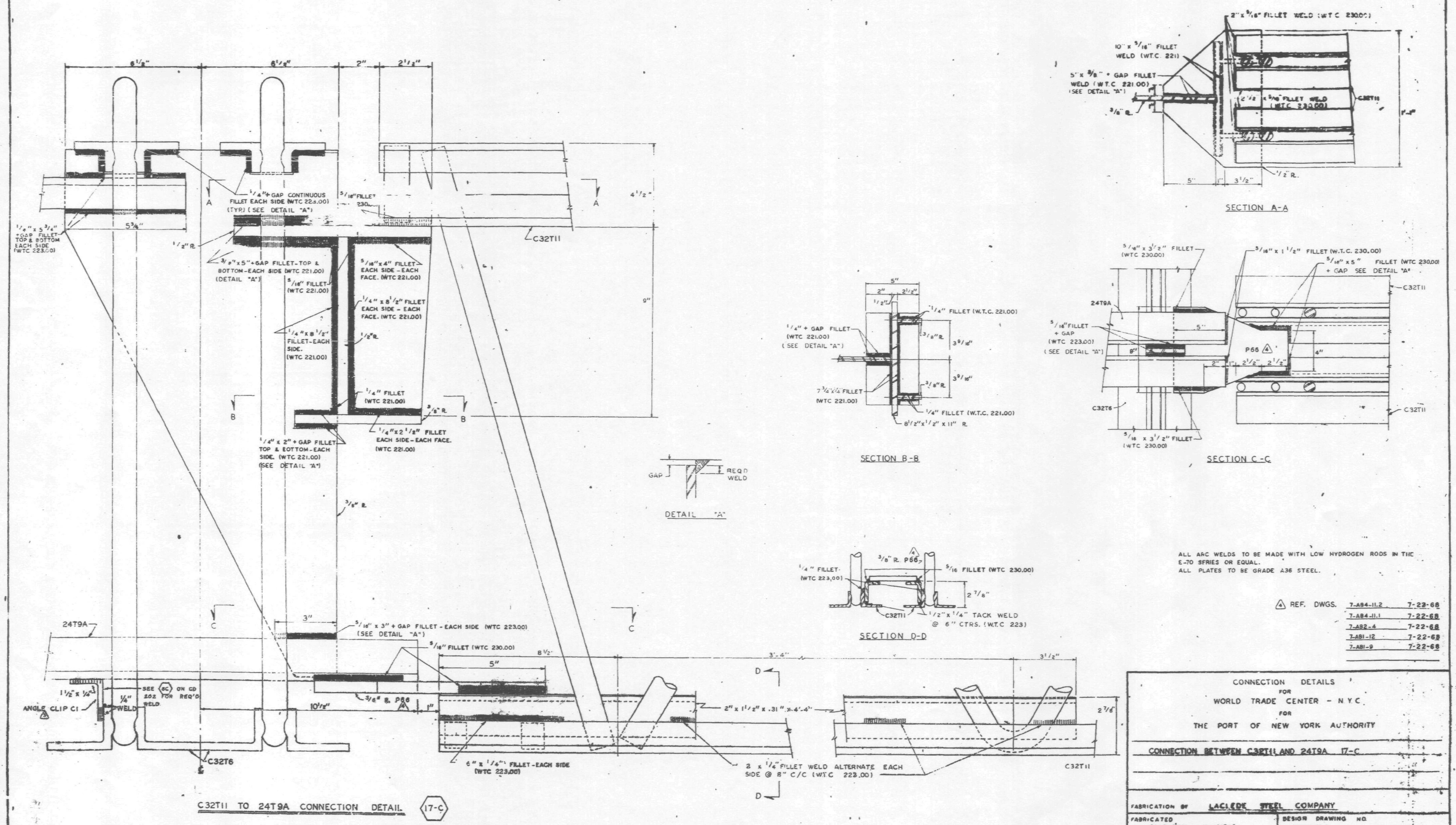

ALL ARC WELDS TO BE MADE WITH LOW HYDROGEN RODS IN THE E-70 SERIES OR EQUAL.
ALL PLATES TO BE GRADE A36 STEEL.

△4 REF. DWGS.

7-AB4-11.2	7-22-68
7-AB4-11.1	7-22-68
7-AB2-4	7-22-68
7-AB1-12	7-22-68
7-AB1-9	7-22-68

NO.	DATE	REVISION	BY
△4	4-3-69	AS NOTED	R.J.P.
△3	7-10-68	ANGLE CLIP C1	T.M.C.
△2	8-21-68	GENERAL	T.M.C.
△1	5-20-68	WELD DETAILS	L.W.H.

CONNECTION DETAILS
FOR
WORLD TRADE CENTER - N.Y.C.
FOR
THE PORT OF NEW YORK AUTHORITY

CONNECTION BETWEEN C32T11 AND 24T9A 17-C

FABRICATION BY LACLEDE STEEL COMPANY
FABRICATED AT MADISON, ILLINOIS
DESIGN DRAWING NO. 7-AB4-11.2 PLATE
APPROVED FOR FABRICATION FOR P.O.N.Y.A DATE 4/11/69
DRAWN BY gda DATE MAY 14, 1968
APPROVED FOR FABRICATION BY FOR FABRICATOR DATE
CHECKED BY T.M.CIRRA DATE MAY 15, 1968
IN CHARGE OF PROD. DEV.
LACLEDE STEEL CO.
DETAILED BY A.C. WEBER
FABRICATION CONT. NO. W T C 221
SHEET NO. CD 206

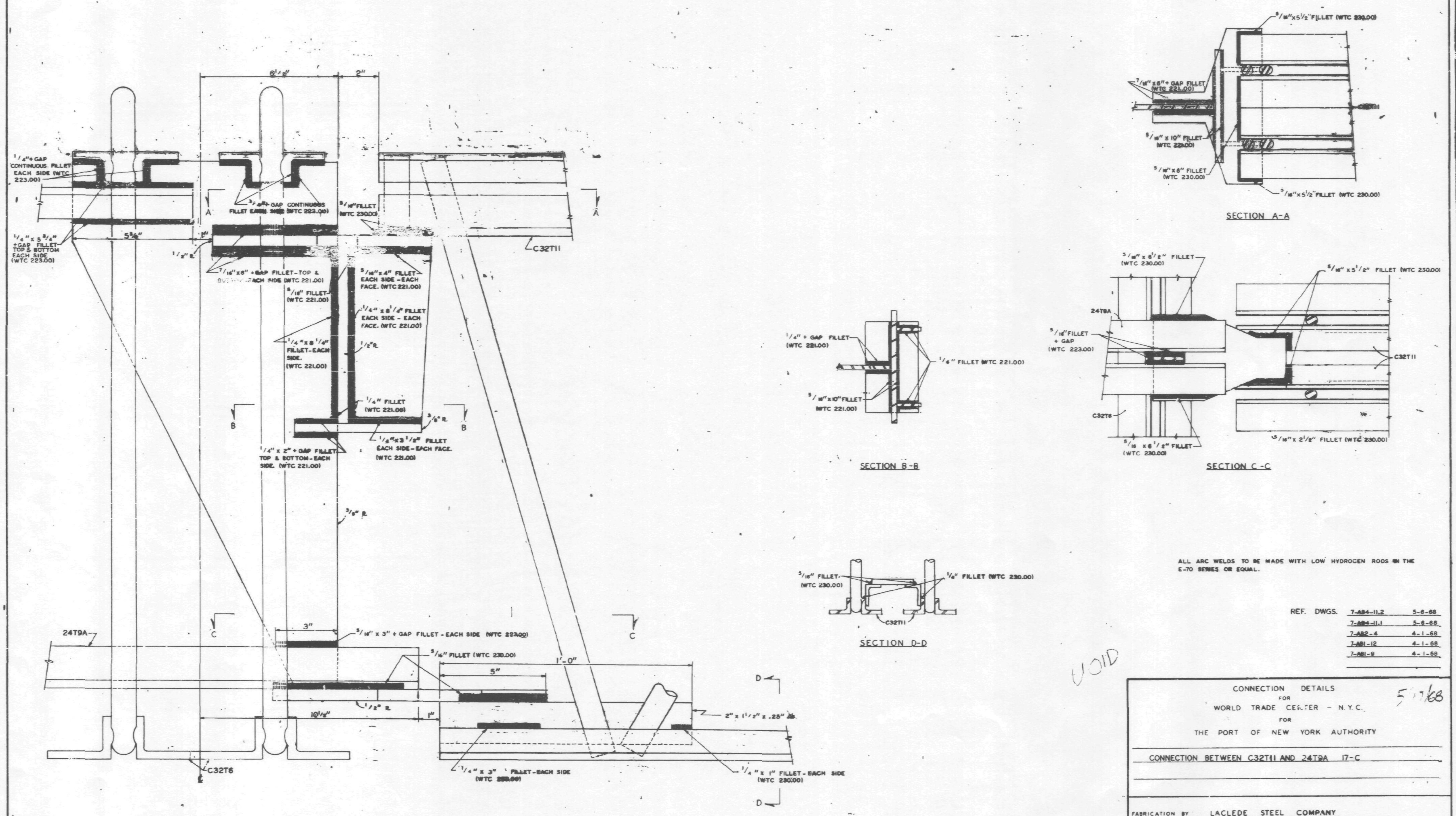

ALL ARC WELDS TO BE MADE WITH LOW HYDROGEN RODS IN THE E-70 SERIES OR EQUAL.

REF. DWGS.	
7-AB4-11.2	5-6-68
7-AB4-11.1	5-6-68
7-AB2-4	4-1-68
7-AB1-12	4-1-68
7-AB1-9	4-1-68

CONNECTION DETAILS
FOR
WORLD TRADE CENTER - N.Y.C.
FOR
THE PORT OF NEW YORK AUTHORITY

5/17/68

CONNECTION BETWEEN C32T11 AND 24T9A 17-C

FABRICATION BY LACLEDE STEEL COMPANY

FABRICATED AT MADISON, ILLINOIS		DESIGN DRAWING NO. 7-AB4-11.2	PLATE
APPROVED FOR FABRICATION BY ______ FOR P.O.N.Y.A.	DATE	DRAWN BY: gdc DATE MAY 14, 1968	
APPROVED FOR FABRICATION BY ______ FOR FABRICATOR	DATE	CHECKED BY T.M.CHURA DATE MAY 15, 1968	IN CHARGE OF PROD. DEV.
DETAILED BY A C WEBER		FABRICATION CONT. NO. W.T.C 221	SHEET NO. CD 206

NO.	DATE	REVISION	BY

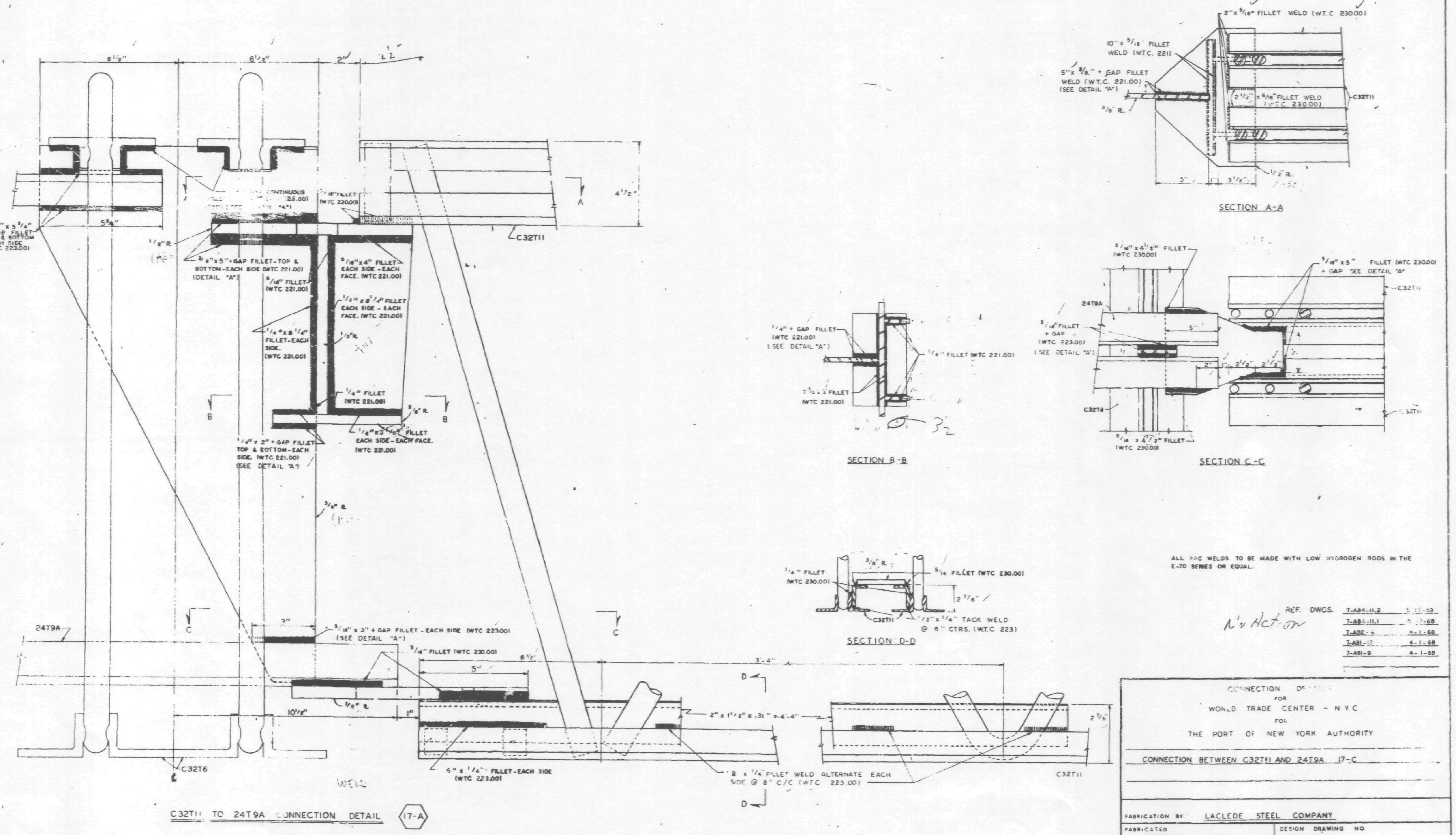

ALL ARC WELDS TO BE MADE WITH LOW HYDROGEN RODS IN THE E-70 SERIES OR EQUAL.

N'y Action

REF. DWGS.	
7-AB4-11.2	[illegible]
7-AB4-11.1	[illegible]-68
7-AB2-[illegible]	5-1-68
7-AB1-[illegible]	4-1-68
7-AB1-9	4-1-68

CONNECTION DE[illegible]
FOR
WORLD TRADE CENTER - N.Y.C
FOR
THE PORT OF NEW YORK AUTHORITY

CONNECTION BETWEEN C32T11 AND 24T9A 17-C

FABRICATION BY LACLEDE STEEL COMPANY

FABRICATED AT MADISON, ILLINOIS		DESIGN DRAWING NO. 7-AB4-11.2	PLATE
APPROVED FOR FABRICATION BY FOR P.O.N.Y.A	DATE	DRAWN BY gdc DATE MAY 14, 1968	
APPROVED FOR FABRICATION BY FOR FABRICATOR	DATE	CHECKED BY T.M.CHURA DATE MAY 15, 1968	IN CHARGE OF PROD. DEV.
DETAILED BY A.C. WEBER		FABRICATION CONT. NO. W.T.C 221	SHEET NO. CD 206

NO.	DATE	REVISION	BY
1	5-20-68	WELD DETAILS	L.W.H.

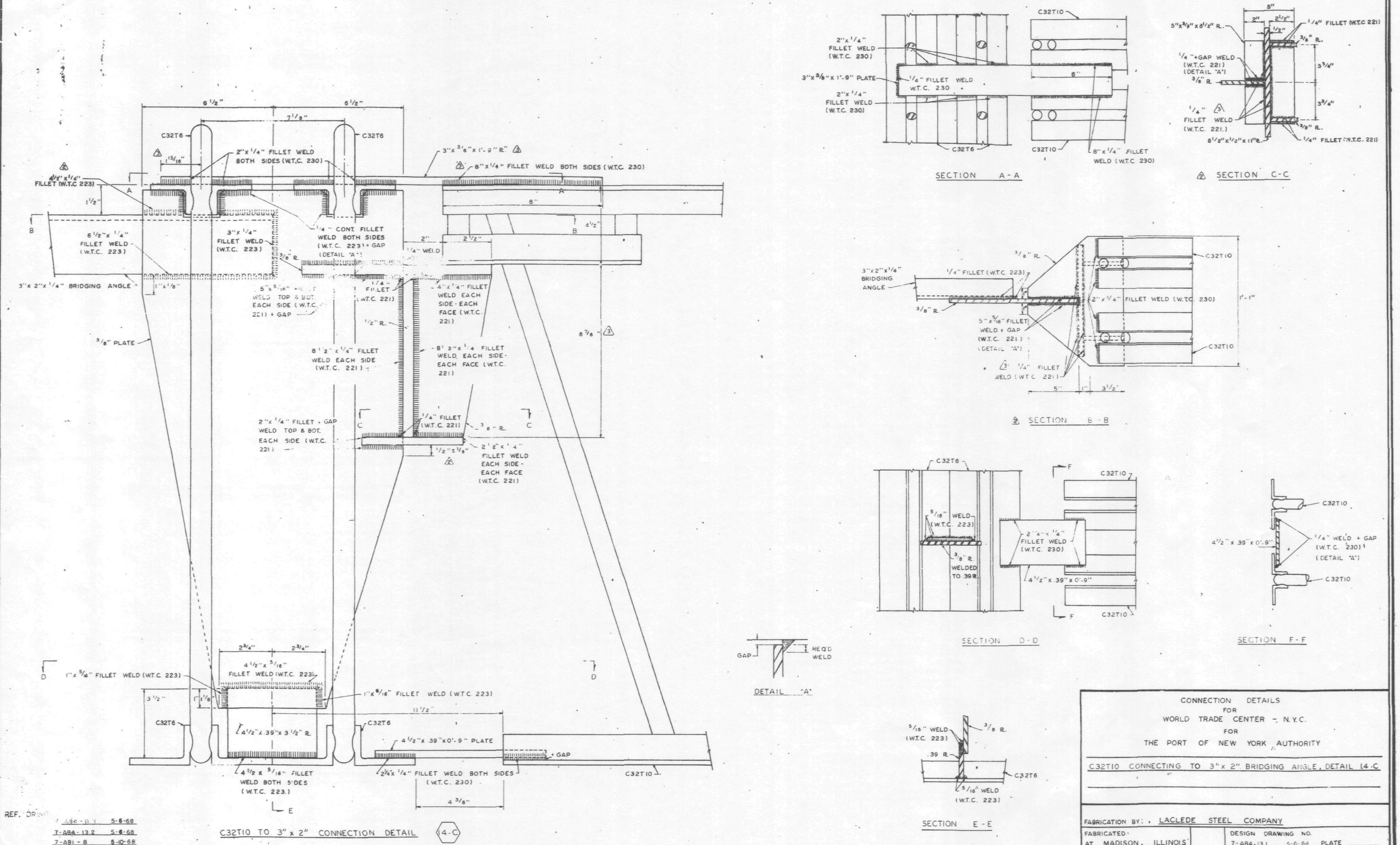

REF. DRWGS.

7-A84-13.1	5-6-68
7-A84-13.2	5-6-68
7-A81-8	5-10-68
7-A81-12	5-10-68

NOTE
1. ALL ARC WELDS TO BE MADE WITH LOW HYDROGEN RODS IN THE E-70 SERIES OR EQUAL.
2. ALL PLATES TO BE ASTM A36. (2)

NO.	DATE	REVISION	BY
3	6-20-68	DIMENSION & WELDS	L.W.H.
2	6-6-68	DIMENSIONS ADDED, NOTES	G.D.C.
1	5-20-68	WELD CORRECTIONS	L.W.H.

CONNECTION DETAILS
FOR
WORLD TRADE CENTER - N.Y.C.
FOR
THE PORT OF NEW YORK AUTHORITY

C32T10 CONNECTING TO 3" x 2" BRIDGING ANGLE, DETAIL 14-C

FABRICATION BY: LACLEDE STEEL COMPANY
FABRICATED AT MADISON, ILLINOIS
DESIGN DRAWING NO. 7-A84-13.1 5-6-68 PLATE
APPROVED FOR FABRICATION BY JW FOR P.O.N.Y.A. DATE 6/25/68
DRAWN BY: [signature] DATE MAY 14, 1968
APPROVED FOR FABRICATION BY ______ FOR FABRICATOR DATE ______
CHECKED BY: T.M. CHURA DATE: MAY 15, 1968
IN CHARGE OF PROD. DEV.
LACLEDE STEEL CO.
DETAILED BY: A.C. WEBER
FABRICATION CONT. NO. W.T.C. 221
SHEET NO. CD 207

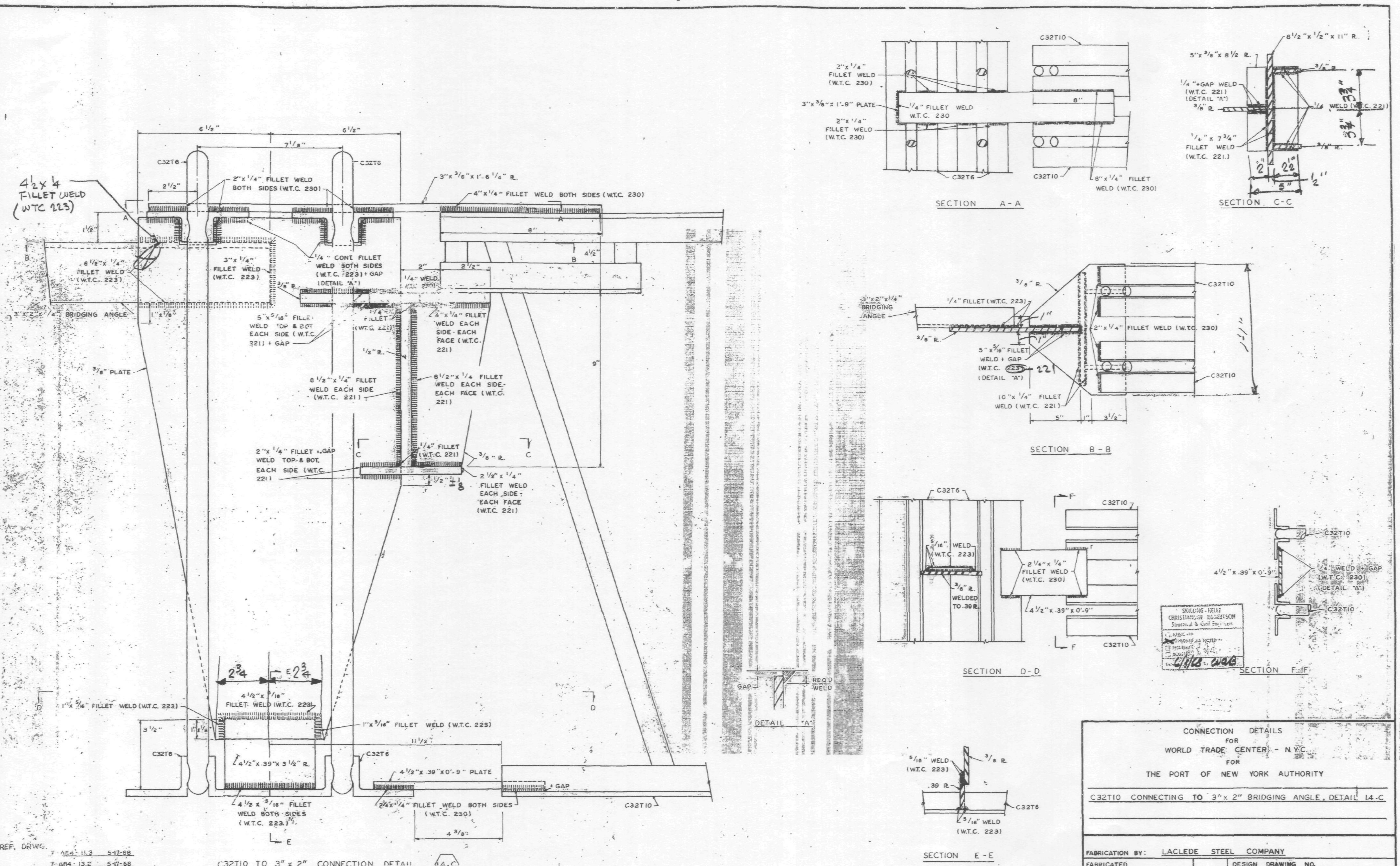

REF. DRWG.

7-AB4-11.3	5-17-68
7-AB4-13.2	5-17-68
7-AB1-8	4-1-68
7-AB1-12	4-1-68

NOTE

1. ALL ARC WELDS TO BE MADE WITH LOW HYDROGEN RODS IN THE E-70 SERIES OR EQUAL.
2. ALL PLATE TO BE ASTM A36

NO.	DATE	REVISION	BY
1	5-20-68	WELD CORRECTIONS	L.W.H.

CONNECTION DETAILS
FOR
WORLD TRADE CENTER - N.Y.C.
FOR
THE PORT OF NEW YORK AUTHORITY

C32T10 CONNECTING TO 3" x 2" BRIDGING ANGLE, DETAIL 14-C

FABRICATION BY: LACLEDE STEEL COMPANY

FABRICATED AT MADISON, ILLINOIS

APPROVED FOR FABRICATION BY ______ FOR P.O.N.Y.A. — DATE

APPROVED FOR FABRICATION BY ______ FOR FABRICATOR — DATE

LACLEDE STEEL CO.
DETAILED BY: A.C. WEBER

DESIGN DRAWING NO. 7-AB4-13.1 5-6-68 PLATE

DRAWN BY: L.W.H. DATE MAY 14, 1968

CHECKED BY: T.M. CHURA DATE: MAY 15, 1968

IN CHARGE OF PROD. DEV.

FABRICATION CONT. NO. W.T.C. 221

SHEET NO. CD 207

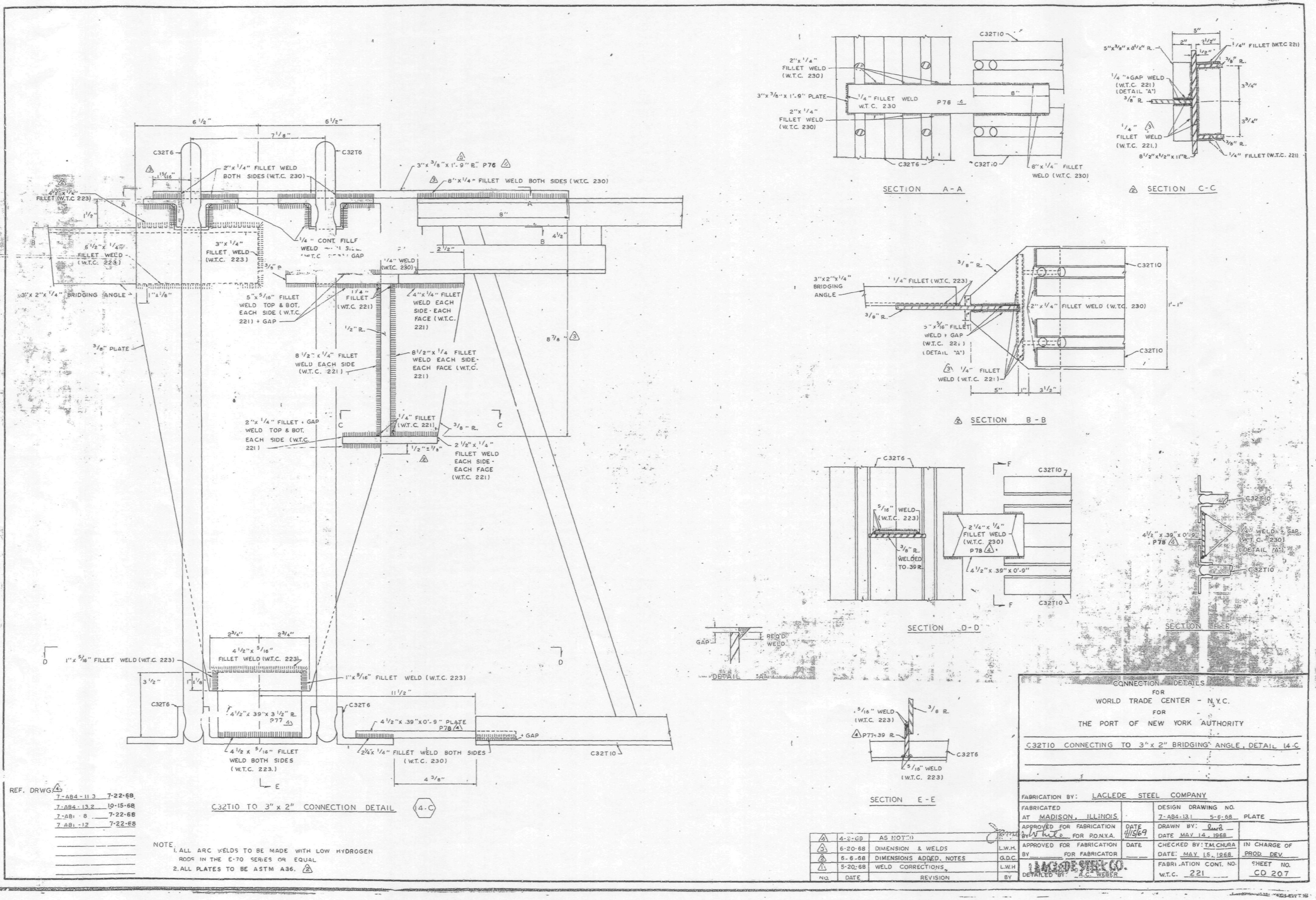

C32T10 TO 3" x 2" CONNECTION DETAIL (14-C)
SECTION A-A
SECTION C-C
SECTION B-B
SECTION D-D
SECTION F-F
SECTION E-E
DETAIL "A"
2" x 1/4" FILLET WELD BOTH SIDES (W.T.C. 230)
3" x 3/8" x 1'-9" PL. P76
8" x 1/4" FILLET WELD BOTH SIDES (W.T.C. 230)
3" x 2" x 1/4" BRIDGING ANGLE
3/8" PLATE
8 1/2" x 1/4" FILLET WELD EACH SIDE (W.T.C. 221)
8 1/2" x 1/4 FILLET WELD EACH SIDE-EACH FACE (W.T.C. 221)
2" x 1/4" FILLET + GAP WELD TOP & BOT. EACH SIDE (W.T.C. 221)
2 1/2" x 1/4" FILLET WELD EACH SIDE-EACH FACE (W.T.C. 221)
5" x 5/16" FILLET WELD TOP & BOT. EACH SIDE (W.T.C. 221) + GAP
4" x 1/4" WELD EACH SIDE-EACH FACE (W.T.C. 221)
1" x 5/16" FILLET WELD (W.T.C. 223)
4 1/2" x 5/16" FILLET WELD (W.T.C. 223)
4 1/2" x .39" x 3 1/2" R. P77
4 1/2" x .39" x 0'-9" PLATE P78
4 1/2 x 5/16" FILLET WELD BOTH SIDES (W.T.C. 223.)
2 1/2" x 1/4" FILLET WELD BOTH SIDES (W.T.C. 230)
C32T6
C32T10
REF. DRWG.
7-A84-11.3 7-22-68
7-A84-13.2 10-15-68
7-A81-8 7-22-68
7-A81-12 7-22-68
NOTE
1. ALL ARC WELDS TO BE MADE WITH LOW HYDROGEN RODS IN THE E-70 SERIES OR EQUAL
2. ALL PLATES TO BE ASTM A36.
4 | 4-2-69 | AS NOTED
3 | 6-20-68 | DIMENSION & WELDS | L.W.H.
2 | 6-6-68 | DIMENSIONS ADDED, NOTES | G.D.C.
1 | 5-20-68 | WELD CORRECTIONS | L.W.H.
NO. | DATE | REVISION | BY
CONNECTION DETAILS
FOR
WORLD TRADE CENTER - N.Y.C.
FOR
THE PORT OF NEW YORK AUTHORITY
C32T10 CONNECTING TO 3" x 2" BRIDGING ANGLE, DETAIL 14-C
FABRICATION BY: LACLEDE STEEL COMPANY
FABRICATED AT MADISON, ILLINOIS
DESIGN DRAWING NO. 7-A84-13.1 5-6-68 PLATE
APPROVED FOR FABRICATION BY FOR P.O.N.Y.A. DATE 4/15/69
DRAWN BY: DATE MAY 14, 1968
APPROVED FOR FABRICATION BY FOR FABRICATOR DATE
CHECKED BY: T.M.CHURA DATE: MAY 15, 1968
IN CHARGE OF PROD. DEV.
LACLEDE STEEL CO.
DETAILED BY: A.C. WEBER
FABRICATION CONT. NO. W.T.C. 221
SHEET NO. CD 207

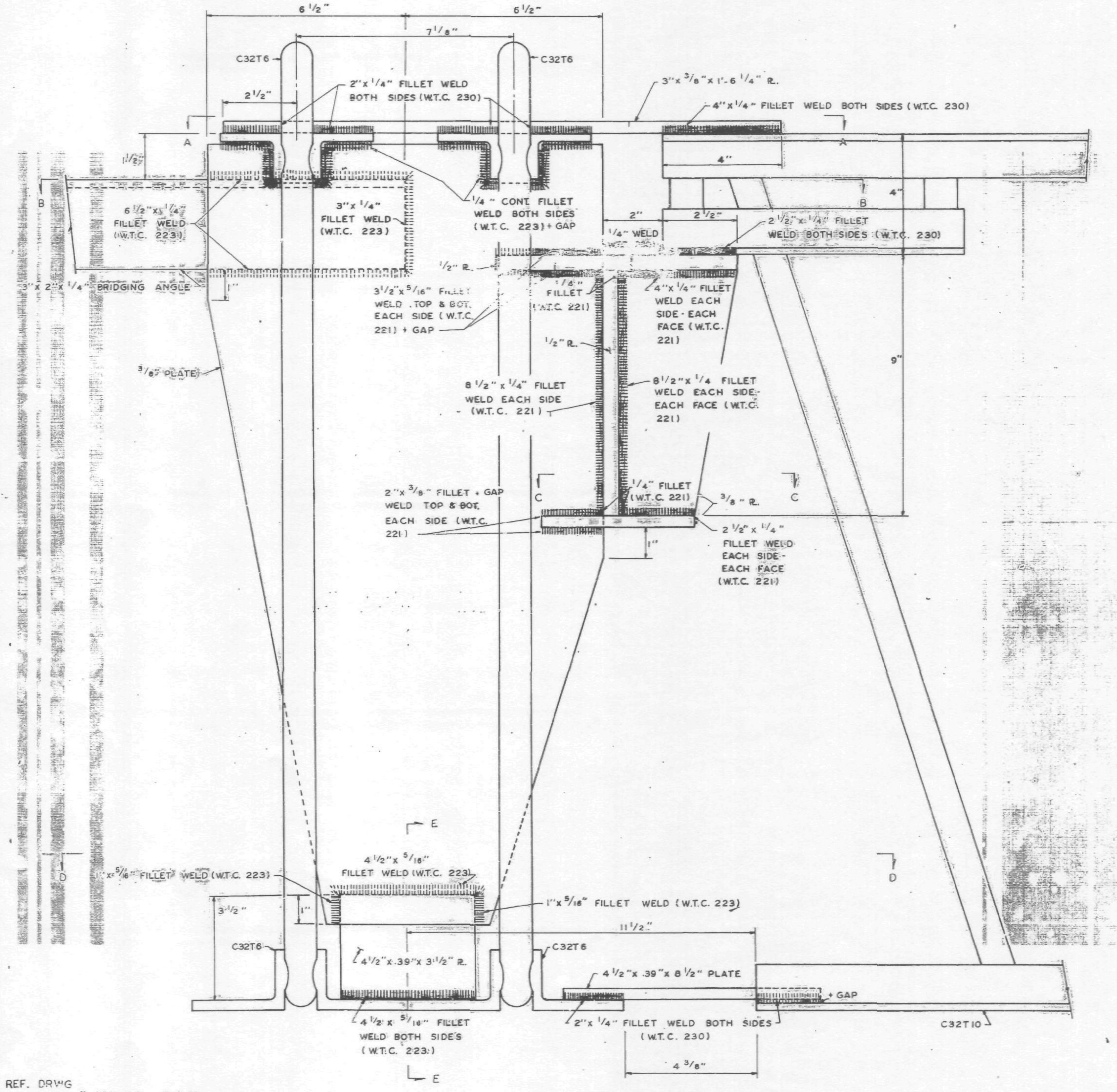

C32T10 TO 3" x 2" CONNECTION DETAIL (14-C)

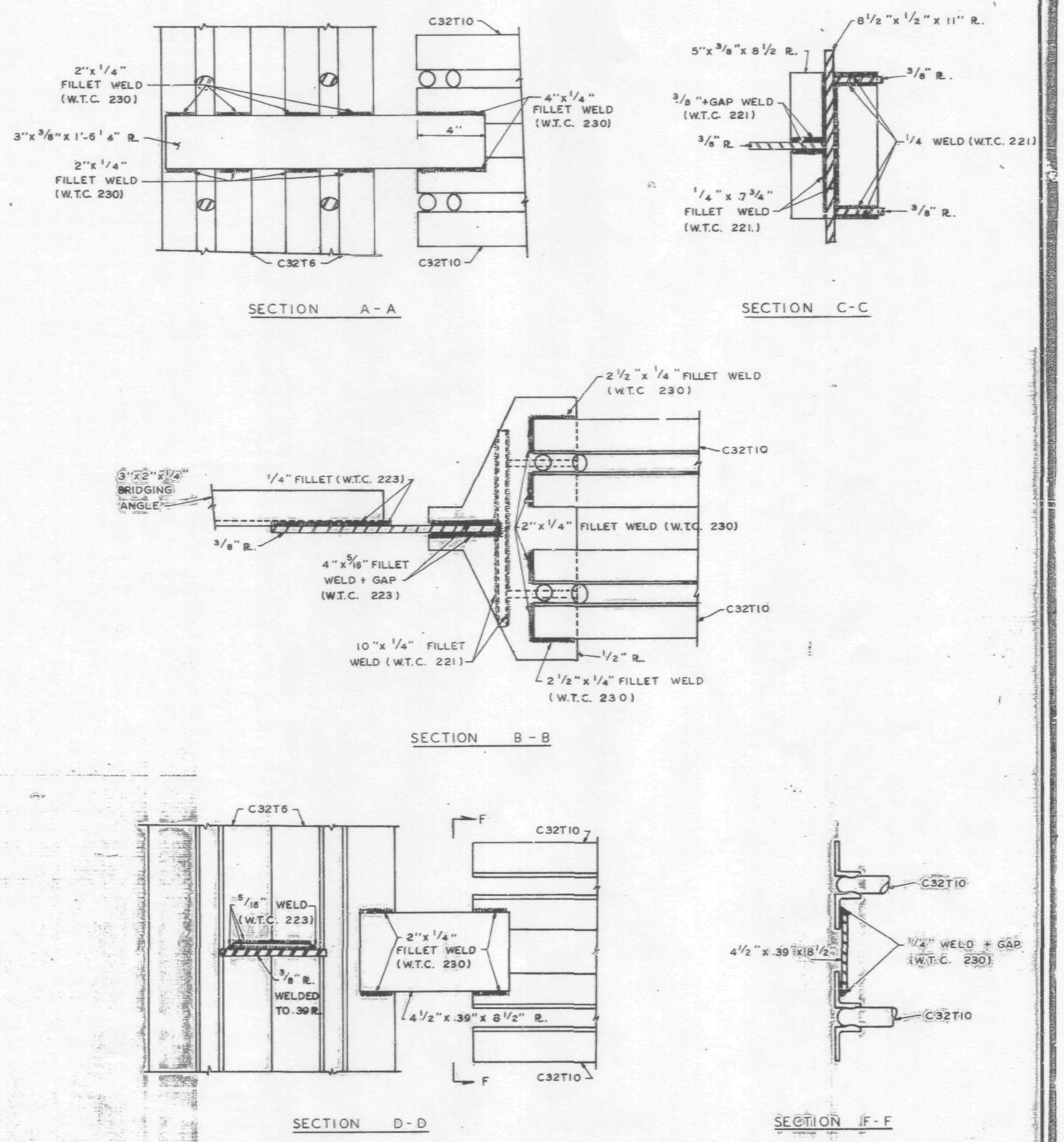

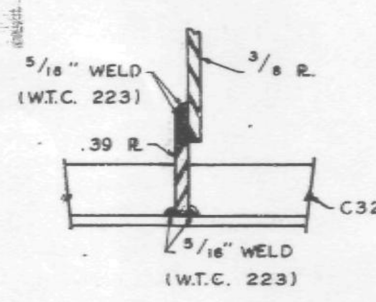

SECTION E-E

VOID

5/17/68

CONNECTION DETAILS
FOR
WORLD TRADE CENTER - N.Y.C.
FOR
THE PORT OF NEW YORK AUTHORITY

C32T10 CONNECTING TO 3" x 2" BRIDGING ANGLE, DETAIL 14-C

FABRICATION BY: LACLEDE STEEL COMPANY			
FABRICATED AT MADISON, ILLINOIS		DESIGN DRAWING NO. 7-AB4-13.1 5-6-68	PLATE
APPROVED FOR FABRICATION BY ____ FOR P.O.N.Y.A.	DATE	DRAWN BY: [illegible] DATE MAY 14, 1968	
APPROVED FOR FABRICATION BY ____ FOR FABRICATOR	DATE	CHECKED BY: T.M. CHURA DATE: MAY 15, 1968	IN CHARGE OF PROD. DEV.
DETAILED BY: A.C. WEBER		FABRICATION CONT. NO. W.T.C. 221	SHEET NO. CD 207

REF. DRWG.

7-AB4-11.3	5-6-68
7-AB4-13.2	5-6-68
7-AB1-8	4-1-68
7-AB1-12	4-1-68

NOTE:
ALL ARC WELDS TO BE MADE WITH LOW HYDROGEN RODS IN THE E-70 SERIES OR EQUAL.

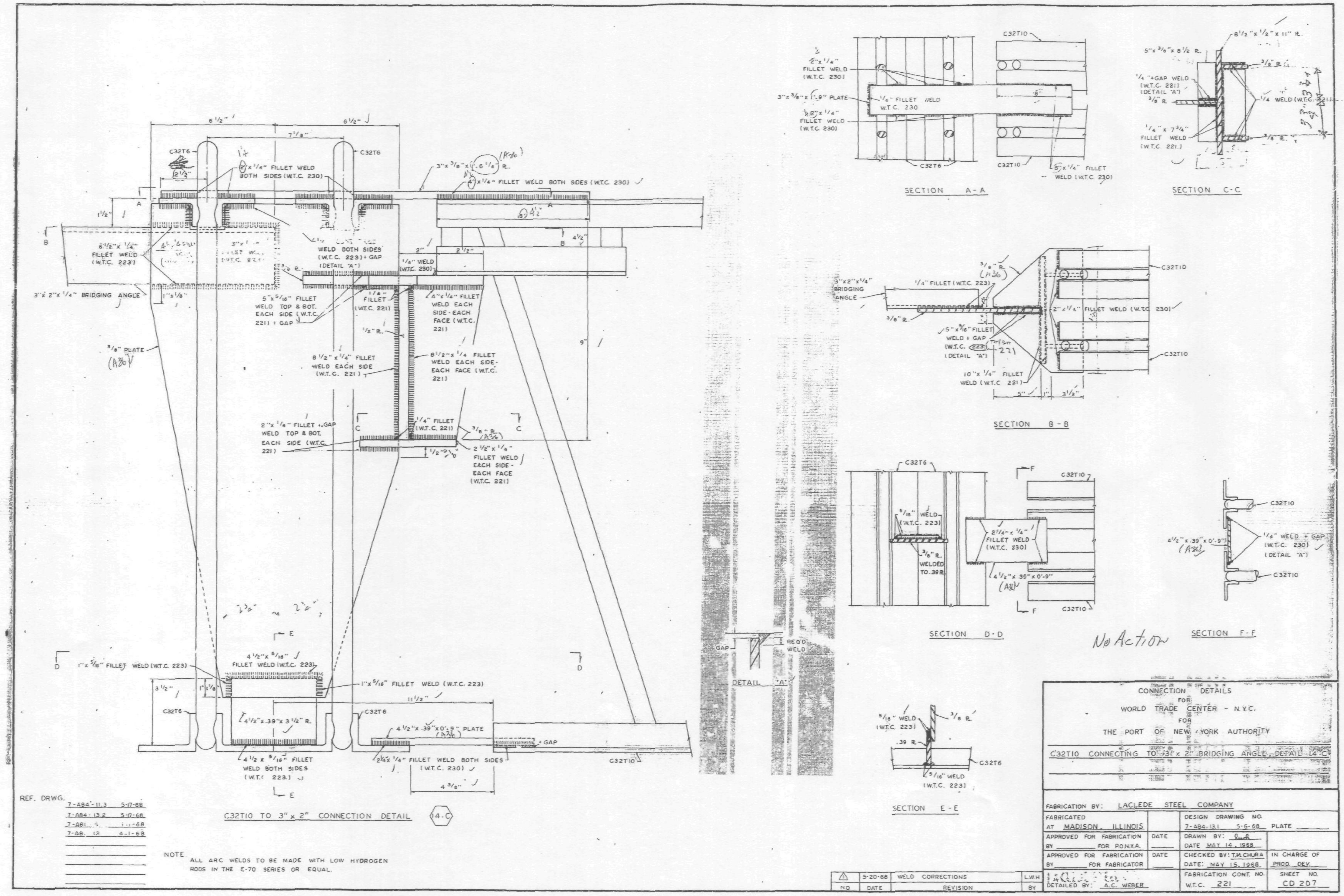
SECTION A-A
SECTION C-C
SECTION B-B
SECTION D-D
SECTION F-F
SECTION E-E
DETAIL "A"
No Action
C32T10 TO 3" x 2" CONNECTION DETAIL 14-C
REF. DRWG.
7-A84-11.3 5-17-68
7-A84-13.2 5-17-68
7-A81 [illegible] [illegible]-68
7-A8[illegible] 12 4-1-68
NOTE
ALL ARC WELDS TO BE MADE WITH LOW HYDROGEN RODS IN THE E-70 SERIES OR EQUAL.
CONNECTION DETAILS
FOR
WORLD TRADE CENTER - N.Y.C.
FOR
THE PORT OF NEW YORK AUTHORITY
C32T10 CONNECTING TO 3" x 2" BRIDGING ANGLE, DETAIL 14-C
FABRICATION BY: LACLEDE STEEL COMPANY
FABRICATED AT MADISON, ILLINOIS
DESIGN DRAWING NO. 7-A84-13.1 5-6-68 PLATE
APPROVED FOR FABRICATION BY FOR P.O.N.Y.A. DATE
DRAWN BY:
DATE MAY 14, 1968
APPROVED FOR FABRICATION BY FOR FABRICATOR DATE
CHECKED BY: T.M. CHURA
DATE: MAY 15, 1968
IN CHARGE OF PROD. DEV.
1 5-20-68 WELD CORRECTIONS L.W.H.
NO. DATE REVISION BY
DETAILED BY: A.C. WEBER
FABRICATION CONT. NO. W.T.C. 221
SHEET NO. CD 207

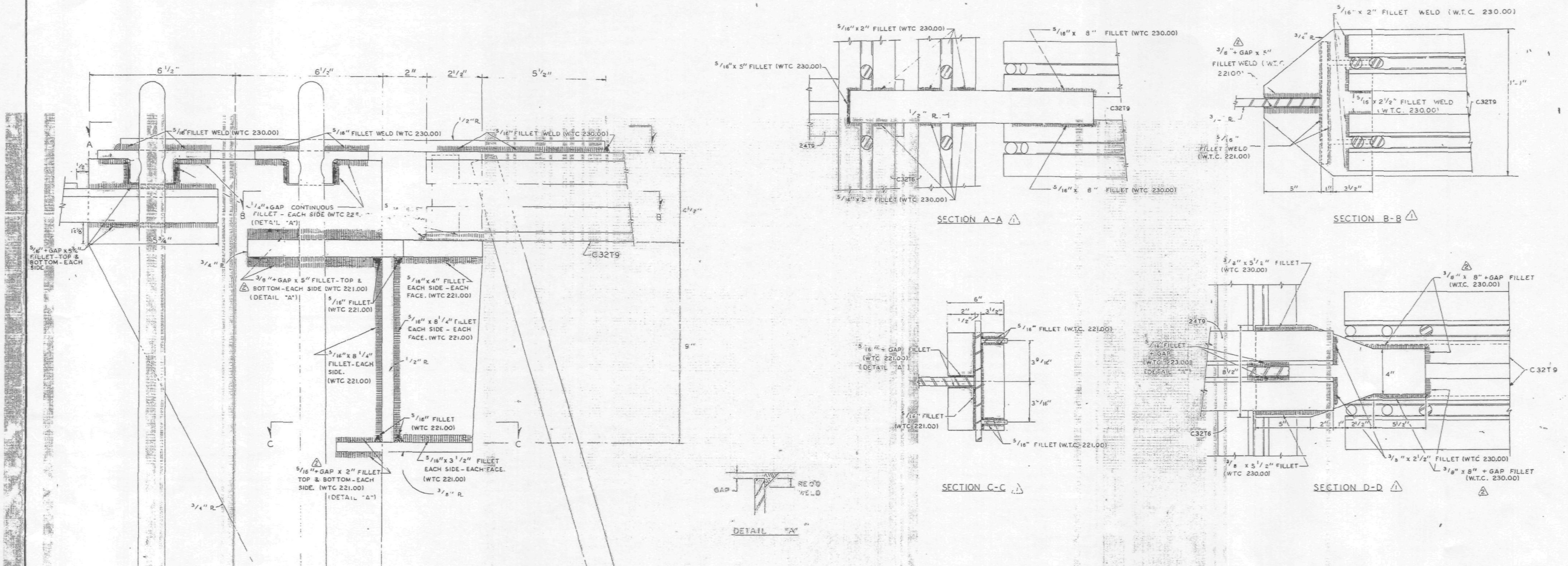

ALL ARC WELDS TO BE MADE WITH LOW HYDROGEN RODS IN THE E-70 SERIES OR EQUAL.
ALL PLATES TO BE GRADE A36 STEEL.

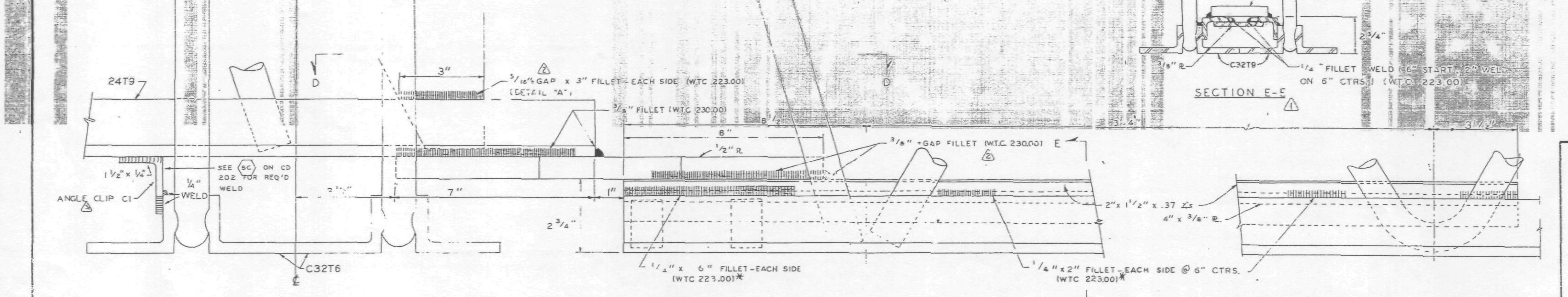

* WELDS TYPICAL TO THOSE MADE BETWEEN 3/8" PLATE AND 2" x 1 1/2" ANGLES. (SEE SECTION E-E)

C32T9 TO 24T9 CONNECTION DETAIL (16-C) △1

REF. DWGS. △1

7-AB4-11	5-6-68
7-AB4-11.1	5-6-68
7-AB1-7	5-10-68
7-AB1-12	5-10-68
7-AB2-4	4-1-68

NO	DATE	REVISION	BY
△3	7-10-68	ANGLE CLIP C1	T.M.C.
△2	6-27-68	AS NOTED	T.M.C.
△1	6-20-68	GENERAL	L.W.H.

CONNECTION DETAILS
FOR
WORLD TRADE CENTER - NYC
FOR
THE PORT OF NEW YORK AUTHORITY

CONNECTION BETWEEN C32T9 AND 24T9 16-C

FABRICATION BY LACLEDE STEEL COMPANY
FABRICATED AT MADISON, ILLINOIS
DESIGN DRAWING NO. 7-AB4-11 PLATE
APPROVED FOR FABRICATION FOR PONYA BY JW DATE 7/12/68
DRAWN BY gdc DATE MAY 14, 1968
APPROVED FOR FABRICATION FOR FABRICATOR BY DATE
CHECKED BY T.M. CHURA DATE MAY 15, 1968
IN CHARGE OF PROD. DEV.
DETAILED BY A.C. WEBER
FABRICATION CONT NO WTC 221
SHEET NO. CD 208

7-11

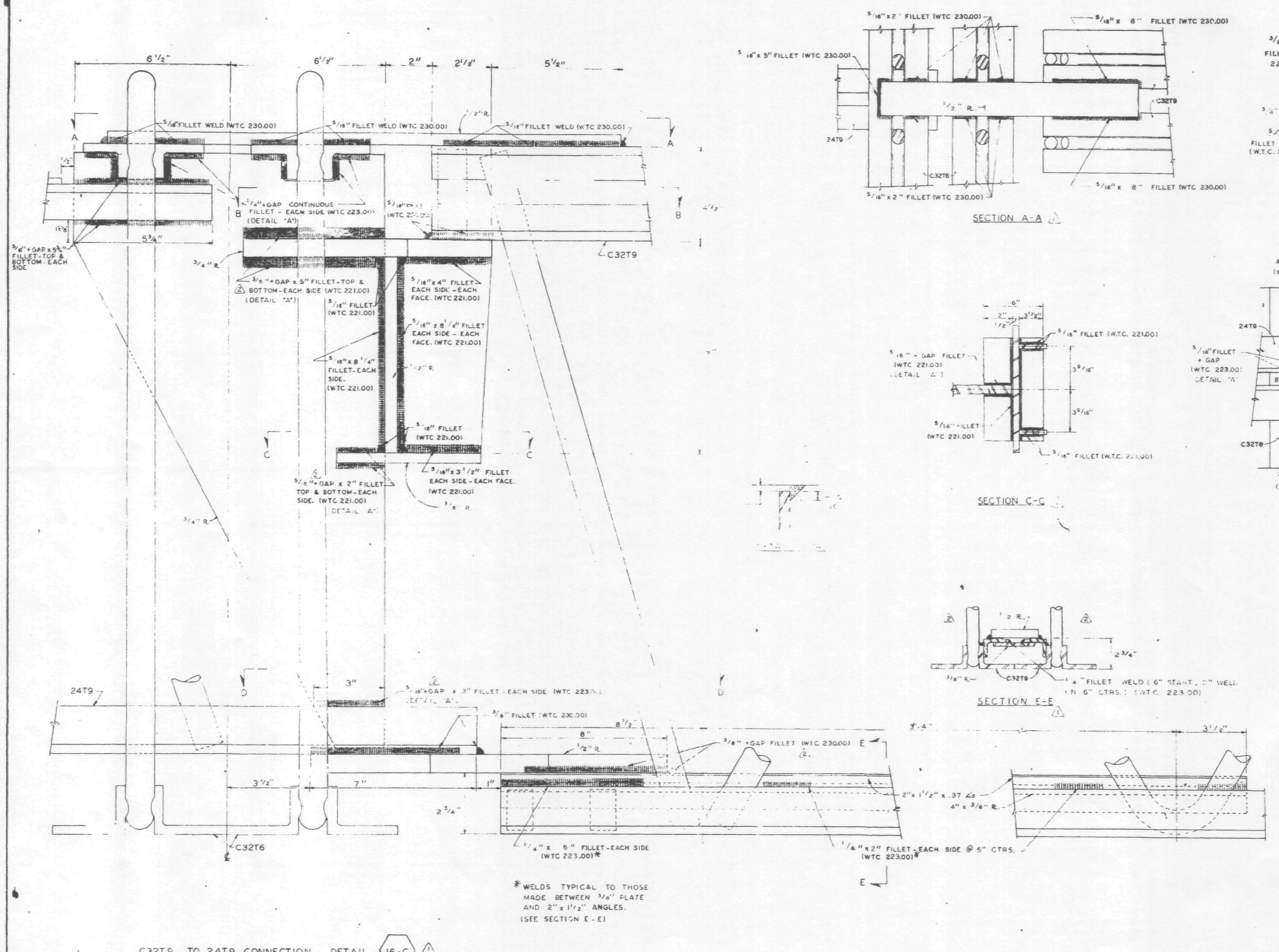

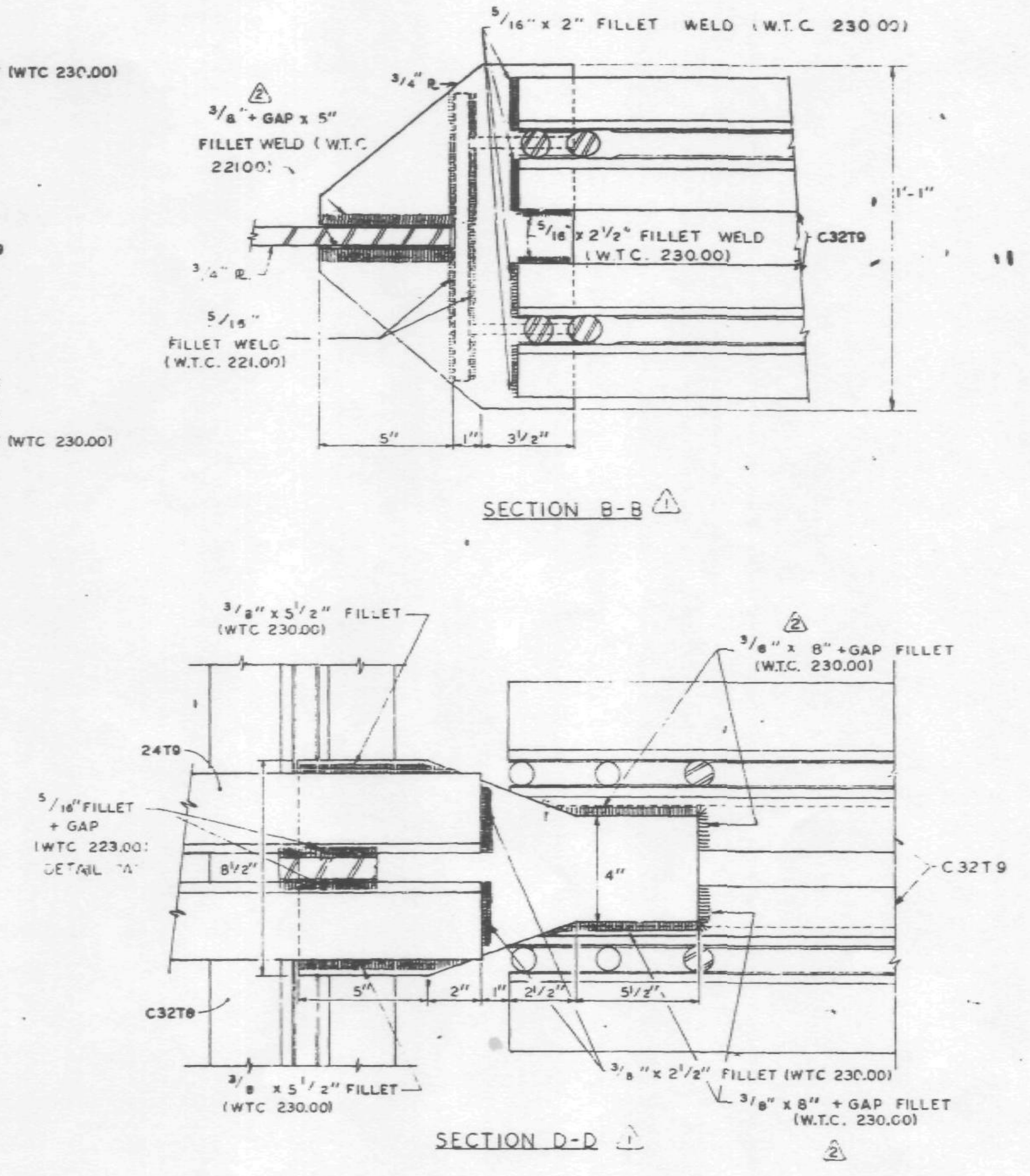

ALL ARC WELDS TO BE MADE WITH LOW HYDROGEN RODS IN THE E-70 SERIES OR EQUAL.
ALL PLATES TO BE GRADE A36 STEEL.

REF. DWGS.

7-AB4-11	5-6-68
7-AB4-11.1	5-6-68
7-AB1-7	5-10-68
7-AB1-12	5-10-68
7-AB2-4	4-1-68

* WELDS TYPICAL TO THOSE MADE BETWEEN 3/8" PLATE AND 2" x 1 1/2" ANGLES. (SEE SECTION E-E)

C32T9 TO 24T9 CONNECTION DETAIL (16-C)

CONNECTION DETAILS
FOR
WORLD TRADE CENTER - NYC
FOR
THE PORT OF NEW YORK AUTHORITY

CONNECTION BETWEEN C32T9 AND 24T9 16-C

FABRICATION BY LACLEDE STEEL COMPANY

FABRICATED AT MADISON, ILLINOIS		DESIGN DRAWING NO. 7-AB4-11	PLATE
APPROVED FOR FABRICATION BY JW FOR P.O.N.Y.A.	DATE 7/5/68	DRAWN BY gdc DATE MAY 14, 1968	
APPROVED FOR FABRICATION BY FOR FABRICATOR	DATE	CHECKED BY T.M.CHURA DATE MAY 15, 1968	IN CHARGE OF PROD. DEV.
DETAILED BY A.C. WEBER		FABRICATION CONT. NO. W.T.C. 221	SHEET NO. CD 208

NO.	DATE	REVISION	BY
2	6-27-68	AS NOTED	T.M.C.
1	6-20-68	GENERAL	L.W.H.

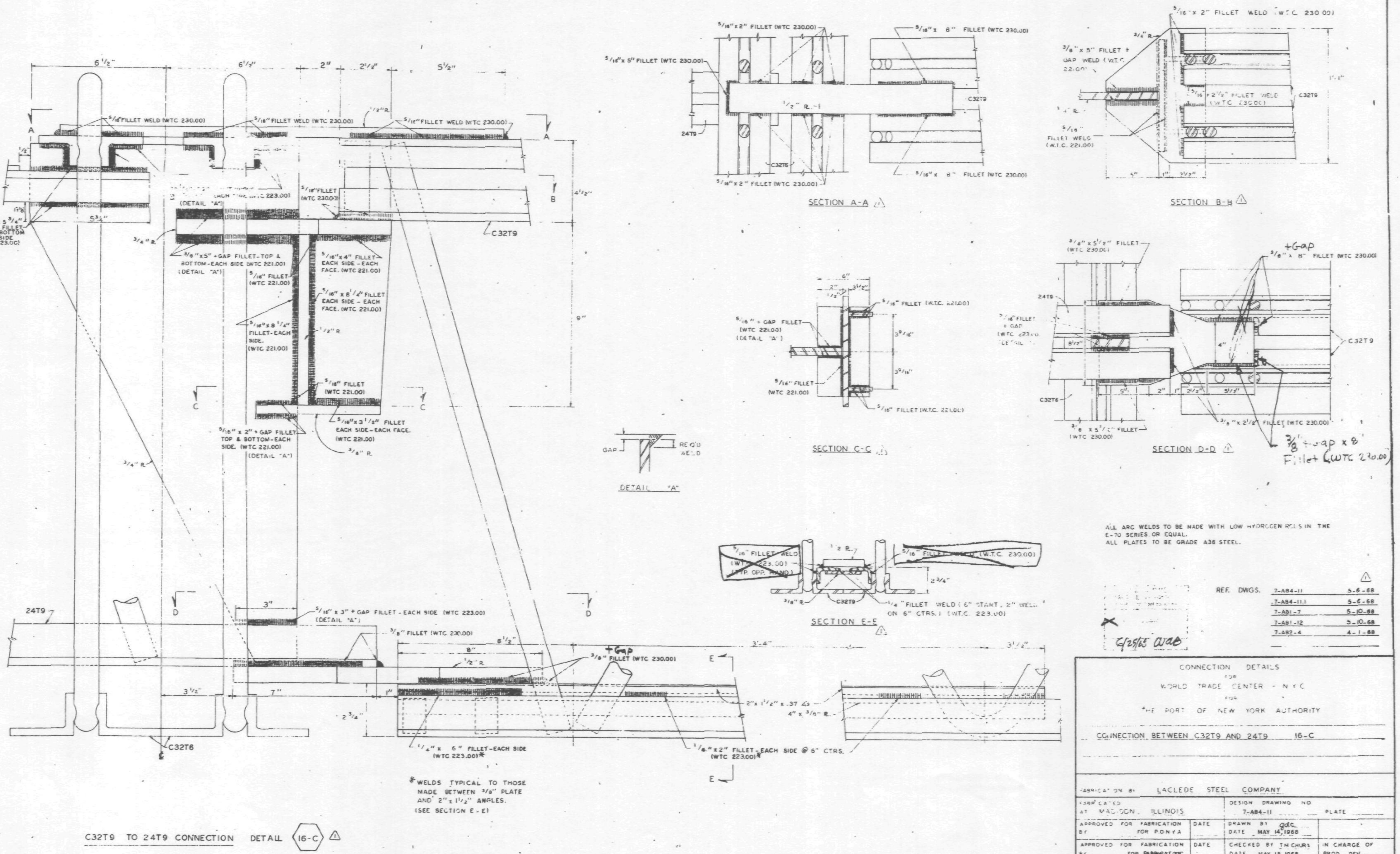

ALL ARC WELDS TO BE MADE WITH LOW HYDROGEN RODS IN THE E-70 SERIES OR EQUAL.
ALL PLATES TO BE GRADE A36 STEEL.

REF. DWGS.	
7-AB4-11	5-6-68
7-AB4-11.1	5-6-68
7-AB1-7	5-10-68
7-AB1-12	5-10-68
7-AB2-4	4-1-68

6/25/65 WAB

No.	Date	Revision	By
1	6-20-68	GENERAL	LWH

CONNECTION DETAILS
FOR
WORLD TRADE CENTER - N.Y.C.
FOR
THE PORT OF NEW YORK AUTHORITY

CONNECTION BETWEEN C32T9 AND 24T9 16-C

FABRICATION BY LACLEDE STEEL COMPANY

FABRICATED AT MADISON, ILLINOIS		DESIGN DRAWING NO. 7-AB4-11	PLATE
APPROVED FOR FABRICATION BY FOR P.O.N.Y.A.	DATE	DRAWN BY gdc DATE MAY 14, 1968	
APPROVED FOR FABRICATION BY FOR FABRICATOR	DATE	CHECKED BY T.M. CHURA DATE MAY 15, 1968	IN CHARGE OF PROD. DEV.
DETAILED BY A.C. WEBER — LACLEDE STEEL CO.		FABRICATION CONT. NO. W.T.C. 221	SHEET NO. CD 208

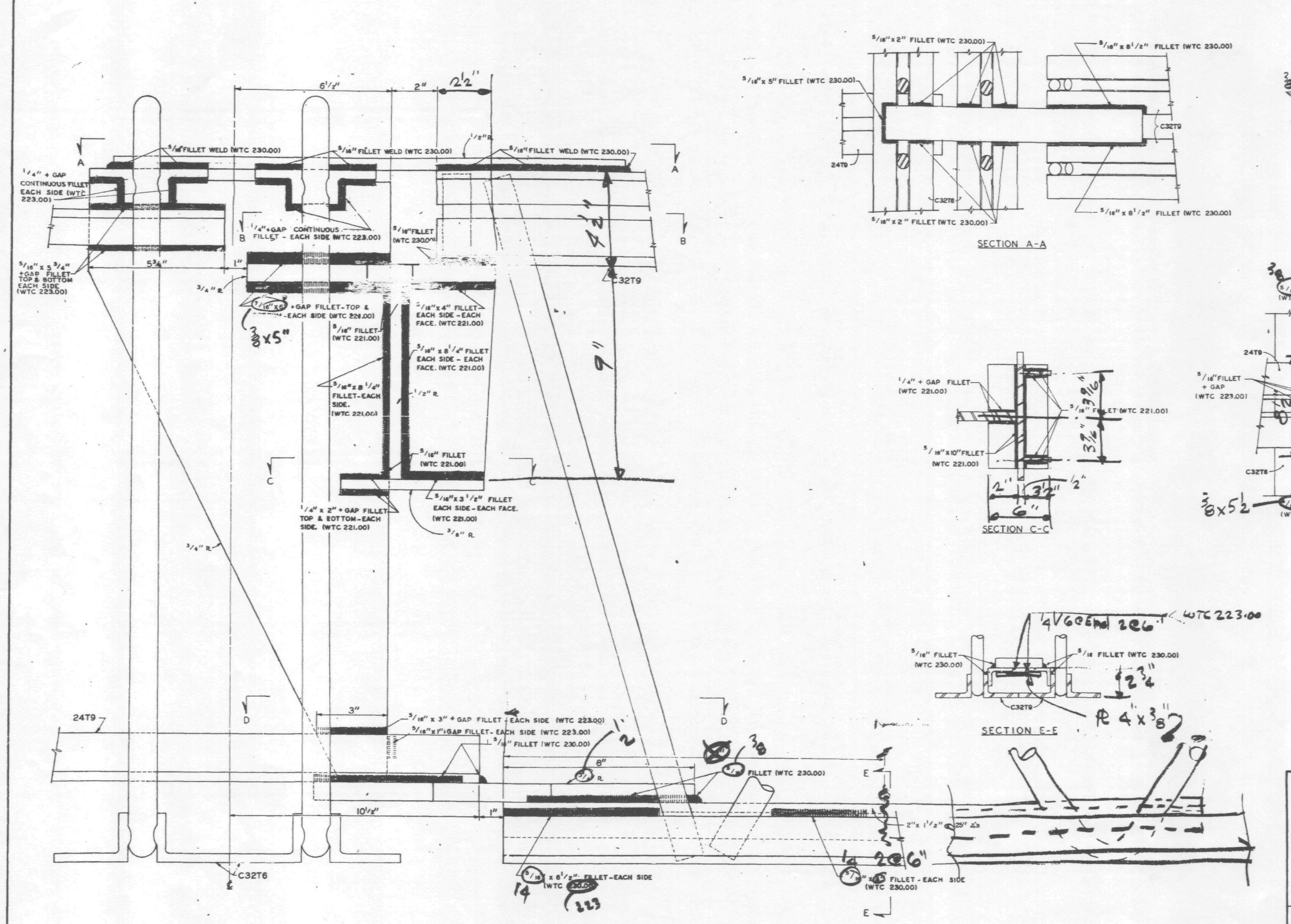

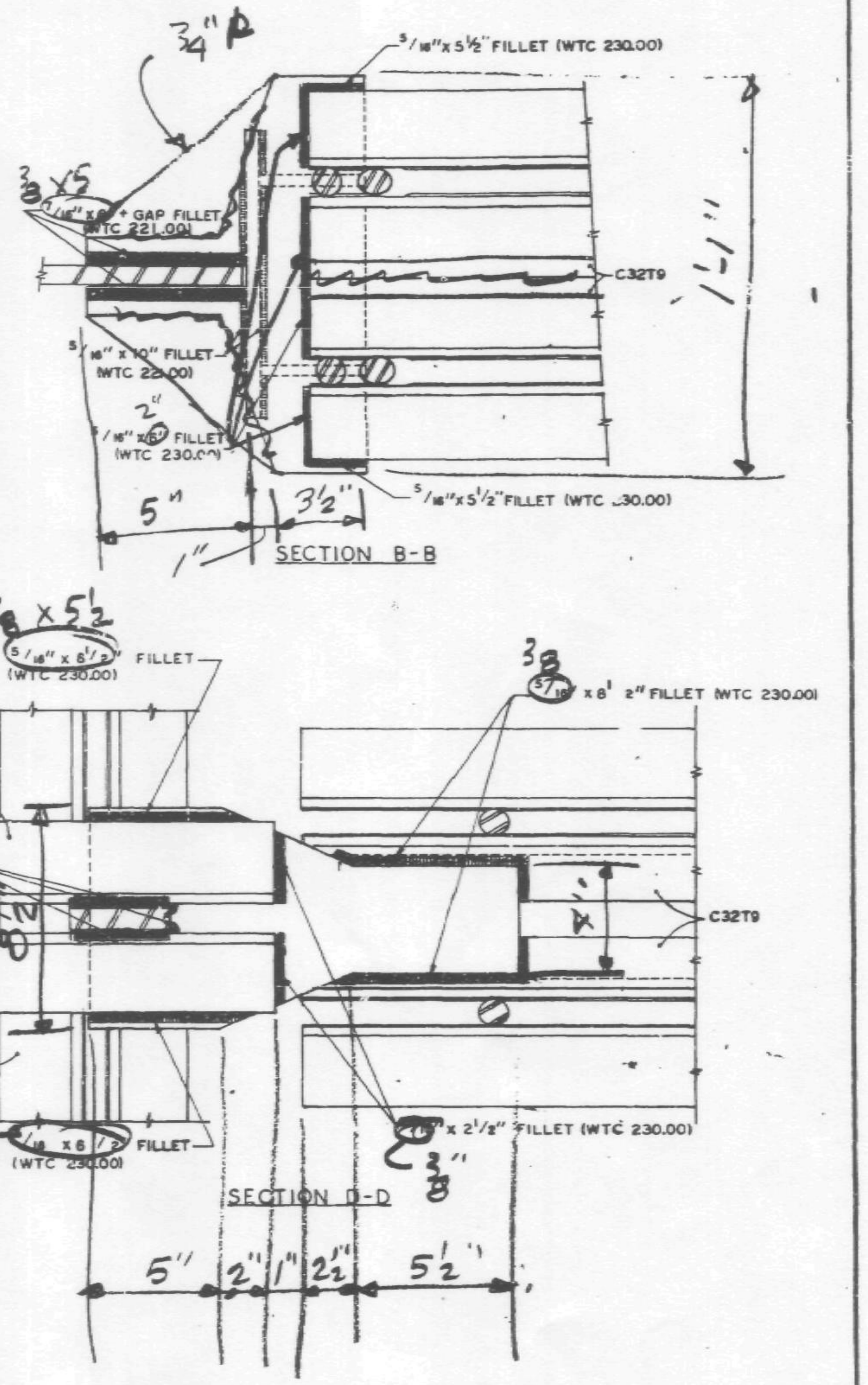

ALL ARC WELDS TO BE MADE WITH LOW HYDOGEN RODS IN THE E-70 SERIES OR EQUAL.

SKILLING - HELLE CHRISTIANSEN - ROBERTSON Structural & Civil Engineers

6/3/68 WAB

REF. DWGS.

7-AB4-11	5-6-68
7-AB4-11.1	5-6-68
7-AB1-7	4-15-68
7-AB1-12	4-1-68
7-AB2-4	4-1-68

CONNECTION DETAILS
FOR
WORLD TRADE CENTER - N.Y.C.
FOR
THE PORT OF NEW YORK AUTHORITY

CONNECTION BETWEEN C32T9 AND 24T9 16-C

FABRICATION BY LACLEDE STEEL COMPANY			
FABRICATED AT MADISON, ILLINOIS		DESIGN DRAWING NO. 7-AB4-11	PLATE
APPROVED FOR FABRICATION BY FOR P.O.N.Y.A	DATE	DRAWN BY: gdc DATE MAY 14, 1968	
APPROVED FOR FABRICATION BY FOR FABRICATOR	DATE	CHECKED BY T.M. CHURA DATE MAY 15, 1968	IN CHARGE OF PROD. DEV.
DETAILED BY A C WEBER		FABRICATION CONT. NO. WTC 221	SHEET NO. CD 208

NO.	DATE	REVISION	BY

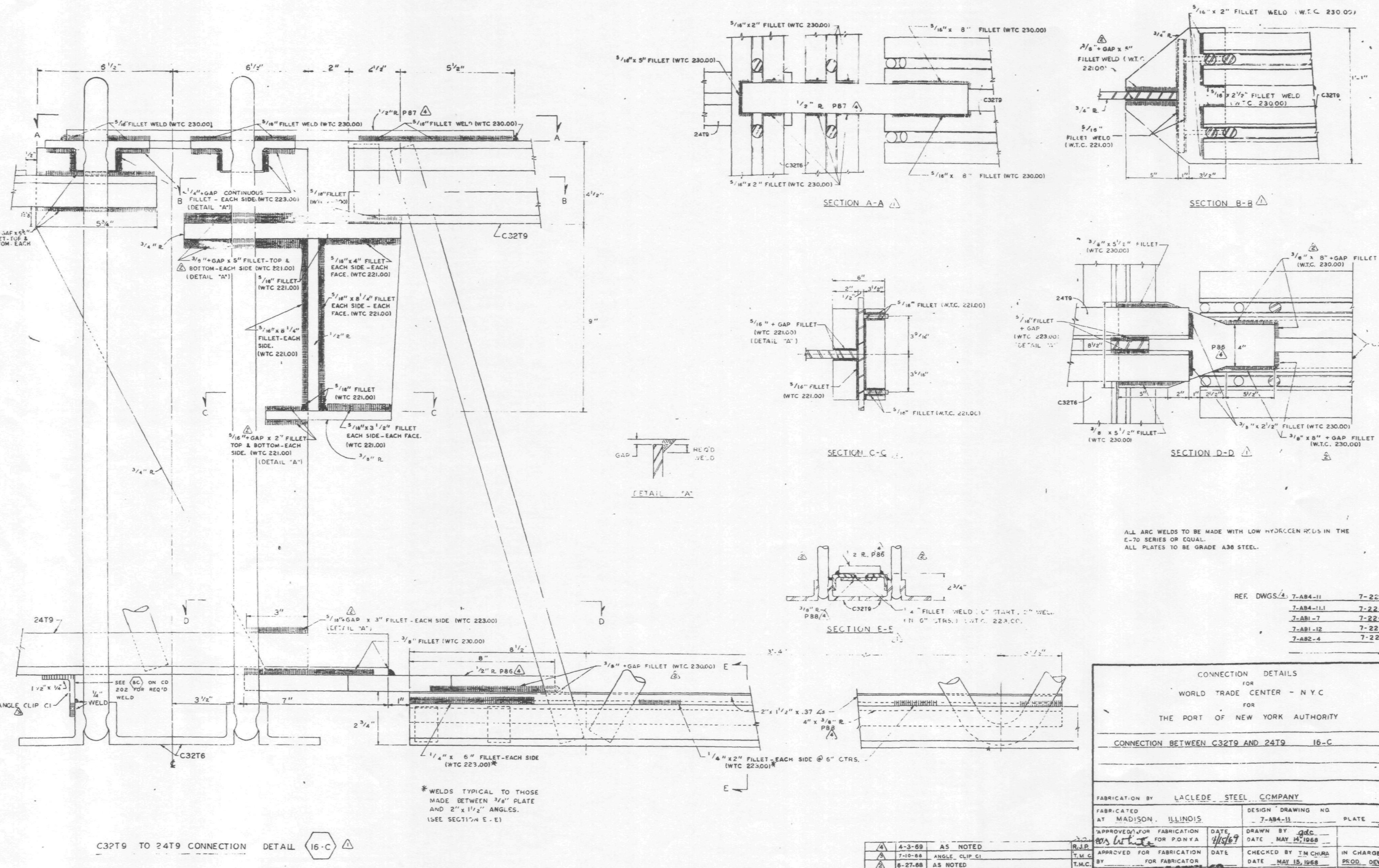

ALL ARC WELDS TO BE MADE WITH LOW HYDROGEN RODS IN THE E-70 SERIES OR EQUAL.
ALL PLATES TO BE GRADE A36 STEEL.

REF. DWGS. (4)

7-AB4-11	7-22-68
7-AB4-11.1	7-22-68
7-AB1-7	7-22-68
7-AB1-12	7-22-68
7-AB2-4	7-22-68

CONNECTION DETAILS
FOR
WORLD TRADE CENTER - N.Y.C
FOR
THE PORT OF NEW YORK AUTHORITY

CONNECTION BETWEEN C32T9 AND 24T9 16-C

FABRICATION BY LACLEDE STEEL COMPANY
FABRICATED AT MADISON, ILLINOIS
DESIGN DRAWING NO. 7-AB4-11 PLATE
APPROVED FOR FABRICATION ~~~ FOR P.O.N.Y.A DATE 4/15/69
DRAWN BY gdc DATE MAY 14, 1968
APPROVED FOR FABRICATION BY FOR FABRICATOR DATE
CHECKED BY T.M. CHURA DATE MAY 15, 1968
IN CHARGE OF PROD. DEV.
DETAILED BY A.C. WEBER
LACLEDE STEEL CO.
FABRICATION CONT. NO. W.T.C. 221
SHEET NO. CD 208

NO	DATE	REVISION	BY
4	4-3-69	AS NOTED	R.J.P.
3	7-10-68	ANGLE CLIP C1	T.M.C.
2	6-27-68	AS NOTED	T.M.C.
1	6-20-68	GENERAL	L.W.H.

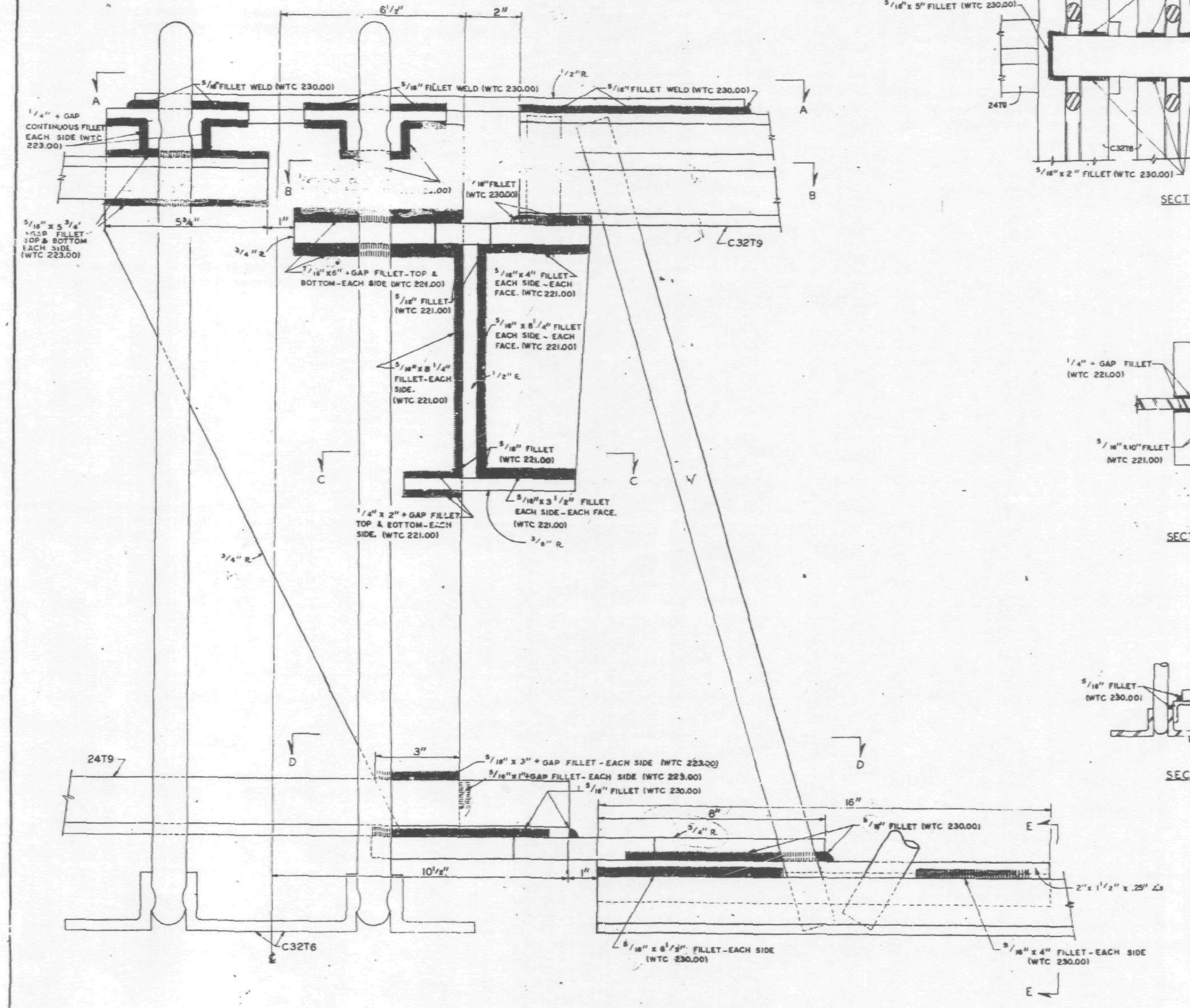

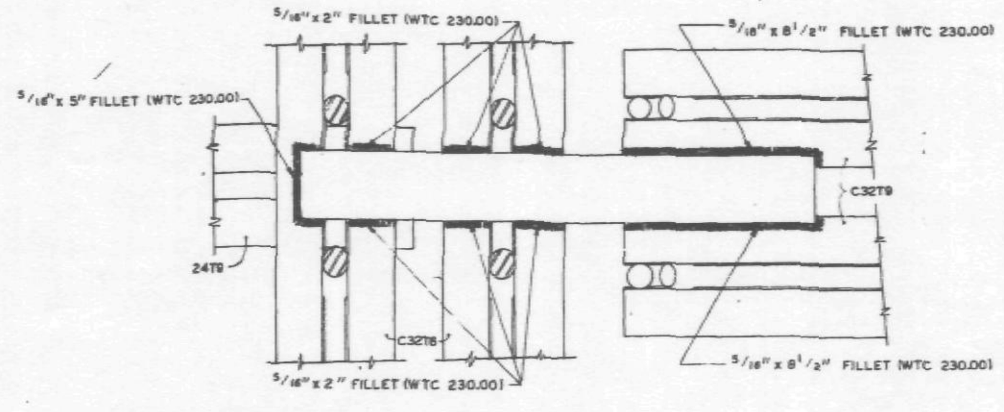

SECTION A-A

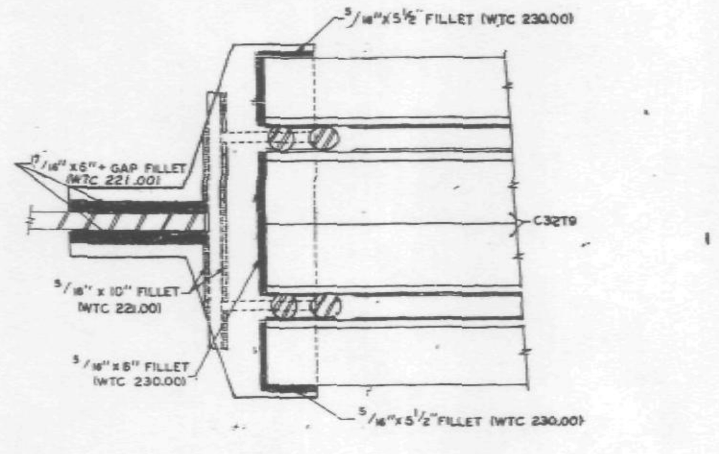

SECTION B-B

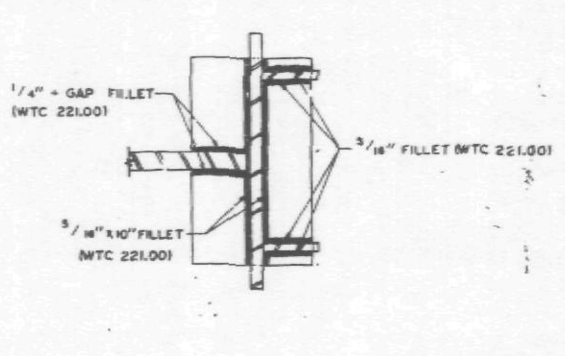

SECTION C-C

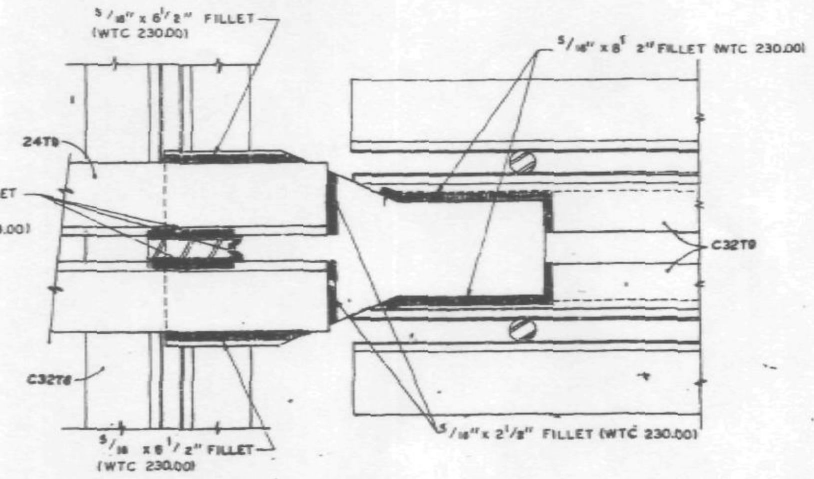

SECTION D-D

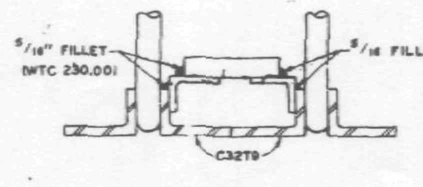

SECTION E-E

ALL ARC WELDS TO BE MADE WITH LOW HYDOGEN RODS IN THE E-70 SERIES OR EQUAL.

No Action.

REF. DWGS.	
7-A34-11	5-6-68
7-AB4-11.1	5-6-68
7-AB1-7	4-15-68
7-AB1-12	4-1-68
7-AB2-4	4-1-68

CONNECTION DETAILS
FOR
WORLD TRADE CENTER - N.Y.C.
FOR
THE PORT OF NEW YORK AUTHORITY

CONNECTION BETWEEN C32T9 AND 24T9 16-C

FABRICATION BY LACLEDE STEEL COMPANY

FABRICATED AT MADISON, ILLINOIS		DESIGN DRAWING NO. 7-AB4-11	PLATE
APPROVED FOR FABRICATION BY ____ FOR P.O.N.Y.A	DATE	DRAWN BY gdc DATE MAY 14, 1968	
APPROVED FOR FABRICATION BY ____ FOR FABRICATOR	DATE	CHECKED BY T.M. CHURA DATE MAY 15, 1968	IN CHARGE OF PROD. DEV.
DETAILED BY A.C. WEBER		FABRICATION CONT. NO. WTC 221	SHEET NO. CD 208

NO.	DATE	REVISION	BY

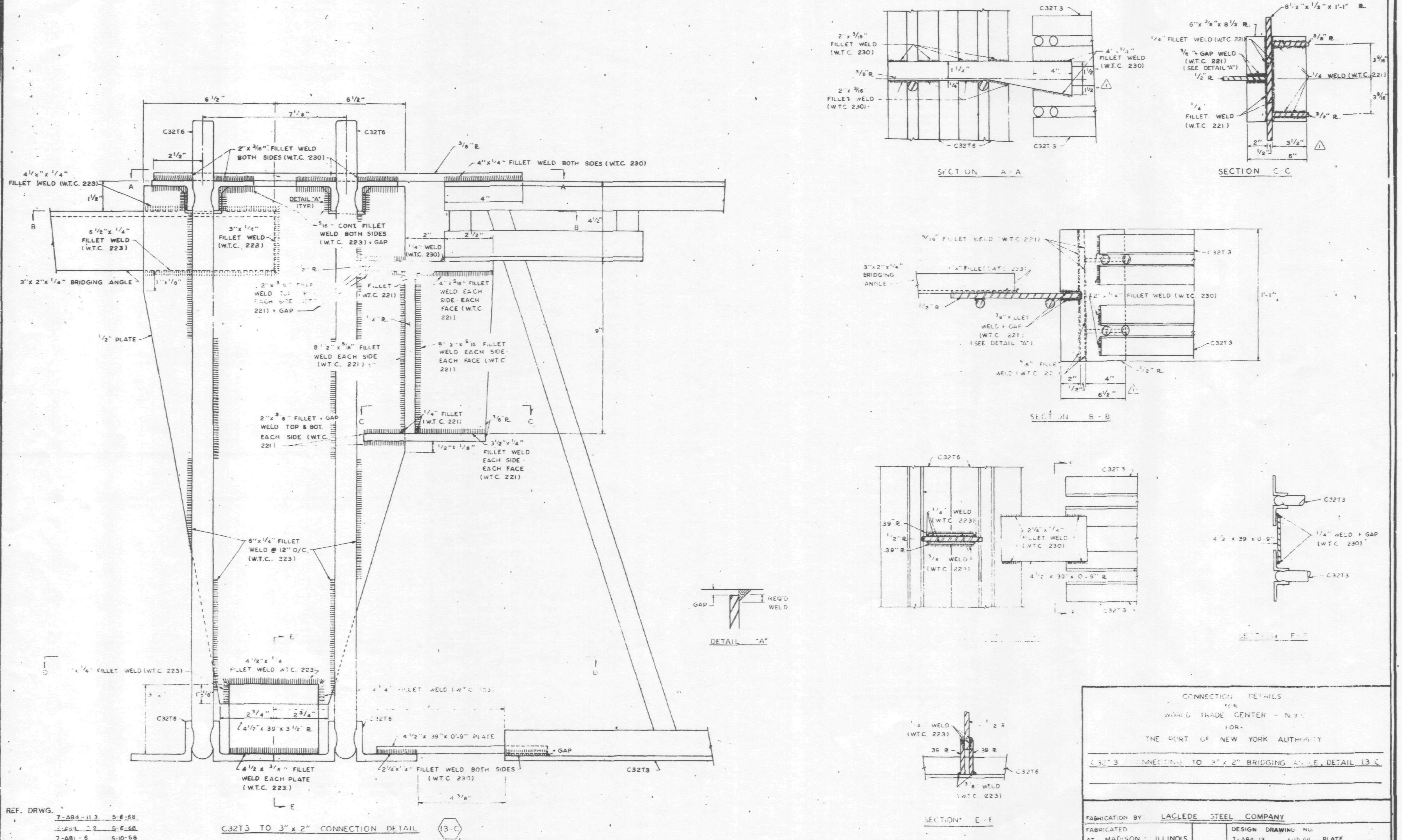

C32T3 TO 3" x 2" CONNECTION DETAIL (13-C)

REF. DRWG.

7-AB4-11.3	5-6-68
[illegible]	5-6-68
7-AB1-6	5-10-68
7-AB1-12	5-10-68

NOTE
1. ALL ARC WELDS TO BE MADE WITH LOW HYDROGEN RODS IN THE E-70 SERIES OR EQUAL.
2. ALL PLATES TO BE ASTM A36. (1)

NO	DATE	REVISION	BY
1	6-20-68	DIMENSIONS ADDED, NOTE TWO	L.W.H.

CONNECTION DETAILS
FOR
WORLD TRADE CENTER - N.Y.C.
FOR
THE PORT OF NEW YORK AUTHORITY

C32T3 CONNECTING TO 3" x 2" BRIDGING ANGLE, DETAIL 13-C

FABRICATION BY: LACLEDE STEEL COMPANY

FABRICATED AT MADISON, ILLINOIS		DESIGN DRAWING NO. 7-AB4-13 5-17-69	PLATE
APPROVED FOR FABRICATION BY JW FOR P.O.N.Y.A.	DATE 6/25/68	DRAWN BY: [illegible] DATE MAY 14, 1968	
APPROVED FOR FABRICATION BY FOR FABRICATOR	DATE	CHECKED BY: T.M.CHURA DATE: MAY [illegible] 1968	IN CHARGE OF PROD. DEV.
LACLEDE STEEL CO. DETAILED BY: A.C. WEBER		FABRICATION CONT. NO. W.T.C. 221	SHEET NO. CD 209

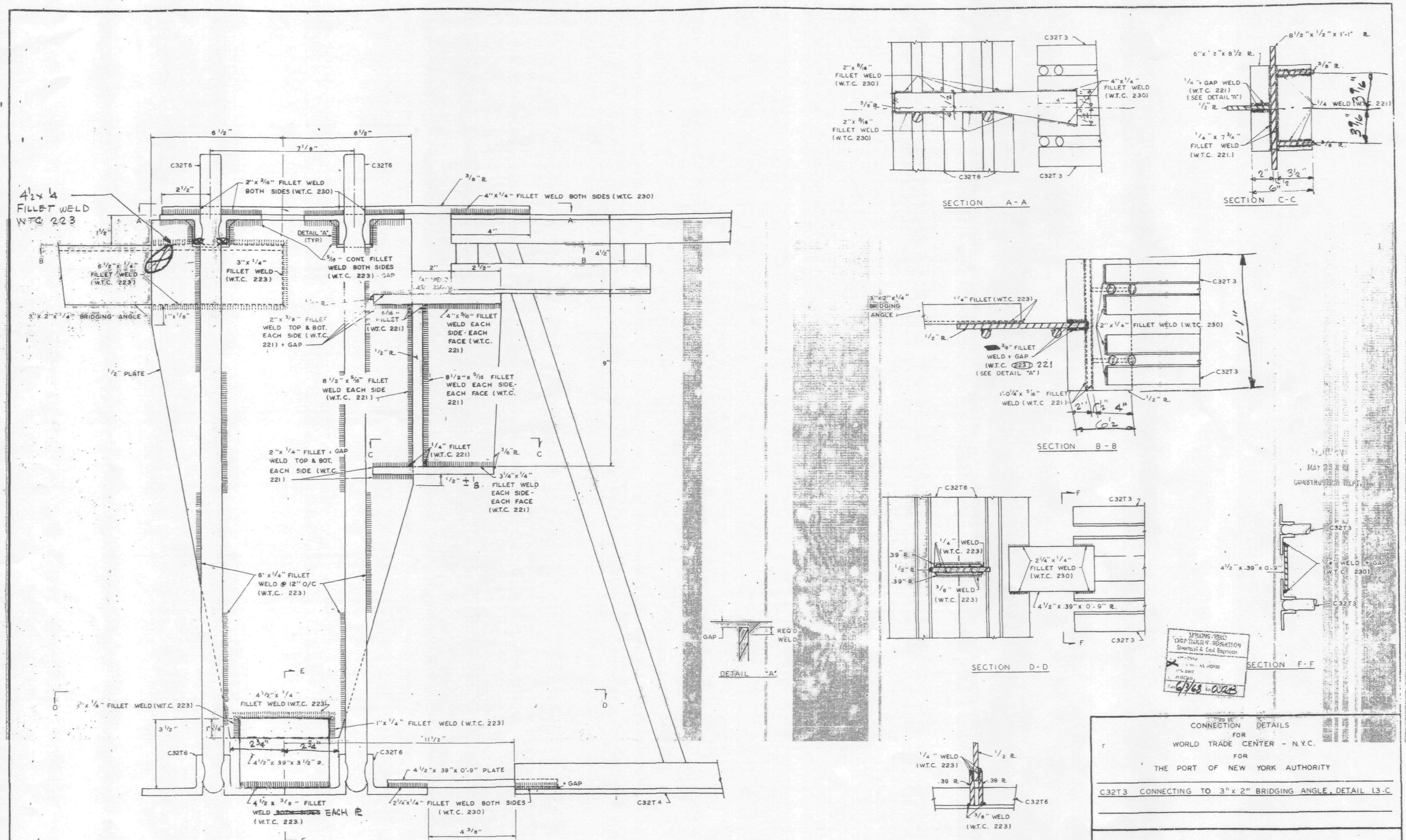

C32T3 TO 3" x 2" CONNECTION DETAIL (13-C)

REF. DRWG.

7-AB4-11.3	5-17-68
7-AB4-13.2	5-17-68
7-AB1-6	4-15-68
7-AB1-12	4-1-68

NOTE
1. ALL ARC WELDS TO BE MADE WITH LOW HYDROGEN RODS IN THE E-70 SERIES OR EQUAL.
2. ALL PLATE TO BE ASTM A36

CONNECTION DETAILS
FOR
WORLD TRADE CENTER - N.Y.C.
FOR
THE PORT OF NEW YORK AUTHORITY

C32T3 CONNECTING TO 3" x 2" BRIDGING ANGLE, DETAIL 13-C

FABRICATION BY: LACLEDE STEEL COMPANY

FABRICATED AT MADISON, ILLINOIS		DESIGN DRAWING NO. 7-AB4-13 5-17-68	PLATE
APPROVED FOR FABRICATION BY ____ FOR P.O.N.Y.A.	DATE	DRAWN BY: [illegible] DATE MAY 14, 1968	
APPROVED FOR FABRICATION BY LACLEDE STEEL CO.	DATE	CHECKED BY: T.M. CHURA DATE: MAY 15, 1968	IN CHARGE OF PROD. DEV.
DETAILED BY: A.C. WEBER		FABRICATION CONT. NO. W.T.C. 221	SHEET NO. CD 209

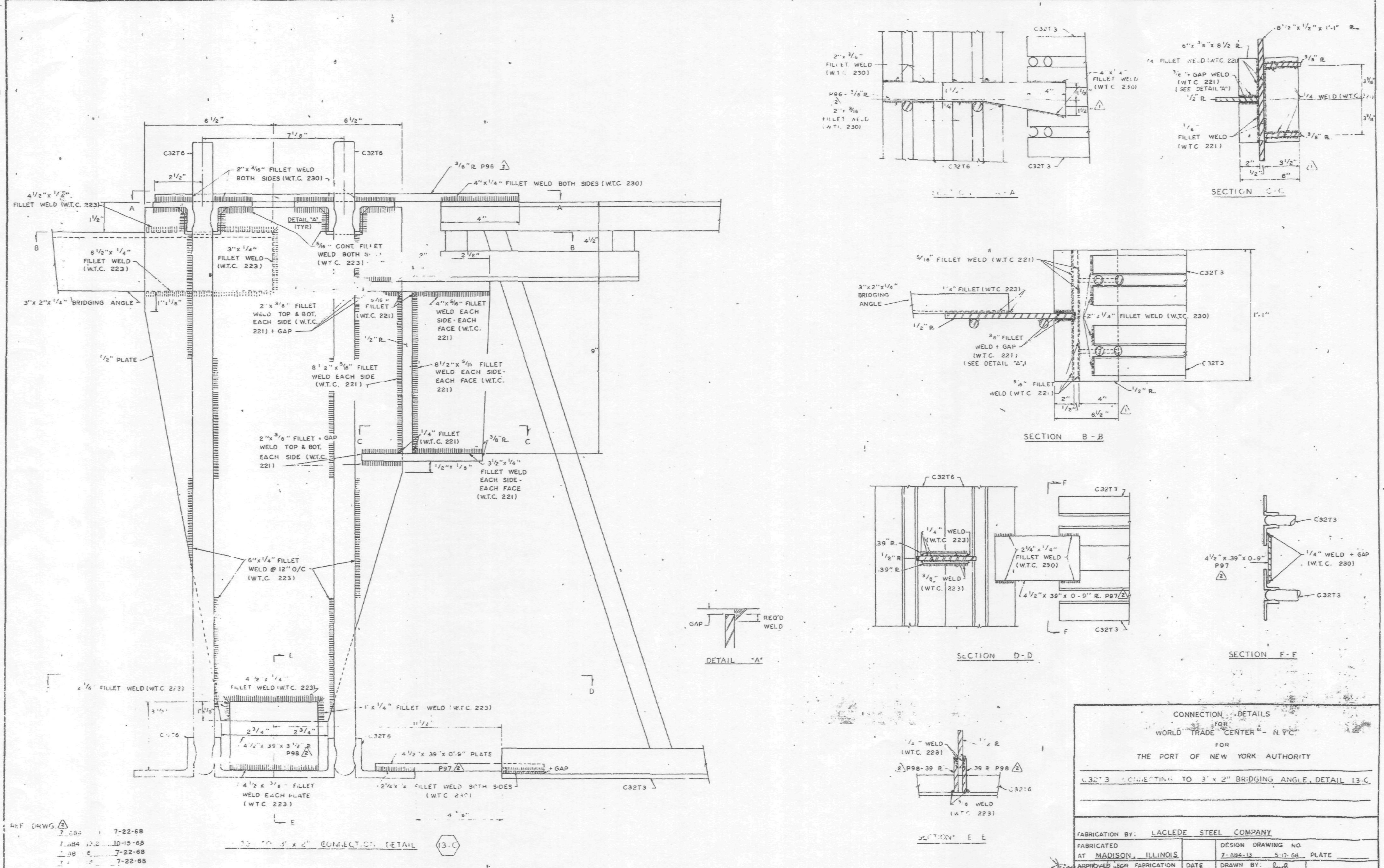

REF DRWG 7-484 7-22-68

7-484 10-15-68

7-22-68

7-22-68

NOTES:

1. ALL ... WELDS TO BE MADE WITH ... FOR ...

2. ALL PLATES TO BE ASTM A36. (1)

CONNECTION DETAILS FOR WORLD TRADE CENTER - N.Y.C. FOR THE PORT OF NEW YORK AUTHORITY

C32T3 CONNECTING TO 3" x 2" BRIDGING ANGLE, DETAIL 13-C

NO	DATE	REVISION	BY
2	4-3-69	AS NOTED	R.J.R.
1	6-20-68	DIMENSIONS ADDED, NOTE TWO	L.W.H.

FABRICATION BY: LACLEDE STEEL COMPANY

FABRICATED AT MADISON, ILLINOIS

APPROVED FOR FABRICATION BY ... FOR PONYA — DATE 4/15/69

APPROVED FOR FABRICATION BY ... FOR FABRICATOR — DATE

LACLEDE STEEL CO.

DETAILED BY A. WEBER

DESIGN DRAWING NO. 7-484-13 5-17-68 PLATE

DRAWN BY: ... DATE MAY 14, 1968

CHECKED BY: T.M. CHURA DATE MAY 15, 1968

IN CHARGE OF: PROD. DEV.

FABRICATION CONT NO WT 221

SHEET NO CD 209

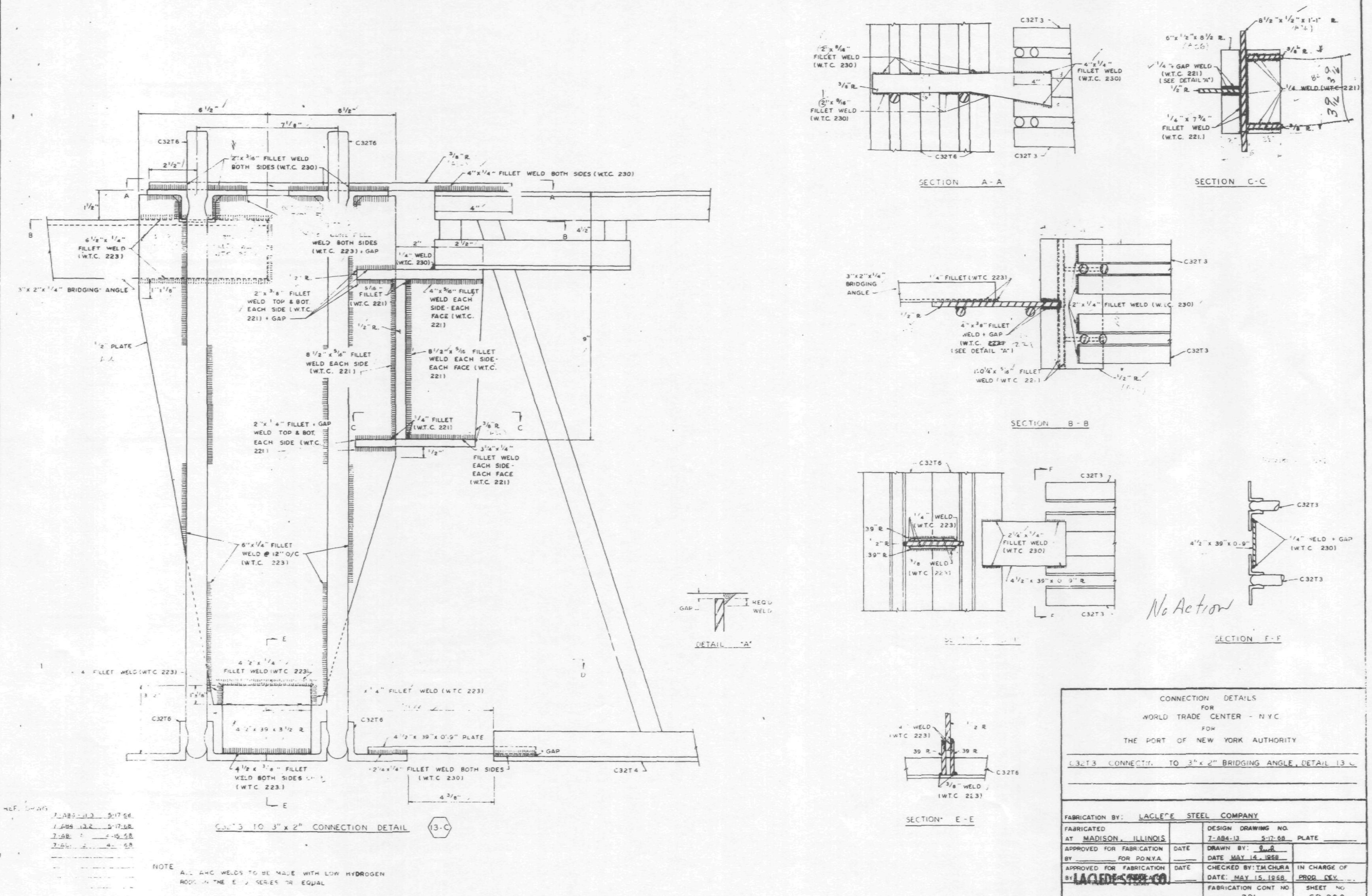

CONNECTION DETAILS
FOR
WORLD TRADE CENTER - N.Y.C.
FOR
THE PORT OF NEW YORK AUTHORITY

C32T3 CONNECTION TO 3" x 2" BRIDGING ANGLE, DETAIL 13 C

FABRICATION BY: LACLEDE STEEL COMPANY			
FABRICATED AT MADISON, ILLINOIS		DESIGN DRAWING NO. 7-AB4-13 5-17-68	PLATE
APPROVED FOR FABRICATION BY ______ FOR P.O.N.Y.A.	DATE	DRAWN BY: [illegible] DATE MAY 14, 1968	
APPROVED FOR FABRICATION BY LACLEDE STEEL CO.	DATE	CHECKED BY: T.M. CHURA DATE: MAY 15, 1968	IN CHARGE OF PROD. DEV.
DETAILED BY: A.C. WEBER		FABRICATION CONT NO. W.T.C. 221	SHEET NO. CD 209

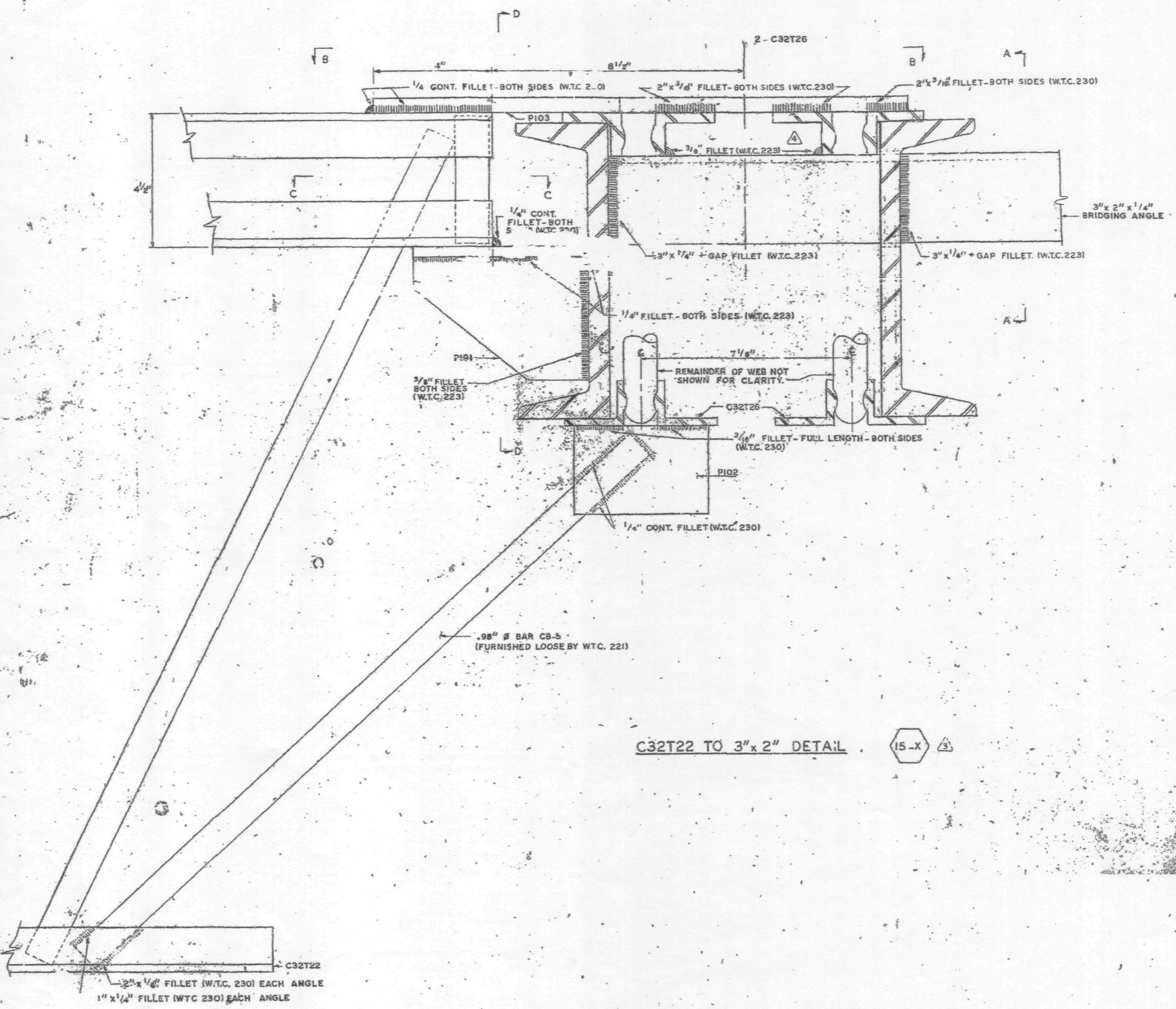

C32T22 TO 3" x 2" DETAIL. 15-X (3)

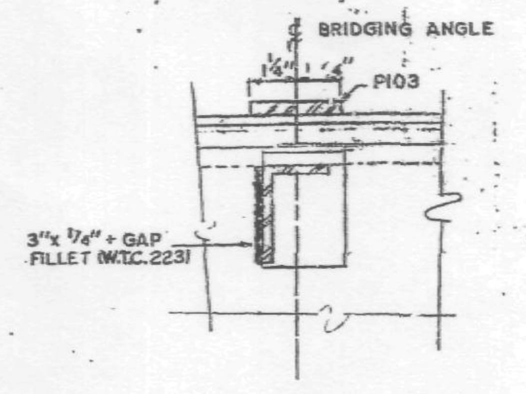

SECTION A-A

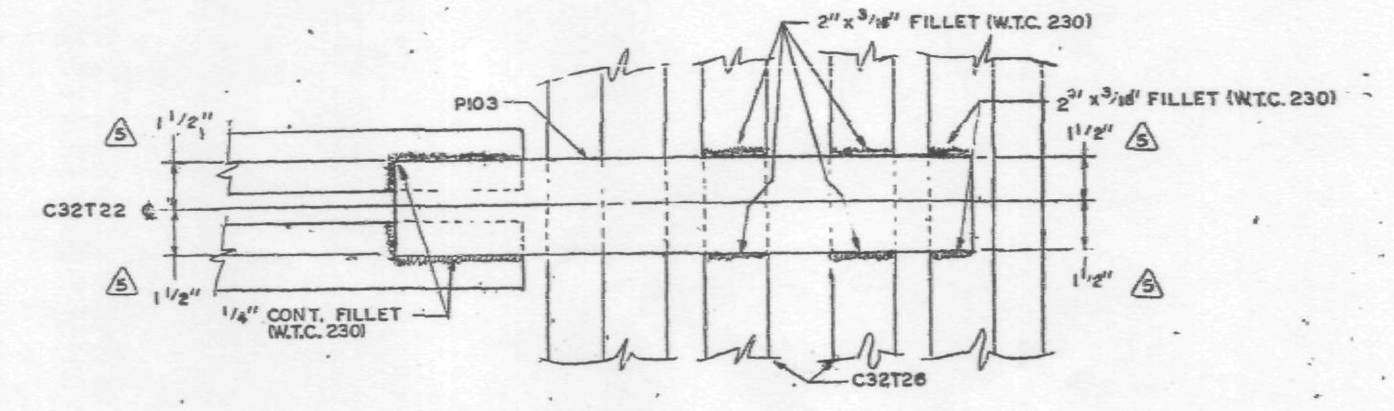

SECTION B-B

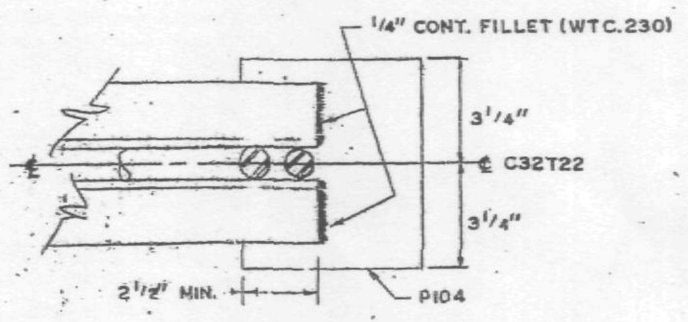

SECTION C-C

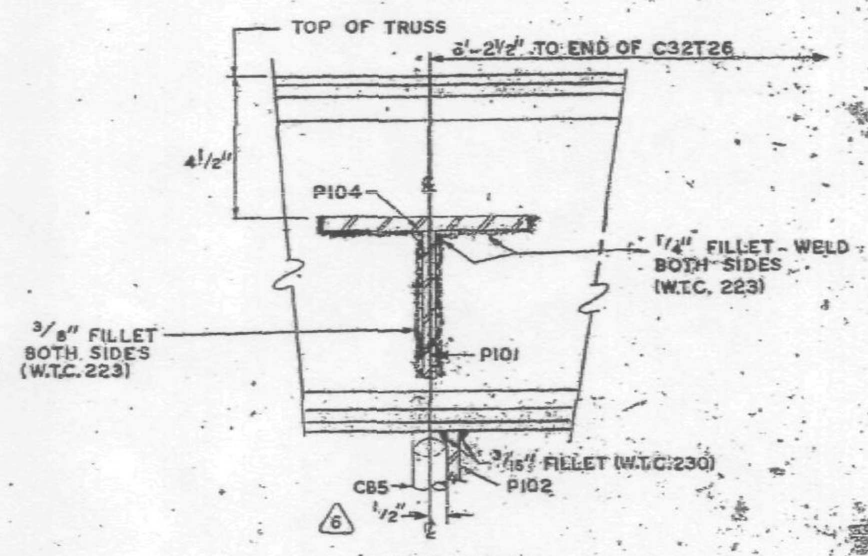

SECTION D-D

NOTES:

ALL ARC WELDS TO BE MADE WITH LOW HYDROGEN RODS IN THE E-70 SERIES OR EQUAL.
ALL PLATES TO BE ASTM A36 STEEL.
SEE DETAIL "A" FOR ALL + GAP FILLET WELDS.

DETAIL "A"

NO.	DATE	REVISION	BY
6	3-5-69	AS NOTED	G.D.C.
5	2-25-69	℞ P103 SIZE	G.D.C.
4	2-5-69	AS NOTED	G.D.C.
3	1-13-69	AS NOTED	G.D.C.
2	12-27-68	AS NOTED	G.D.C.
1	10-17-68	GENERAL	G.D.C.

CONNECTION DETAILS
FOR
WORLD TRADE CENTER - N.Y.C.
FOR
THE PORT OF NEW YORK AUTHORITY

C32T22 TO 3" x 2" BRIDGING ANGLE, DETAIL 15-X (3)

WORLD TRADE CENTER TOWERS A & B

FABRICATION BY LACLEDE STEEL COMPANY
FABRICATED AT MADISON, ILLINOIS
APPROVED FOR FABRICATION FOR P.O.N.Y.A. BY: DATE 3/13/69
APPROVED FOR FABRICATION FOR FABRICATOR BY: DATE
LACLEDE STEEL CO.
DESIGN DRAWING NO
DRAWN BY: gdc DATE OCT. 4, 1968
CHECKED BY: T.M. CHURA DATE OCT. 4, 1968
FABRICATION CONT. NO. W.T.C. 221
PLATE
IN CHARGE OF PROD. DEV.
SHEET NO CD 210

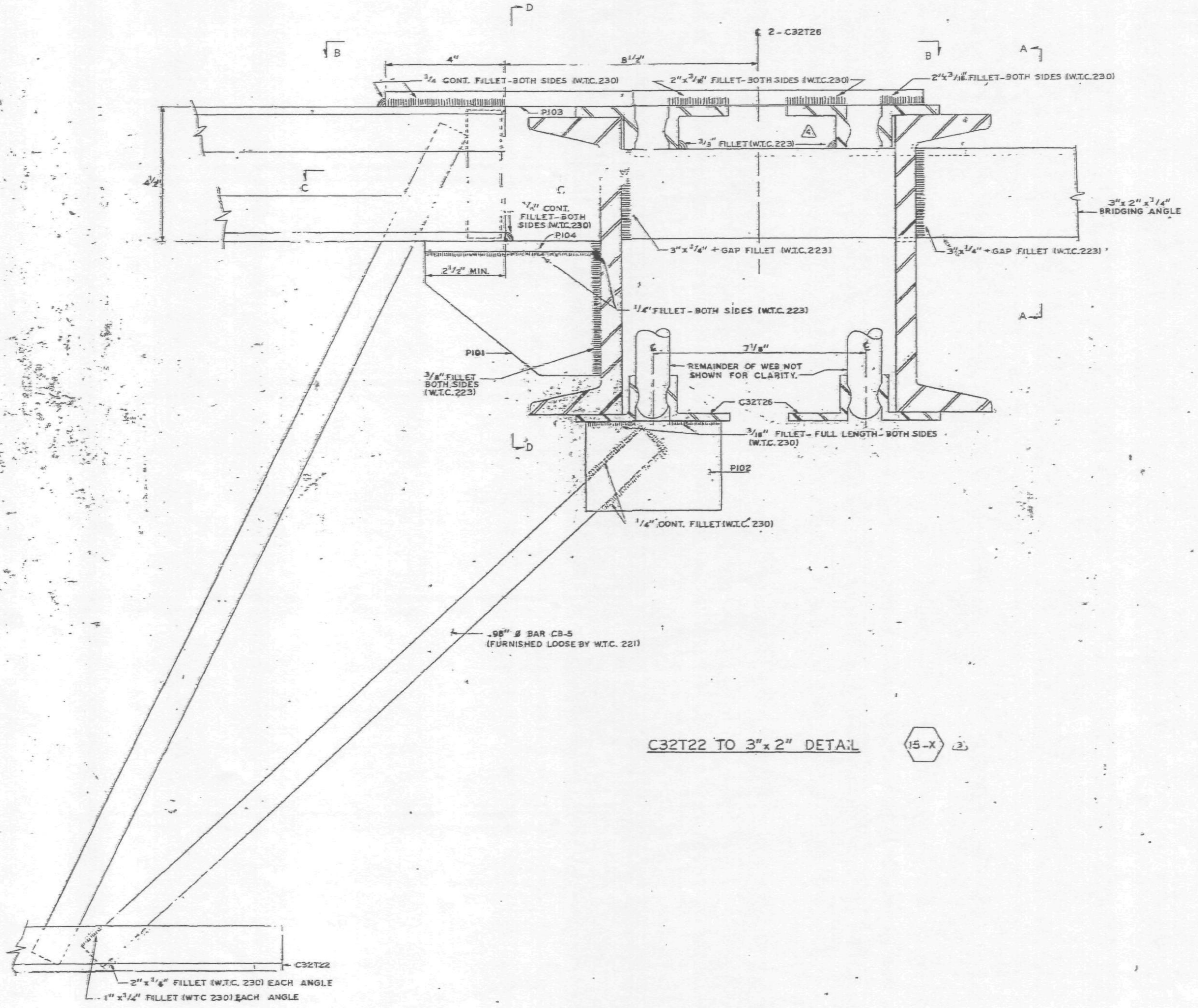

C32T22 TO 3"x 2" DETAIL (15-X) (3)

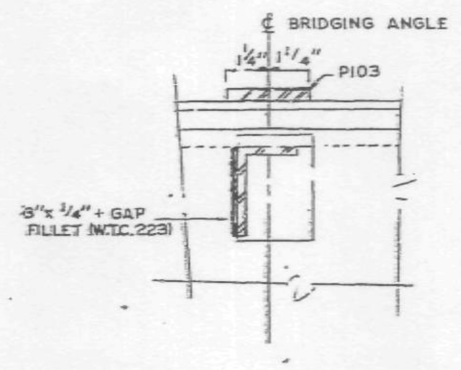

SECTION A-A

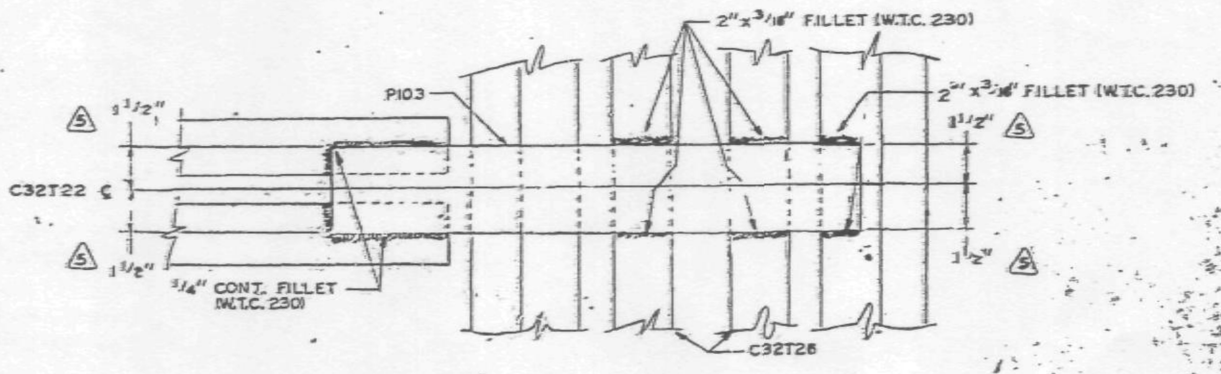

SECTION B-B

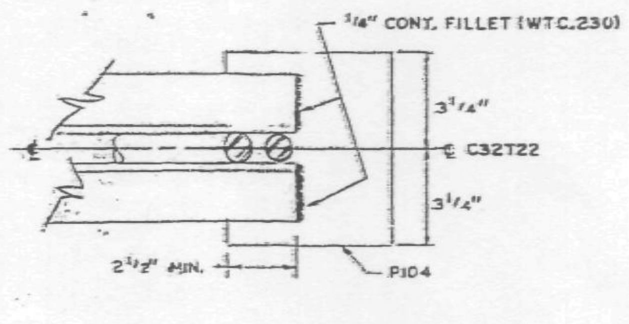

SECTION C-C

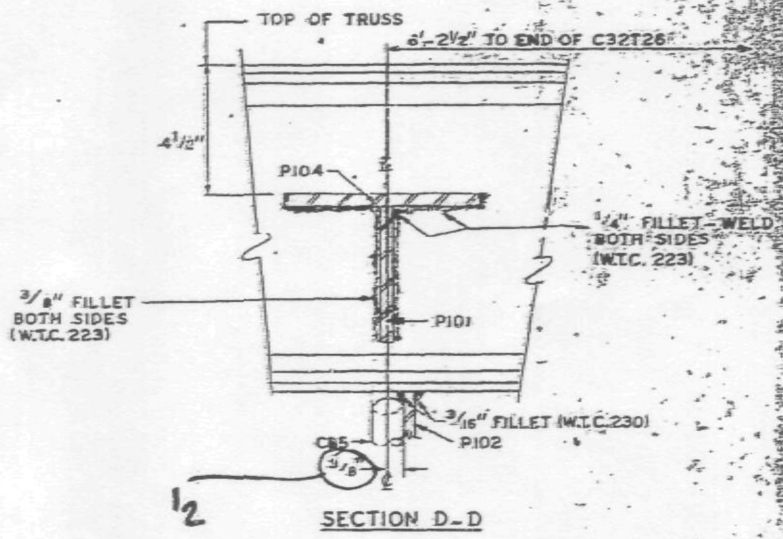

SECTION D-D

NOTES:

ALL ARC WELDS TO BE MADE WITH LOW HYDROGEN RODS IN THE E-70 SERIES OR EQUAL.
ALL PLATES TO BE ASTM A36 STEEL.
SEE DETAIL "A" FOR ALL + GAP FILLET WELDS.

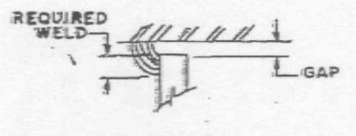

DETAIL "A"

SKILLING - HELLE
CHRISTIANSEN - ROBERTSON
Structural & Civil Engineers
Date 2/28/69 By SK

CONNECTION DETAILS
FOR
WORLD TRADE CENTER - N.Y.C.
FOR
THE PORT OF NEW YORK AUTHORITY

C32T22 TO 3"x 2" BRIDGING ANGLE, DETAIL 15-X (3)
WORLD TRADE CENTER TOWERS A & B

FABRICATION BY LACLEDE STEEL COMPANY
FABRICATED AT MADISON, ILLINOIS
DESIGN DRAWING NO.
PLATE
APPROVED FOR FABRICATION BY: FOR P.O.N.Y.A. DATE
DRAWN BY: gdc DATE OCT. 4, 1968
APPROVED FOR FABRICATION BY: FOR FABRICATOR DATE
CHECKED BY: T.M.CHURA DATE OCT. 4, 1968
IN CHARGE OF PROD. DEV.
LACLEDE STEEL CO.
DETAILED BY: A. CARL WEBER
FABRICATION CONT. NO. W.T.C. 221
SHEET NO. CD-210

NO.	DATE	REVISION	BY
5	2-25-69	P103 SIZE	G.D.C.
4	2-5-69	AS NOTED	G.D.C.
3	1-13-69	AS NOTED	G.D.C.
2	12-27-68	AS NOTED	G.D.C.
1	10-17-68	GENERAL	G.D.C.

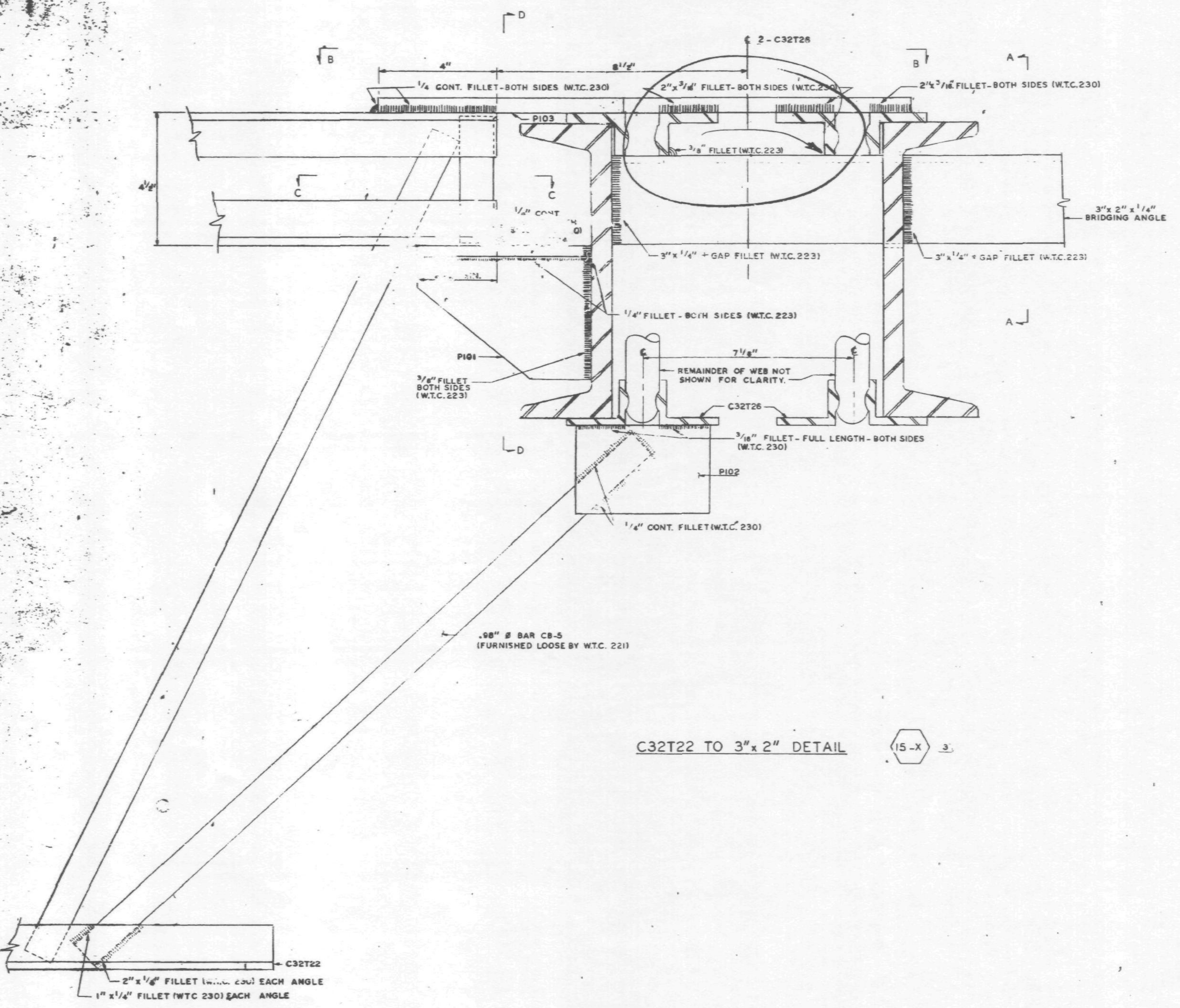

C32T22 TO 3" x 2" DETAIL (15-X) 3

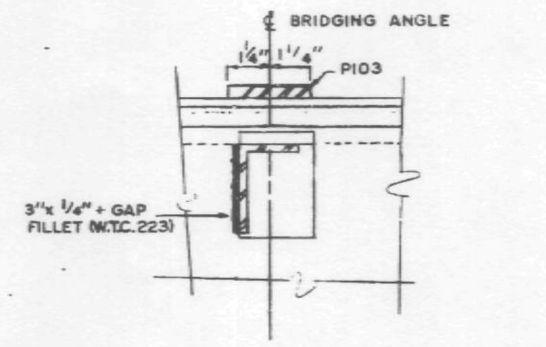

SECTION A-A

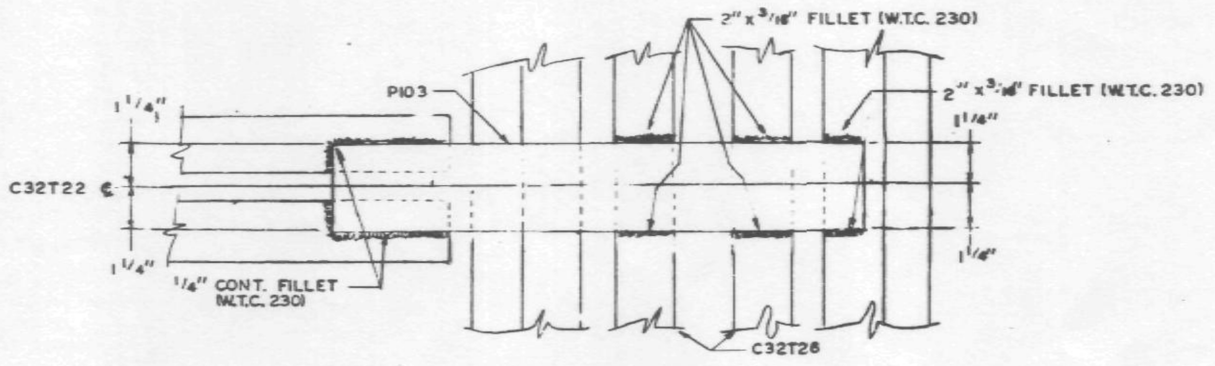

SECTION B-B

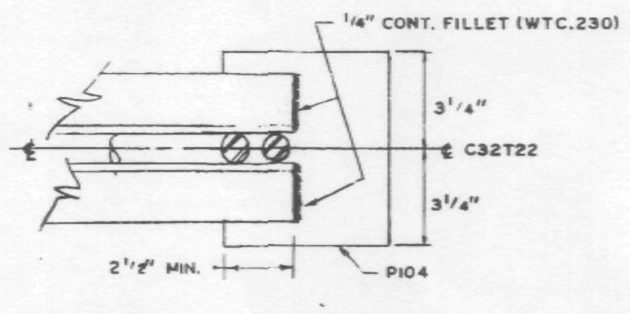

SECTION C-C

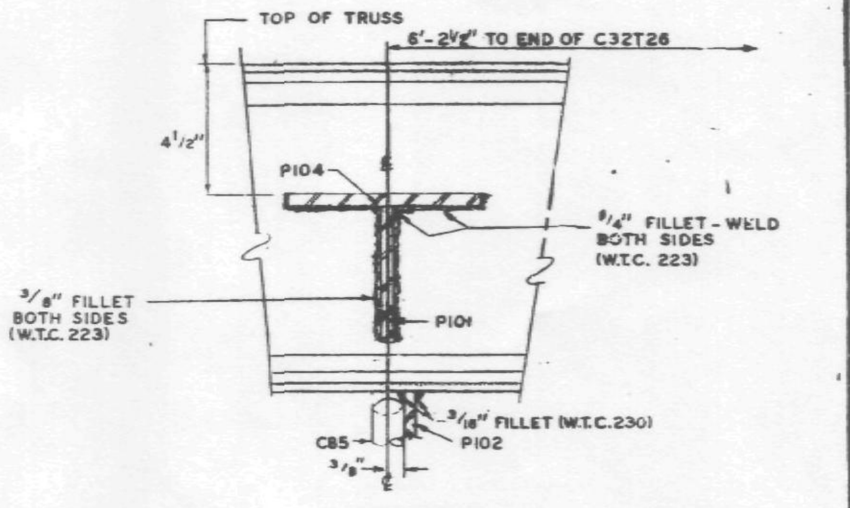

SECTION D-D

NOTES:

ALL ARC WELDS TO BE MADE WITH LOW HYDROGEN RODS IN THE E-70 SERIES OR EQUAL.
ALL PLATES TO BE ASTM A36 STEEL.
SEE DETAIL "A" FOR ALL + GAP FILLET WELDS.

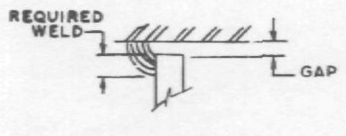

DETAIL "A"

SKILLING - HELLE CHRISTIANSEN - ROBERTSON
Structural & Civil Engineers
APPROVED
APPROVED AS NOTED
Date 1/30/69 By SK

NO.	DATE	REVISION	BY
3	1-13-68	AS NOTED	G.D.C.
2	12-27-68	AS NOTED	G.D.C.
1	10-17-68	GENERAL	G.D.C.

CONNECTION DETAILS
FOR
WORLD TRADE CENTER - N.Y.C.
FOR
THE PORT OF NEW YORK AUTHORITY

C32T22 TO 3" x 2" BRIDGING ANGLE, DETAIL 15-X (3)

WORLD TRADE CENTER TOWERS A & B

FABRICATION BY LACLEDE STEEL COMPANY

FABRICATED AT MADISON, ILLINOIS		DESIGN DRAWING NO.	PLATE
APPROVED FOR FABRICATION BY: FOR P.O.N.Y.A.	DATE	DRAWN BY: gdc DATE OCT. 4, 1968	
APPROVED FOR FABRICATION BY: FOR FABRICATOR	DATE	CHECKED BY T.M.CHURA DATE OCT. 4, 1968	IN CHARGE OF PROD. DEV.
DETAILED BY: A. CARL WEBER		FABRICATION CONT. NO. W.T.C. 221	SHEET NO. CD 210

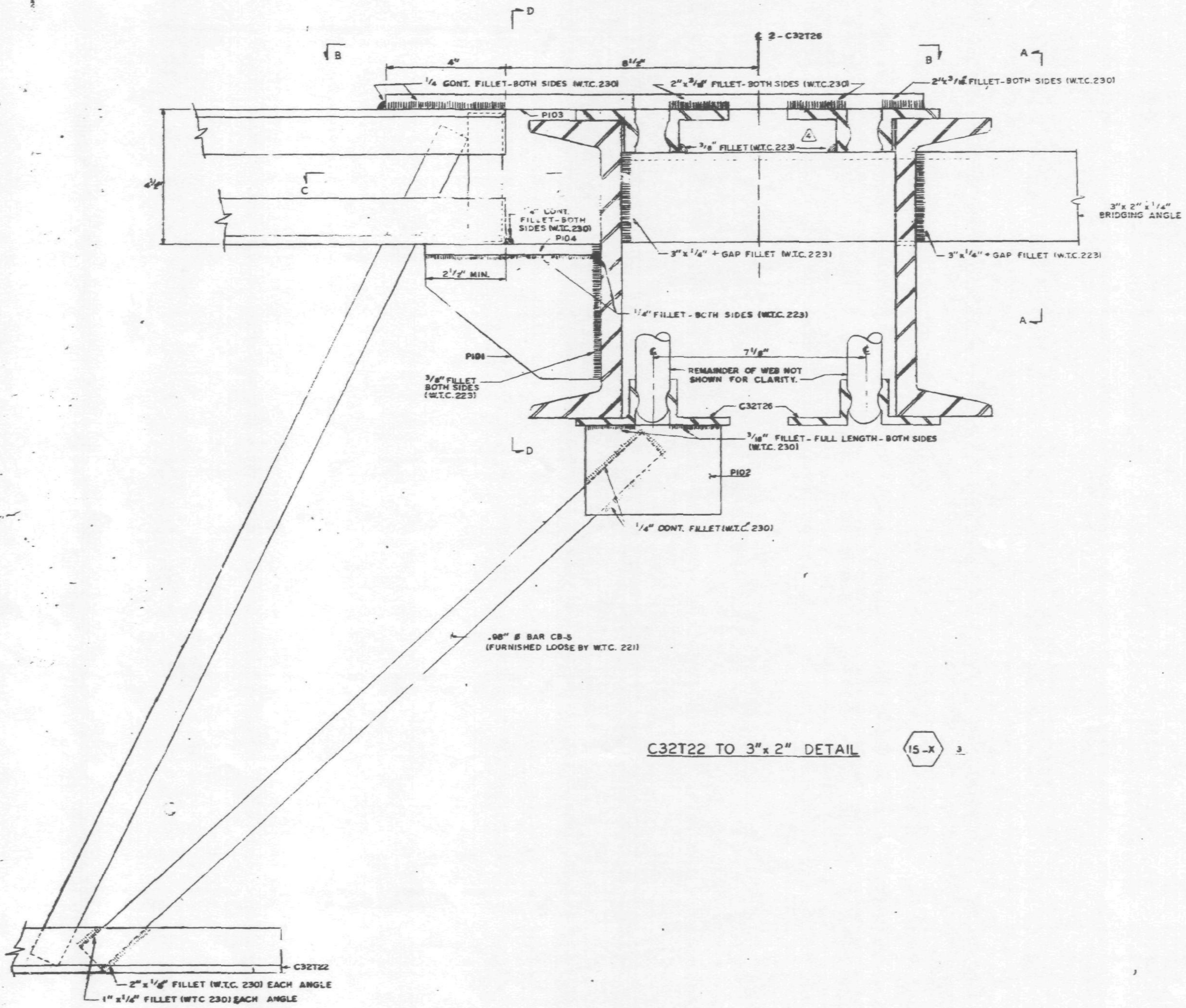

C32T22 TO 3"x 2" DETAIL (15-X) 3

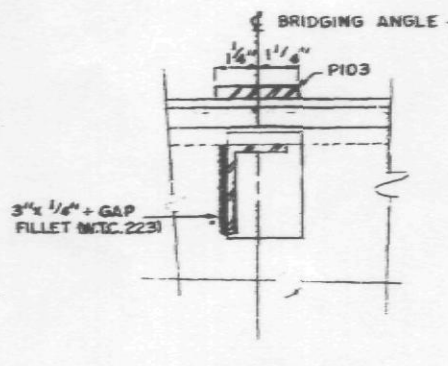

SECTION A-A

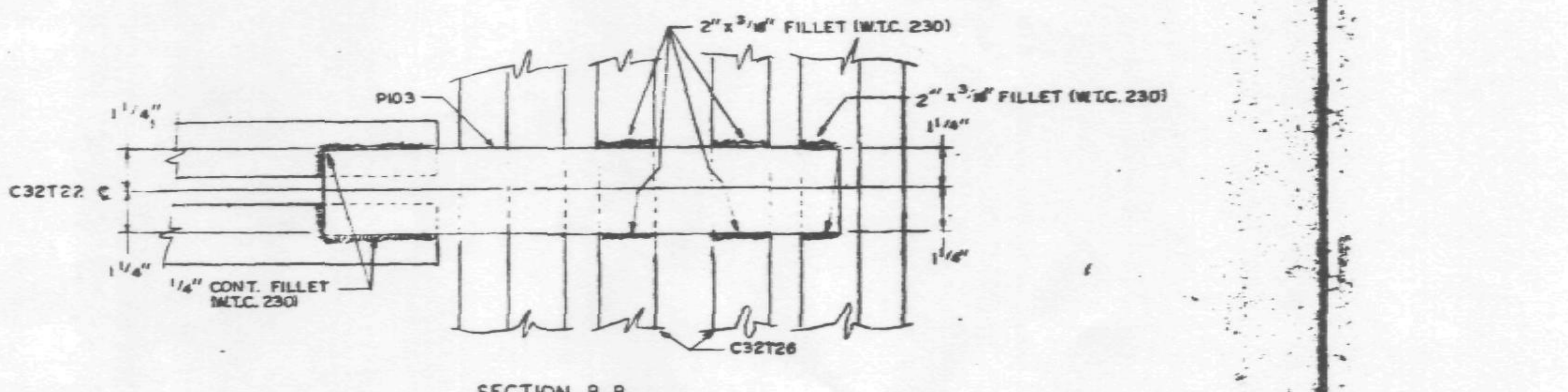

SECTION B-B

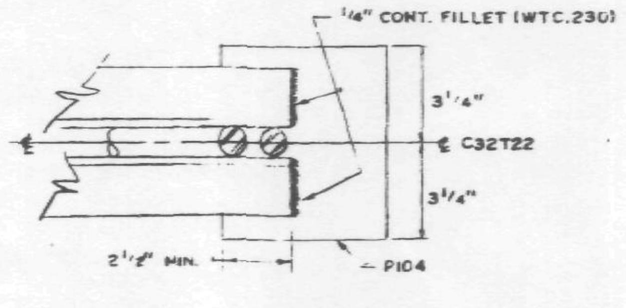

SECTION C-C

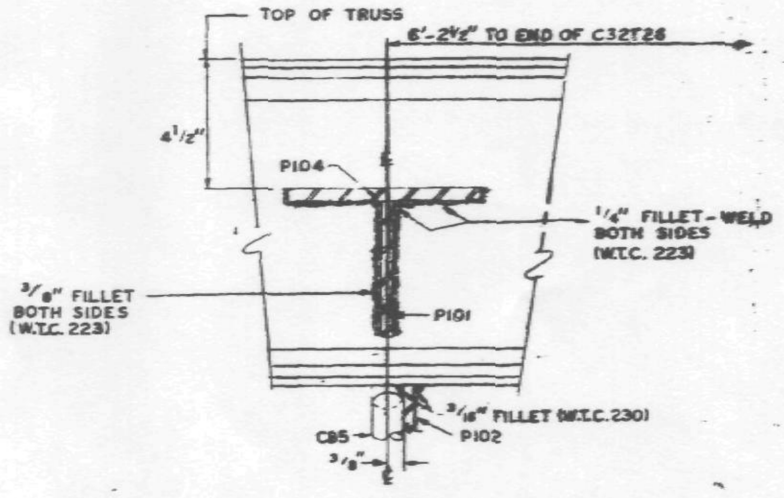

SECTION D-D

VOID

CONNECTION DETAILS
FOR
WORLD TRADE CENTER - N.Y.C.
FOR
THE PORT OF NEW YORK AUTHORITY

C32T22 TO 3"x 2" BRIDGING ANGLE . DETAIL 15-X (3)

WORLD TRADE CENTER TOWERS A & B

NOTES:
ALL ARC WELDS TO BE MADE WITH LOW HYDROGEN RODS IN THE E-70 SERIES OR EQUAL.
ALL PLATES TO BE ASTM A36 STEEL.
SEE DETAIL "A" FOR ALL +GAP FILLET WELDS.

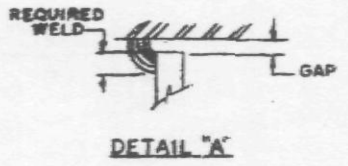

DETAIL "A"

NO.	DATE	REVISION	BY
4	2-5-69	AS NOTED	G.D.C.
3	1-13-69	AS NOTED	G.D.C.
2	12-27-68	AS NOTED	G.D.C.
1	10-17-68	GENERAL	G.D.C.

FABRICATION BY LACLEDE STEEL COMPANY

FABRICATED AT MADISON, ILLINOIS		DESIGN DRAWING NO.	PLATE
APPROVED FOR FABRICATION BY: FOR P.O.N.Y.A.	DATE	DRAWN BY: gdc DATE OCT. 4, 1968	
APPROVED FOR FABRICATION BY: FOR FABRICATOR	DATE	CHECKED BY: T.M.CHURA DATE OCT. 4, 1968	IN CHARGE OF PROD. DEV.
DETAILED FOR A. CARL		FABRICATION CONT. NO. W.T.C. 221	SHEET NO. CD 210

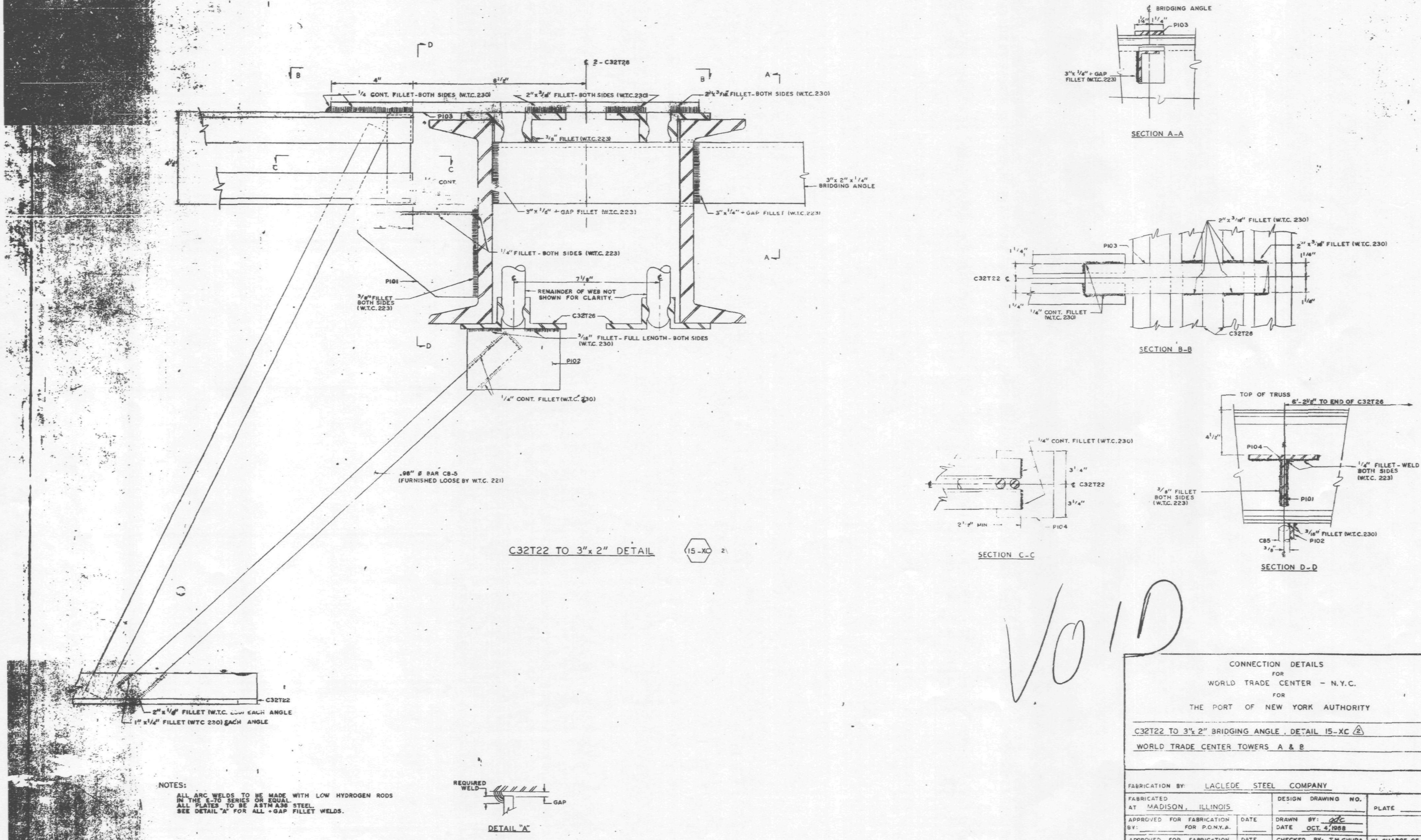

NOTES:
ALL ARC WELDS TO BE MADE WITH LOW HYDROGEN RODS IN THE E-70 SERIES OR EQUAL.
ALL PLATES TO BE ASTM A36 STEEL.
SEE DETAIL "A" FOR ALL +GAP FILLET WELDS.

NO.	DATE	REVISION	BY
2	12-27-68	AS NOTED	G.D.C.
1	10-17-68	GENERAL	G.T.C.

CONNECTION DETAILS
FOR
WORLD TRADE CENTER - N.Y.C.
FOR
THE PORT OF NEW YORK AUTHORITY

C32T22 TO 3" x 2" BRIDGING ANGLE, DETAIL 15-XC (2)

WORLD TRADE CENTER TOWERS A & B

FABRICATION BY: LACLEDE STEEL COMPANY
FABRICATED AT MADISON, ILLINOIS
APPROVED FOR FABRICATION BY: FOR P.O.N.Y.A. DATE
APPROVED FOR FABRICATION BY: FOR FABRICATOR DATE
DETAILED BY: A. CARL WEBER
DESIGN DRAWING NO.
DRAWN BY: gdc DATE OCT. 4, 1968
CHECK'D BY: T.M.CHURA DATE OCT. 4, 1968
FABRICATION CONT. NO. W.T.C. 221
PLATE
IN CHARGE OF PROD. DEV.
SHEET NO. CD 210

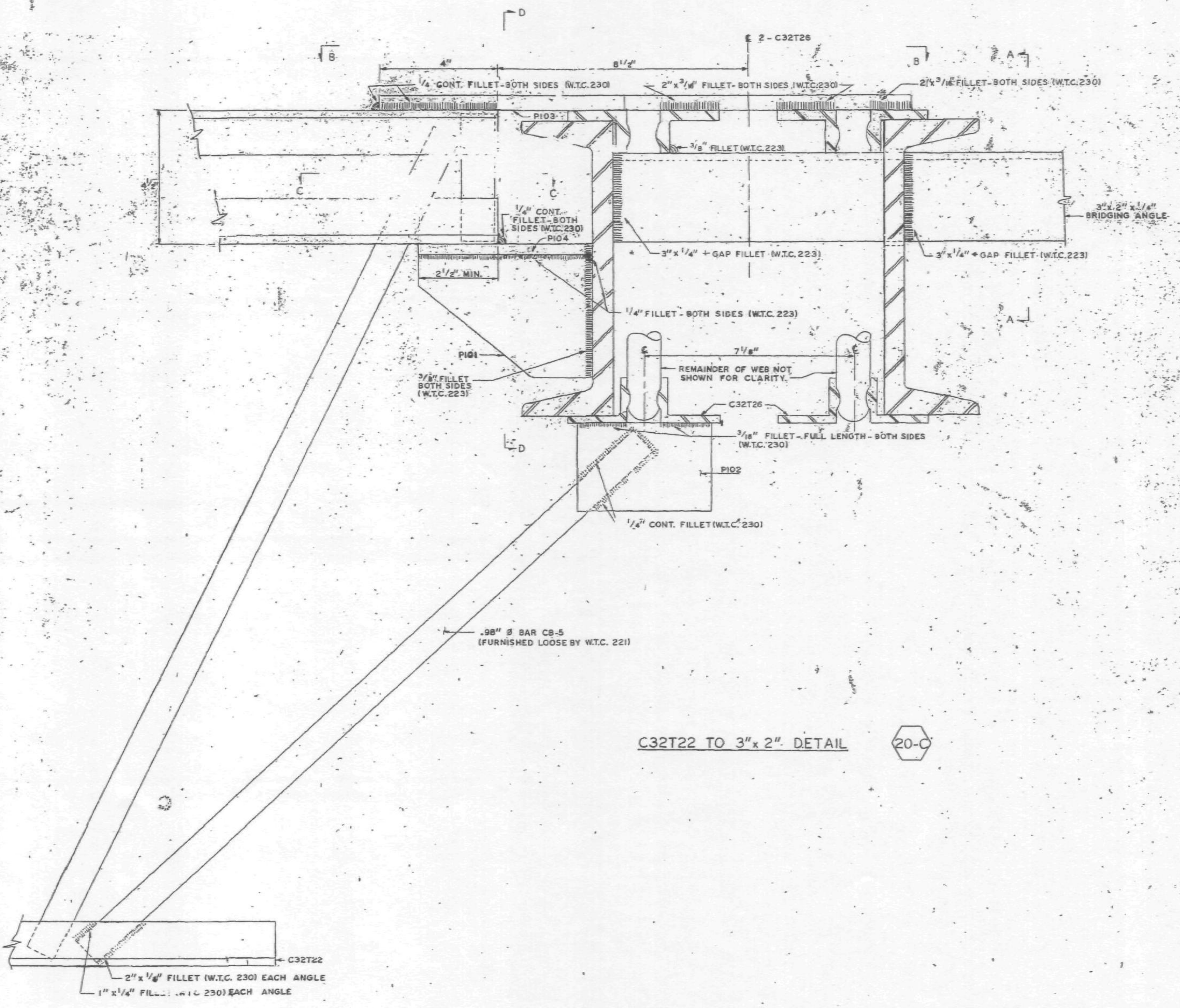

C32T22 TO 3" x 2" DETAIL (20-C)

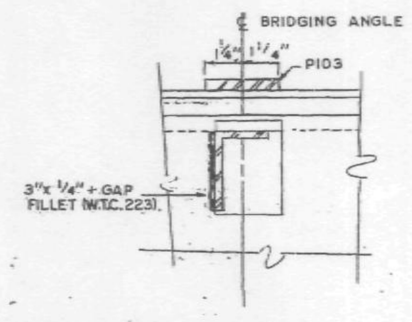

SECTION A-A

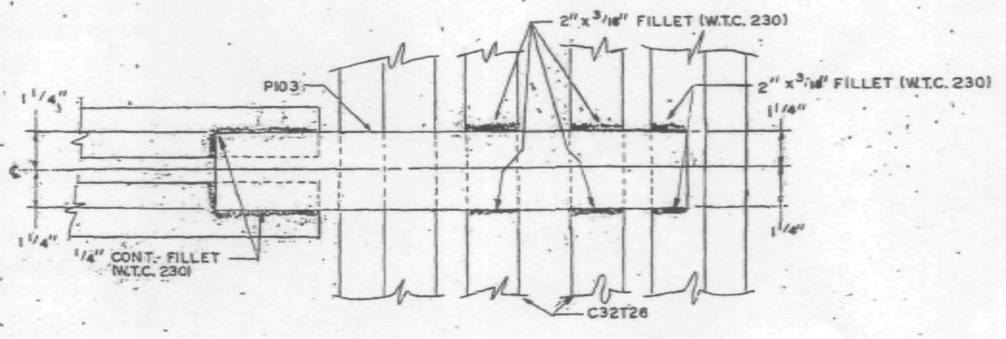

SECTION B-B

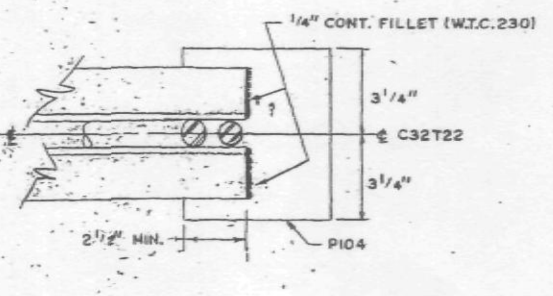

SECTION C-C

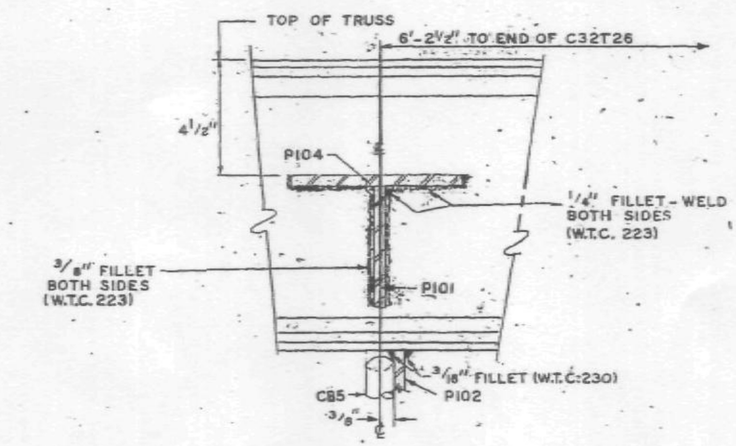

SECTION D-D

NOTES:

ALL ARC WELDS TO BE MADE WITH LOW HYDROGEN RODS IN THE E-70 SERIES OR EQUAL.
ALL PLATES TO BE ASTM A36 STEEL.
SEE DETAIL "A" FOR ALL + GAP FILLET WELDS.

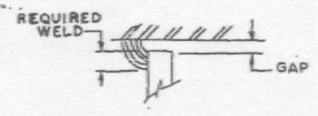

DETAIL "A"

NO.	DATE	REVISION	BY
1	10-17-68	GENERAL	G.D.C.

CONNECTION DETAILS
FOR
WORLD TRADE CENTER - N.Y.C.
FOR
THE PORT OF NEW YORK AUTHORITY

C32T22 TO 3" x 2" BRIDGING ANGLE, DETAIL 20-C
WORLD TRADE CENTER TOWERS A & B

FABRICATION BY LACLEDE STEEL COMPANY			
FABRICATED AT MADISON, ILLINOIS		DESIGN DRAWING NO.	PLATE
APPROVED FOR FABRICATION BY: FOR P.O.N.Y.A.	DATE 10/23/68	DRAWN BY: gdc DATE OCT. 4, 1968	
APPROVED FOR FABRICATION BY: FOR FABRICATOR	DATE	CHECKED BY: T.M. CHURA DATE OCT. 4, 1968	IN CHARGE OF PROD. DEV.
DETAILED BY: A. CARL-WEBER		FABRICATION CONT. NO. W.T.C. 221	SHEET NO. CD 210

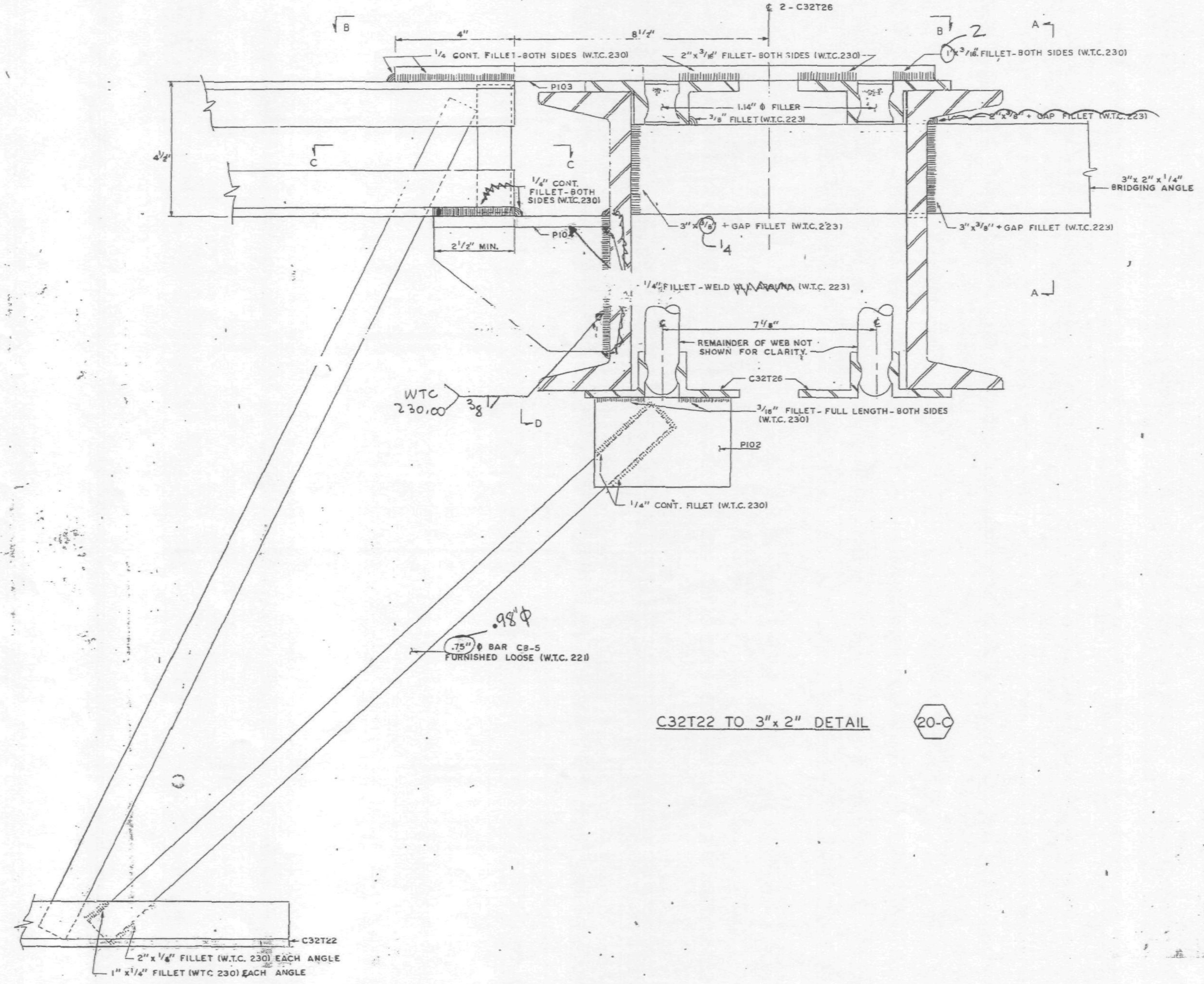

C32T22 TO 3"x 2" DETAIL (20-C)

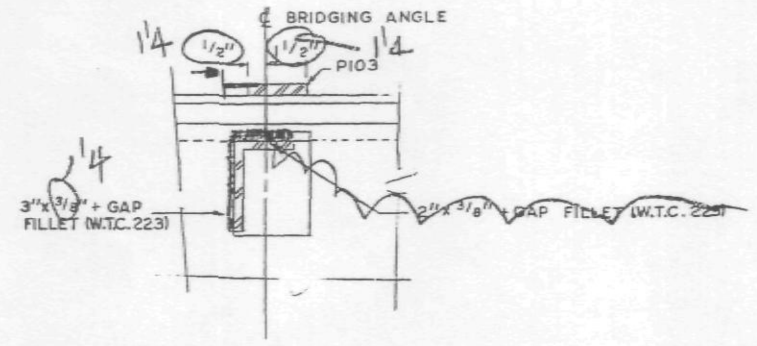

SECTION A-A

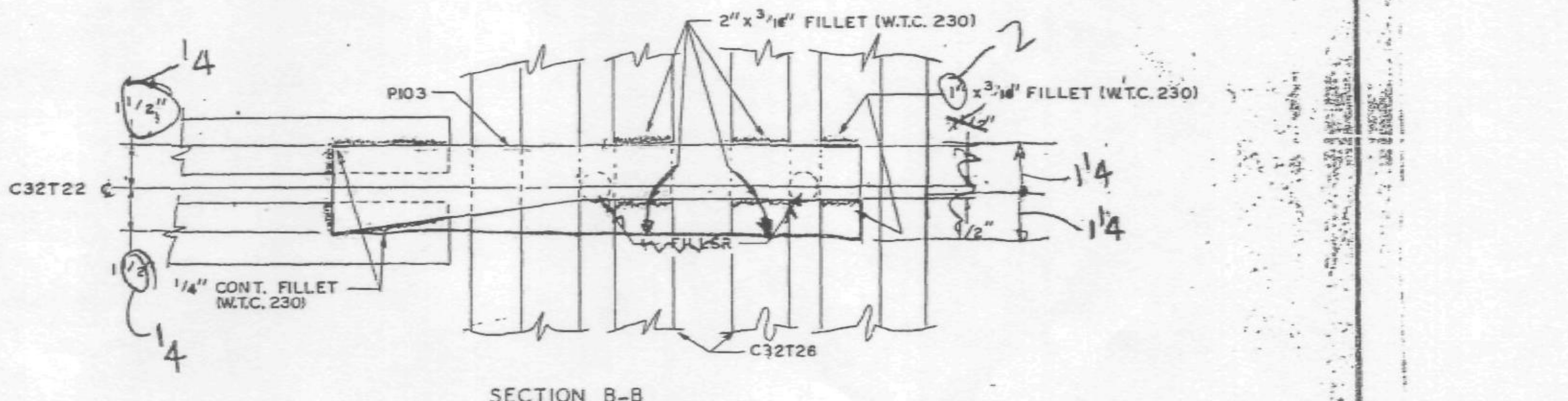

SECTION B-B

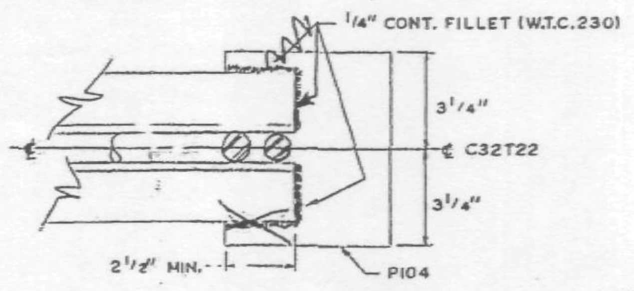

SECTION C-C

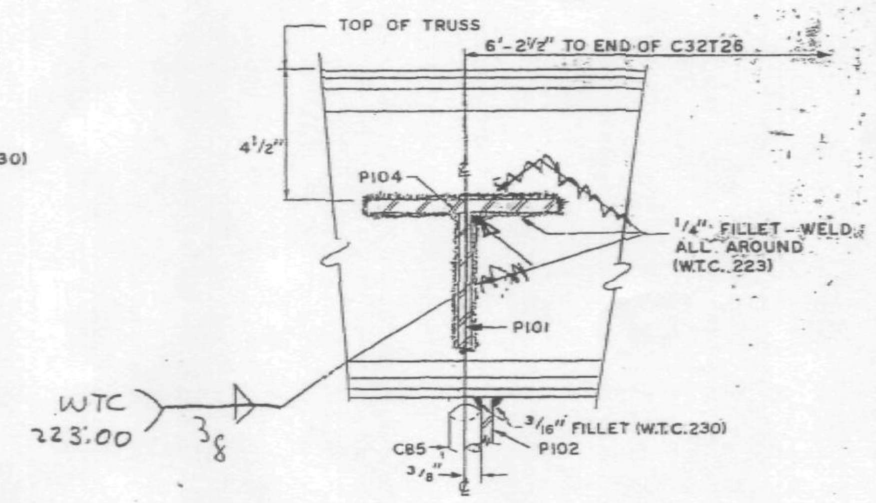

SECTION D-D

SKILLING HELLE CHRISTIANSEN ROBERTSON
Structural & Civil Engineers
APPROVED
X APPROVED AS NOTED
RESUBMIT
REJECTED
10/15/68 SK

RECEIVED

NOTES:
ALL ARC WELDS TO BE MADE WITH LOW HYDROGEN RODS IN THE E-70 SERIES OR EQUAL.
ALL PLATES TO BE ASTM A36 STEEL.
SEE DETAIL "A" FOR ALL + GAP FILLET WELDS.

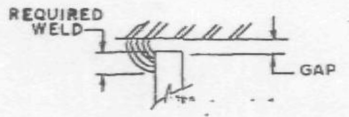

DETAIL "A"

CONNECTION DETAILS
FOR
WORLD TRADE CENTER - N.Y.C.
FOR
THE PORT OF NEW YORK AUTHORITY

C32T22 TO 3"x 2" BRIDGING ANGLE, DETAIL 20-C
WORLD TRADE CENTER TOWERS A & B

FABRICATION BY [illegible] COMPANY		
FABRICATED AT MADISON, ILLINOIS	DESIGN DRAWING NO.	PLATE
APPROVED FOR FABRICATION BY: FOR P.O.N.Y.A — DATE	DRAWN BY: gdc DATE OCT. 4, 1968	
APPROVED FOR FABRICATION BY: FOR FABRICATOR — DATE	CHECKED BY: T.M. CHURA DATE OCT. 4, 1968	IN CHARGE OF PROD. DEV.
DETAILED BY: A. CARL WEBER	FABRICATION CONT. NO. W.T.C. 221	SHEET NO. CD 210

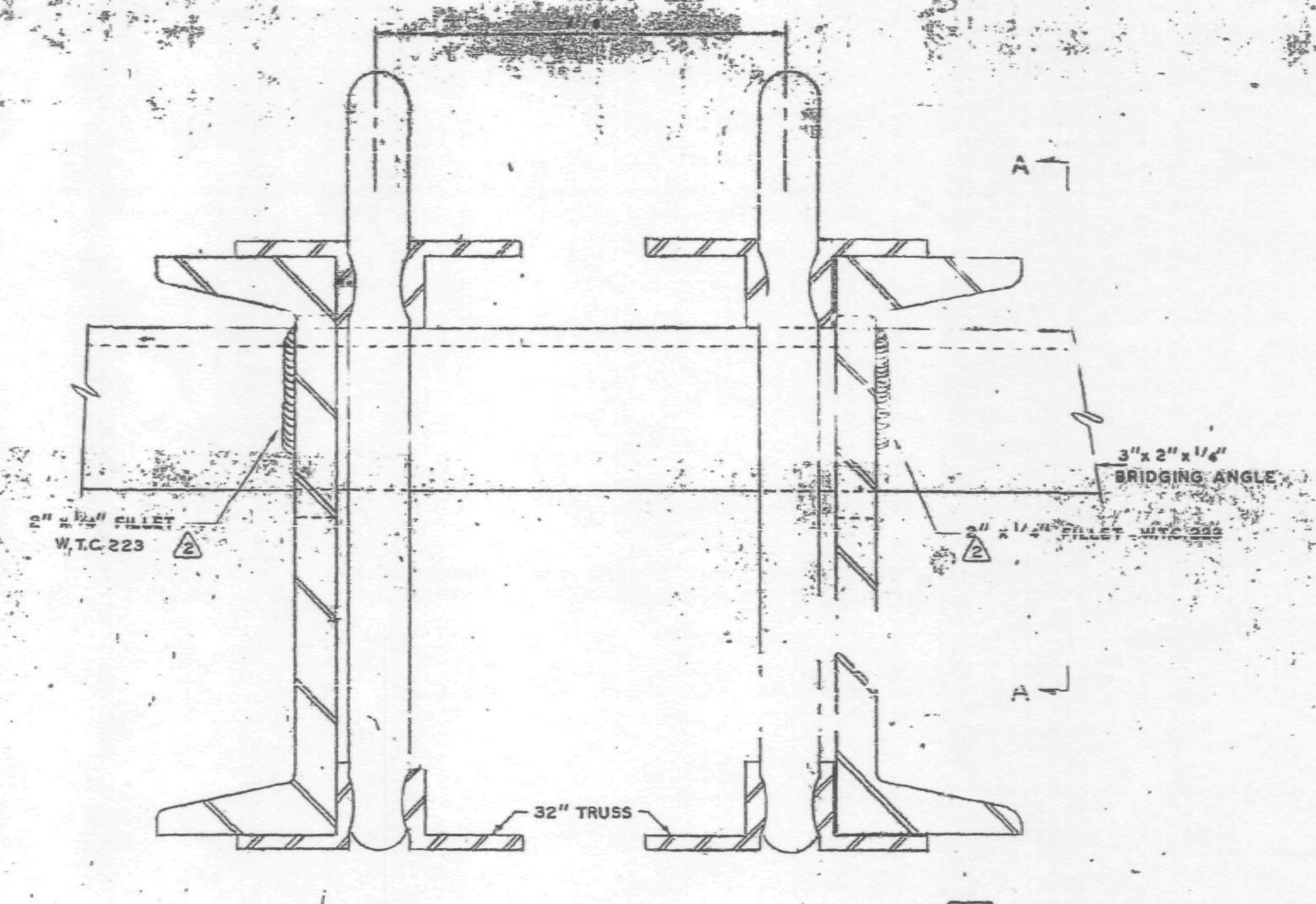

INTERIOR BRIDGING ANGLE CONNECTION (1-X)

PANELS: A2, B2, BR2, C2, CR2, D2
DR2, E2, ER2, F2 & FR2

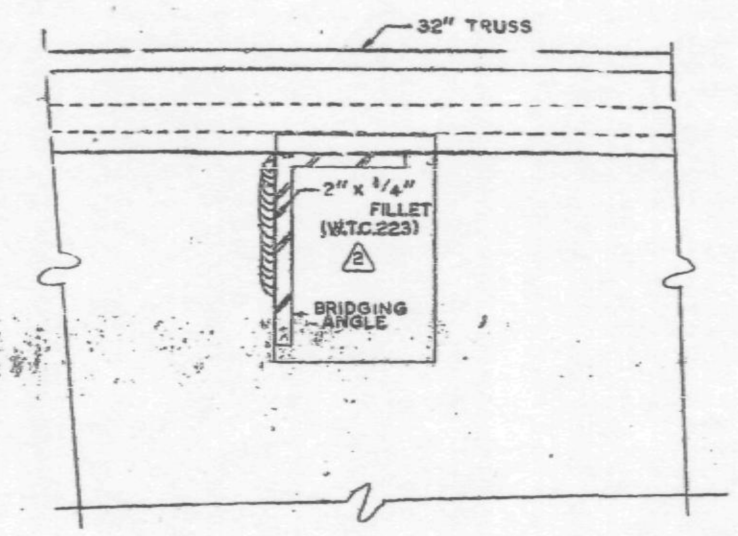

SECTION A-A

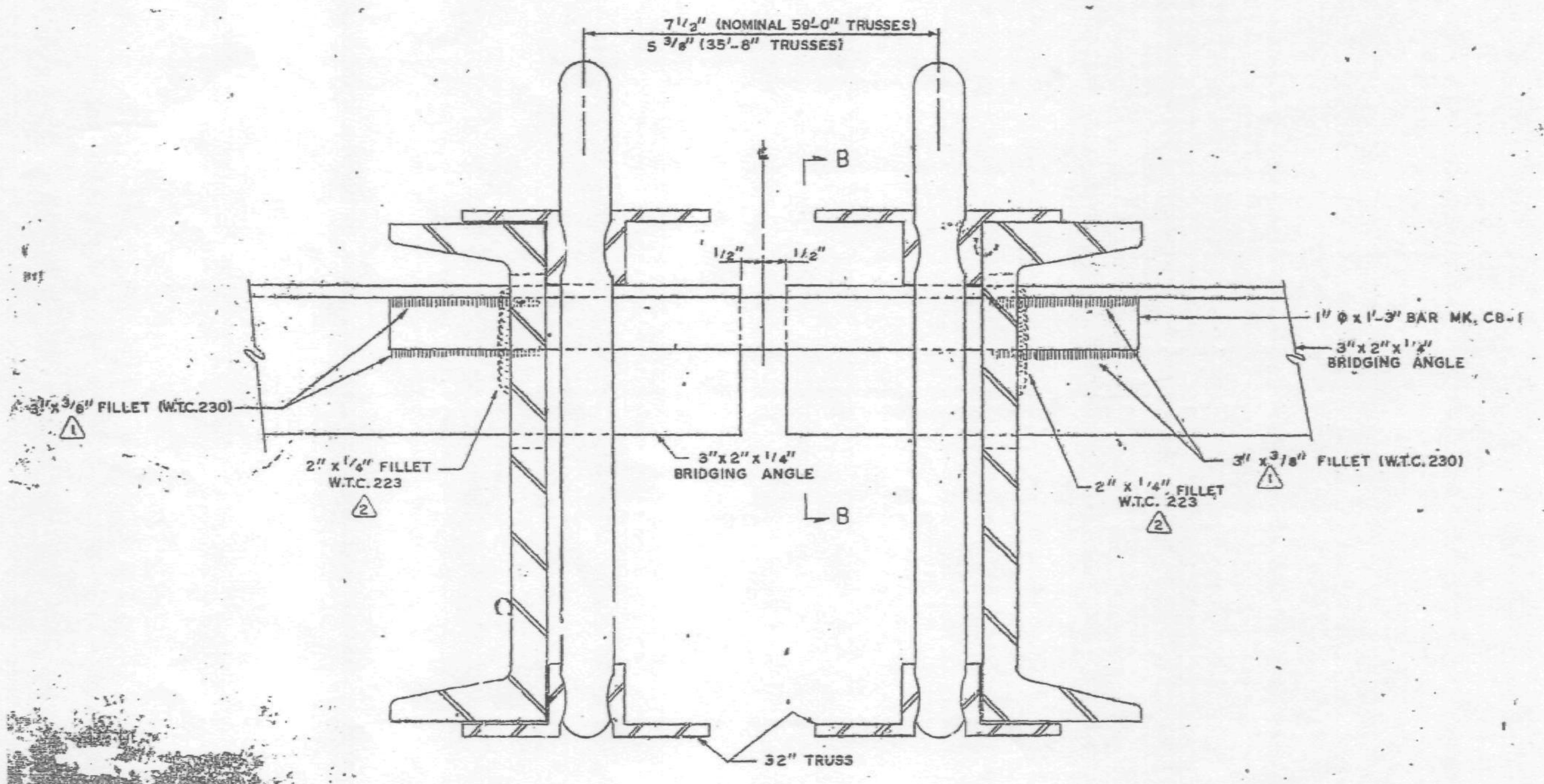

PANEL JOINT BRIDGING ANGLE CONNECTION (2-X)

PANELS: A2, B2, BR2, C2, CR2, D2, DR2, E2, ER2, F2, FR2, G2,
GR2, H7, HR2 & J2.

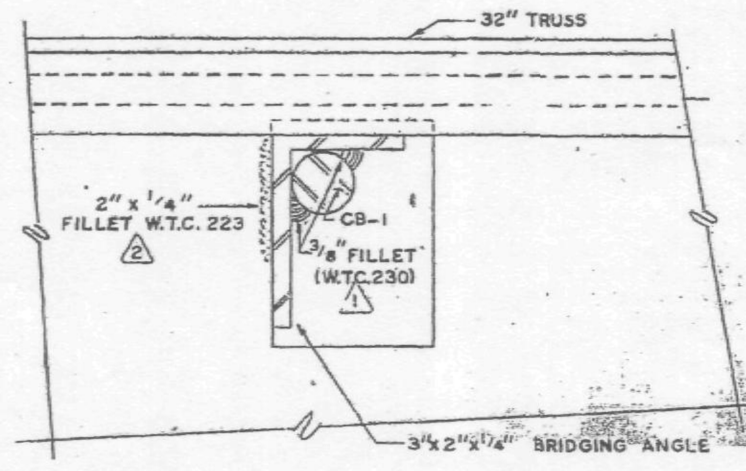

SECTION B-B

LIST OF FLOOR CONNECTION INDENTIFICATIONS FOR FLOORS 2?, 59, & 92
TOWERS A & B

Connection Designation		Drawing No.
1-X	Connection of 3" x 2" x 1/4" Bridging Angles with Extended End 32" Truss in Panels A2, B2, BR2, C2, CR2, D2, DR2, E2, ER2, F2 and FR2	CD 211
1-XA	Connection of 3" x 2" x 1/4" Bridging Angles with Extended End 32" Truss in Panels G2, GR2, H7, HR2 and J2	CD [illegible]
1-XC	Connection of 3" x 2" x 1/4" Bridging Angles with C32 Trusses at Interior Panel Point	CD 220
2-X	Standard Connection of 3" x 2" x 1/4" Bridging Angles with Extended End 32" Truss at Panel Joints	CD 211
2-XC	Connection of 3" x 2" x 1/4" Bridging Angles with C32 Trusses at Panel Joints (Except Special Cases 2-X, 13XC, 14XC and 15XC)	CD 220
3-XA	Connection of A35 and AA21 with a 32T22 in F2 and FR2 Panels	CD 218
3-XB	Connection of AA22 and AA23 with a C32T22 in F2 and FR2 Panels	CD 21?
3-XC	Connection of AA9 Bridging Angles with C32T22 in F2 and FR2 Panels	CD 223
4-X	Connection of Interior Bridging Trusses with Extended End 32" Floor Trusses in Panels A2, B2, BR2, B7, BR7, C2, CR2, D2, DR2, D7, DR7, E2 and ER2	CD 215
4-XA	Connection of Interior Bridging Trusses with C32T21 in Panels F2 and FR2	CD 2??
4-XCA	Connection of 24T Bridging Trusses with C32 Trusses at Interior Panel Points (Panels A, B, BR, C and CR)	CD 220
4-XCB	Connection of 24T Bridging Trusses with C32 Trusses at Interior Panel Points (Panels G2, GR2, H2, H7, HR7, HR2, J2)	CD 220
5-X	Connection of 24T14A Bridging Trusses with C32T22 Trusses at Interior Panel Points (Panels F2 and FR2)	CD 218
5-XC	Connection of 24T Bridging Trusses with C32 Trusses at Interior Panel Points (Panels D, DR, E, ER, F, FR, G and GR except 5-X, 6-X, 6-XA Connections in Panel F and FR)	CD 220
6-X	Connection of Interior Bridging Trusses 24T7C or 24T7E with C32T22	CD 219
6-XA	Connection of 24T7D Bridging Trusses with C32T22 at Interior Panel Points	CD 219
7-X	Connection of the following Bridging Trusses at Panel Joints: 24T14A to 2?1?A, or 24T11B to 24T13D, 1?, 16B or 16C	CD 212
7-XC	Connection of 24T Bridging Trusses with C32 Trusses at Panel Joints except Special Cases 8-XC, 9-XC, 10-XC, 11-XC	CD 220
8-XC	Connections of the following Bridging Trusses at Panel Joints: 24T? to 24T10 or 24T10C 24T?A to 24T10A or 24T10D 24T?? to 24T10? or 24T10E	CD 221
9-X	Connection of 24T1?? Bridging Trusses with 24T11B Bridging Truss at a Panel Joint	CD ?13
9-XC	Connections of the following Bridging Trusses at Panel Joints: 24T? to 24T11A, or 24?A to 24T11C	CD 22?
10-XC	Connections of the following Bridging Trusses at Panel Joints 24T? to ?4T?C 24T8A to 24T?? 24T?? to 24T7E	CD 221
11-X	Connection of the ??T15A Bridging Trusses at a 24T16B or 16C at a Panel Joint	CD 214
11-XC	Connection of 24T12 Bridging Truss with the 24T10, 10A, B, C, 10D, or 10E Bridging at Panel Joints (2)	CD 223
12-XC	Reserved	
13-XC	Connection of 3" x 2" x 1/4" Bridging Angle at Double C32T26 Trusses with Double C??T18 Trusses	CD 228
14-XC	Connection of 3" x 2" x 1/4" Bridging Angle at Double C32T26 Trusses Double C??T20 Trusses	CD 226
15-X	Connection of 3" x 2" x 1/4" Bridging Angle at Double C32T26 with a C32T22	CD 210
16-XC	Connection of 24T9 Bridging Truss at Double C32T26 Trusses with Double C??T19 Trusses	CD 227
17-XC	Connection of 24T9A Bridging Truss at Double C32T26 Trusses with Double C??T?1 Trusses	CD 225
18-XC	Connection of 3" x 2" x 1/4" Bridging Angle with the Double C32T18 Trusses in Panel E and ER at Second Line of Bridging from Core End	CD 223
19-XC	Connection of 3" x 2" x 1/4" Bridging Angle with the Double C32T15 Trusses at the Panel Joint of Panels E to Panel D or Panel ER to Panel DR at Second Line of Bridging from Core End	CD 223

NO.	DATE	REVISION	BY
2	3-?-69	AS NOTED	G.D.C.
1	2-5-69	AS NOTED	G.D.C.

CONNECTION DETAILS
FOR
WORLD TRADE CENTER - N.Y.C.
FOR
THE PORT OF NEW YORK AUTHORITY

STANDARD CONNECTION DETAILS 1-X & 2-X

FABRICATION BY: LACLEDE STEEL COMPANY

FABRICATED AT MADISON, ILLINOIS		DESIGN DRAWING NO.	PLATE
APPROVED FOR FABRICATION BY: James White FOR P.O.N.Y.A.	DATE 3/13/69	DRAWN BY: gdc DATE OCT. 8, 1968	
APPROVED FOR FABRICATION BY: FOR FABRICATOR	DATE	CHECKED BY: T.M. CHURA DATE OCT. 8, 1968	IN CHARGE OF PROD. DEV.
DETAILED BY: A. CARL WEBER		FABRICATION CONT. NO. W.T.C. 221	SHEET NO. CD 211

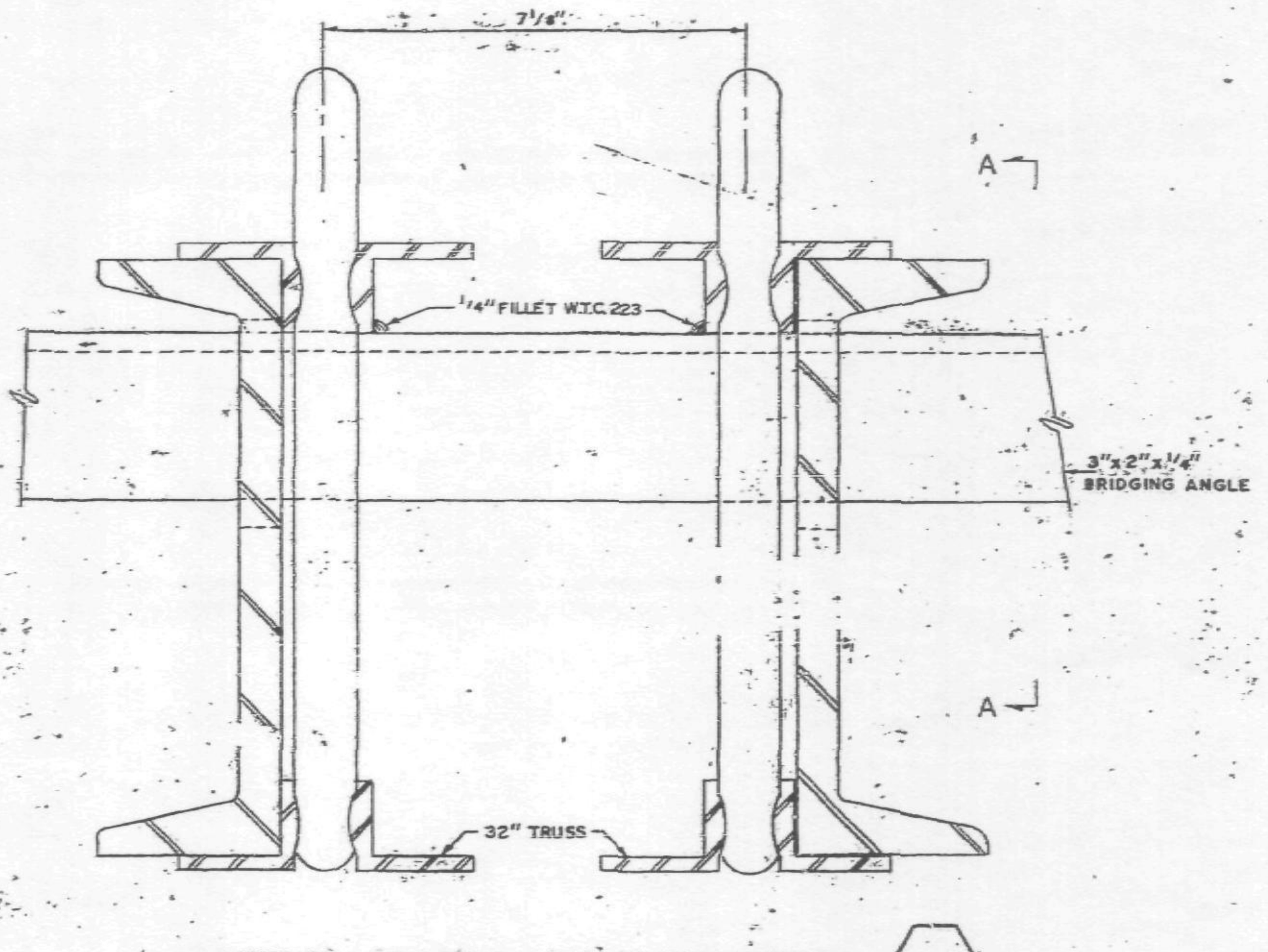

INTERIOR BRIDGING ANGLE CONNECTION (1-X)

PANELS: A2, B2, BR2, C2, CR2, D2
DR2, E2, ER2, F2 & FR2

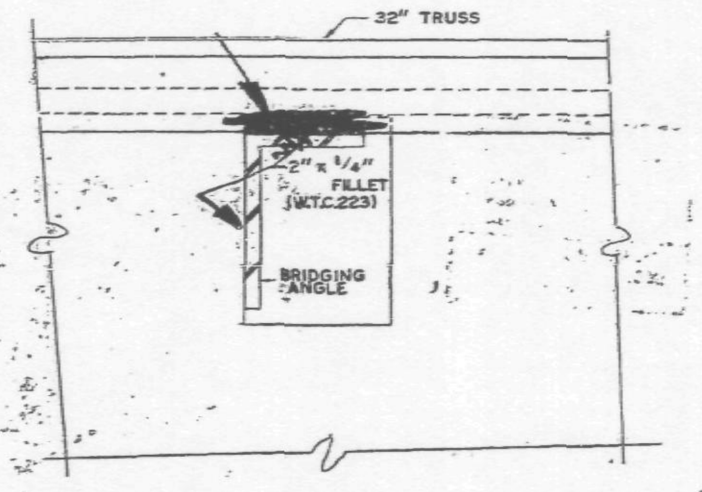

SECTION A-A

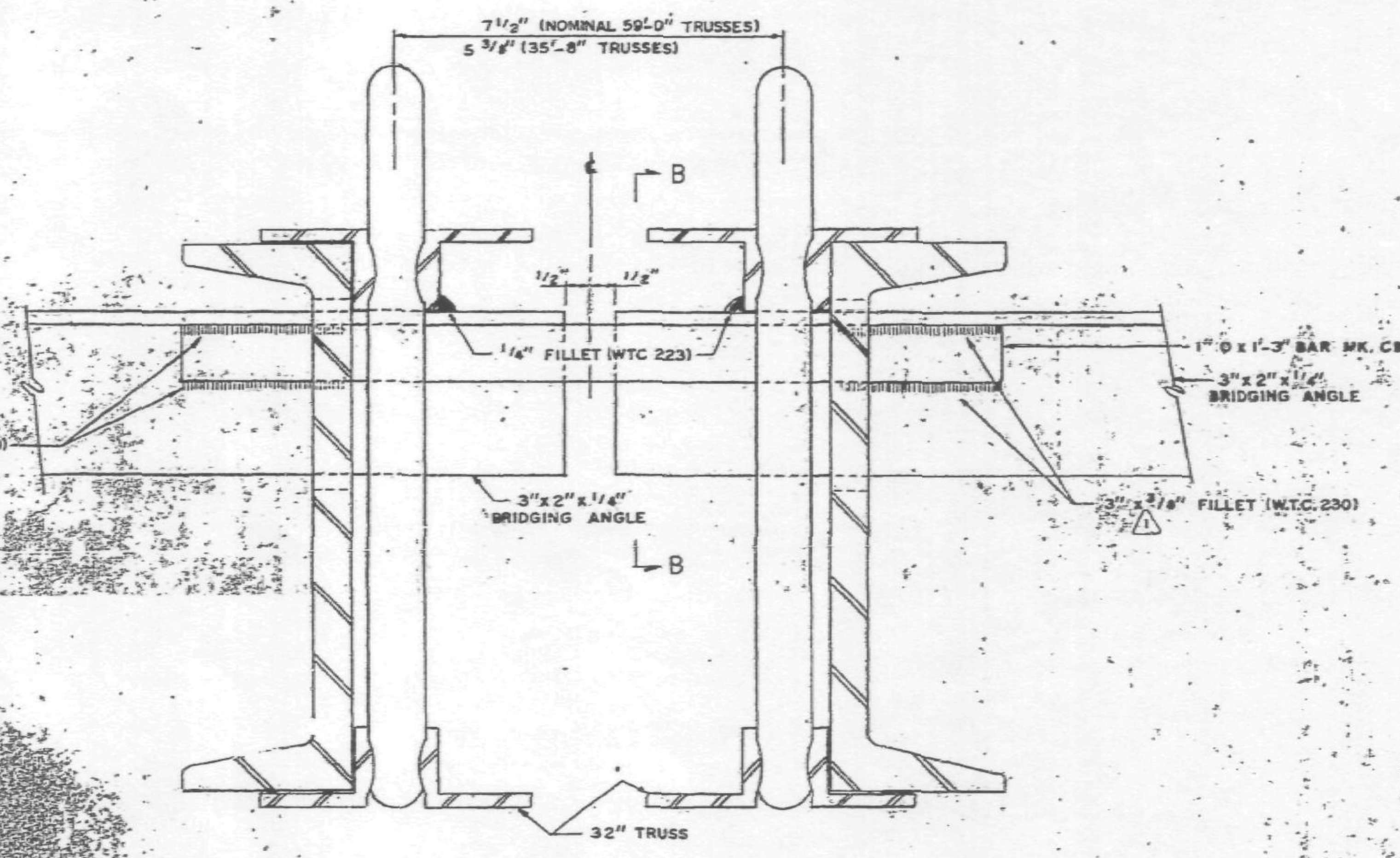

PANEL JOINT BRIDGING ANGLE CONNECTION (2-X)

PANELS: A2, B2, BR2, C2, CR2, D2, DR2, E2, ER2, F2, FR2, G2,
GR2, H7, HR2 & J2.

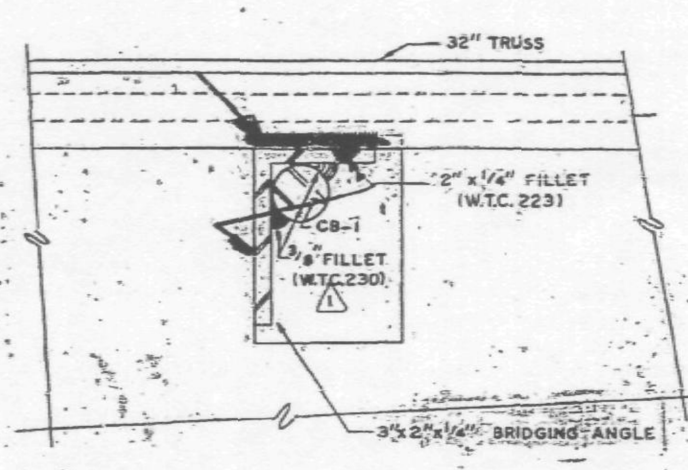

SECTION B-B

LIST OF FLOOR CONNECTION INDENTIFICATIONS FOR FLOORS 25, 59, & 92

TOWERS A & B

Connection Designation		Drawing No.
1-X	Connection of 3" x 2" x 1/4" Bridging Angles with Extended End 32" Truss in Panels A2, B2, BR2, C2, CR2, D2, DR2, E2, ER2, F2 and FR2	CD 211
1-XA	Connection of 3" x 2" x 1/4" Bridging Angles with Extended End 32" Truss in Panels G2, GR2, H7, HR2 and J2	CD 217
1-XC	Connection of 3" x 2" x 1/4" Bridging Angles with C32 Trusses at Interior Panel Points	CD 220
2-X	Standard Connection of 3" x 2" x 1/4" Bridging Angles with Extended End 32" Truss at Panel Joints	CD 211
2-XC	Connection of 3" x 2" x 1/4" Bridging Angles with C32 Trusses at Panel Joints (Except Special Cases 2-X, 13XC, 14XC and 15XC)	CD 220
3-XA	Connection of A35 and AA21 with a 32T22 in F2 and FR2 Panels	CD 218
3-XB	Connection of AA22 and AA23 with a C32T22 in F2 and FR2 Panels	CD 217
3-XC	Connection of AA9 Bridging Angles with C32T22 in F2 and FR2 Panels	CD 223
4-X	Connection of Interior Bridging Trusses with Extended End 32" Floor Trusses in Panels A2, B2, BR2, B7, BR7, C2, CR2, D2, DR2, D7, DR7, E2 and ER2	CD 215
4-XA	Connection of Interior Bridging Trusses with C32T21 in Panels F2 and FR2	CD 216
4-XCA	Connection of 24T Bridging Trusses with C32 Trusses at Interior Panel Points (Panels A, B, BR C and CR)	CD 220
4-XCB	Connection of 24T Bridging Trusses with C32 Trusses at Interior Panel Points (Panels G2, GR2, H2, H7, HR7, HR2, J2)	CD 220
5-X	Connection of 24T14A Bridging Trusses with C32T22 Trusses at Interior Panel Points (Panels F2 and FR2)	CD 216
5-XC	Connection of 24T Bridging Trusses with C32 Trusses at Interior Panel Points (Panels D, DR, E, ER, F, FR, G and GR except 5-X, 6-X, 6-XA Connections in Panel F and FR)	CD 220
6-X	Connection of Interior Bridging Trusses 24T7C or 24T7E with C32T22	CD 219
6-XA	Connection of 24T7D Bridging Trusses with C32T22 at Interior Panel Points	CD 219
7-X	Connection of the following Bridging Trusses at Panel Joints: 24T14A to 2415A, or 24T11B to 24T13D, 13, 16B or 16C	CD 212
7-XC	Connection of 24T Bridging Trusses with C32 Trusses at Panel Joints except Special Cases 8-XC, 9-XC, 10-XC, 11-XC.	CD 220
8-XC	Connections of the following Bridging Trusses at Panel Joints: 24T8 to 24T10 or 24T10C 24T8A to 24T10A or 24T10D 24T8B to 24T10B or 24T10E	CD 221
9-X	Connection of 24T13D Bridging Trusses with 24T11B Bridging Truss at a Panel Joint	CD 213
9-XC	Connections of the following Bridging Trusses at Panel Joints: 24T9 to 24T11A, or 249A to 2411C	CD 222
10-XC	Connections of the following Bridging Trusses at Panel Joints 24T8 to 24T7C 24T8A to 24T7D 24T8B to 24T7E	CD 221
11-X	Connection of the 24T15A Bridging Trusses at a 24T16B or 16C at a Panel Joint	CD 214
11-XC	Connection of 24T12 Bridging Truss with the 24T10, 10A, 10B, 10D, or 10E Bridging at Panel Joints (10C)	CD 223
12-XC	Reserved	
13-XC	Connection of 3" x 2" x 1/4" Bridging Angle at Double C32T26 Trusses with Double C32T18 Trusses	CD 228
14-XC	Connection of 3" x 2" x 1/4" Bridging Angle at Double C32T26 Trusses Double C32T20 Trusses	CD 226
15-X	Connection of 3" x 2" x 1/4" Bridging Angle at Double C32T26 with a C32T22	CD 210
16-XC	Connection of 24T9 Bridging Truss at Double C32T26 Trusses with Double C32T19 Trusses	CD 227
17-XC	Connection of 24T9A Bridging Truss at Double C32T26 Trusses with Double C32T21 Trusses	CD 225
18-XC	Connection of 3" x 2" x 1/4" Bridging Angle with the Double C32T18 Trusses in Panel E and ER at Second Line of Bridging from Core End	CD 223
19-XC	Connection of 3" x 2" x 1/4" Bridging Angle with the Double C32T15 Trusses at the Panel Joint of Panels E to Panel D or Panel ER to Panel DR at Second Line of Bridging from Core End	CD 223

SKILLING-HELLE CHRISTIANSEN-ROBERTSON
Structural & Civil Engineers
☐ APPROVED
☒ APPROVED AS NOTED
☐ RESUBMIT
☐ REJECTED
Date 2/25/69 By SK

CONNECTION DETAILS
FOR
WORLD TRADE CENTER - N.Y.C.
FOR
THE PORT OF NEW YORK AUTHORITY

STANDARD CONNECTION DETAILS 1-X & 2-X

FABRICATION BY: LACLEDE STEEL COMPANY			
FABRICATED AT MADISON, ILLINOIS		DESIGN DRAWING NO.	PLATE
APPROVED FOR FABRICATION BY: FOR P.O.N.Y.A.	DATE	DRAWN BY: gdc DATE OCT. 3, 1968	
APPROVED FOR FABRICATION BY: FOR FABRICATOR	DATE	CHECKED BY: T.M.CHURA DATE OCT. 8, 1968	IN CHARGE OF PROD. DEV.
LACLEDE STEEL CO. DETAILED BY: A. CARL WEBER		FABRICATION CONT. NO. W.T.C. 221	SHEET NO. CD 211

NO.	DATE	REVISION	BY
1	2-5-69	AS NOTED	G.D.C.

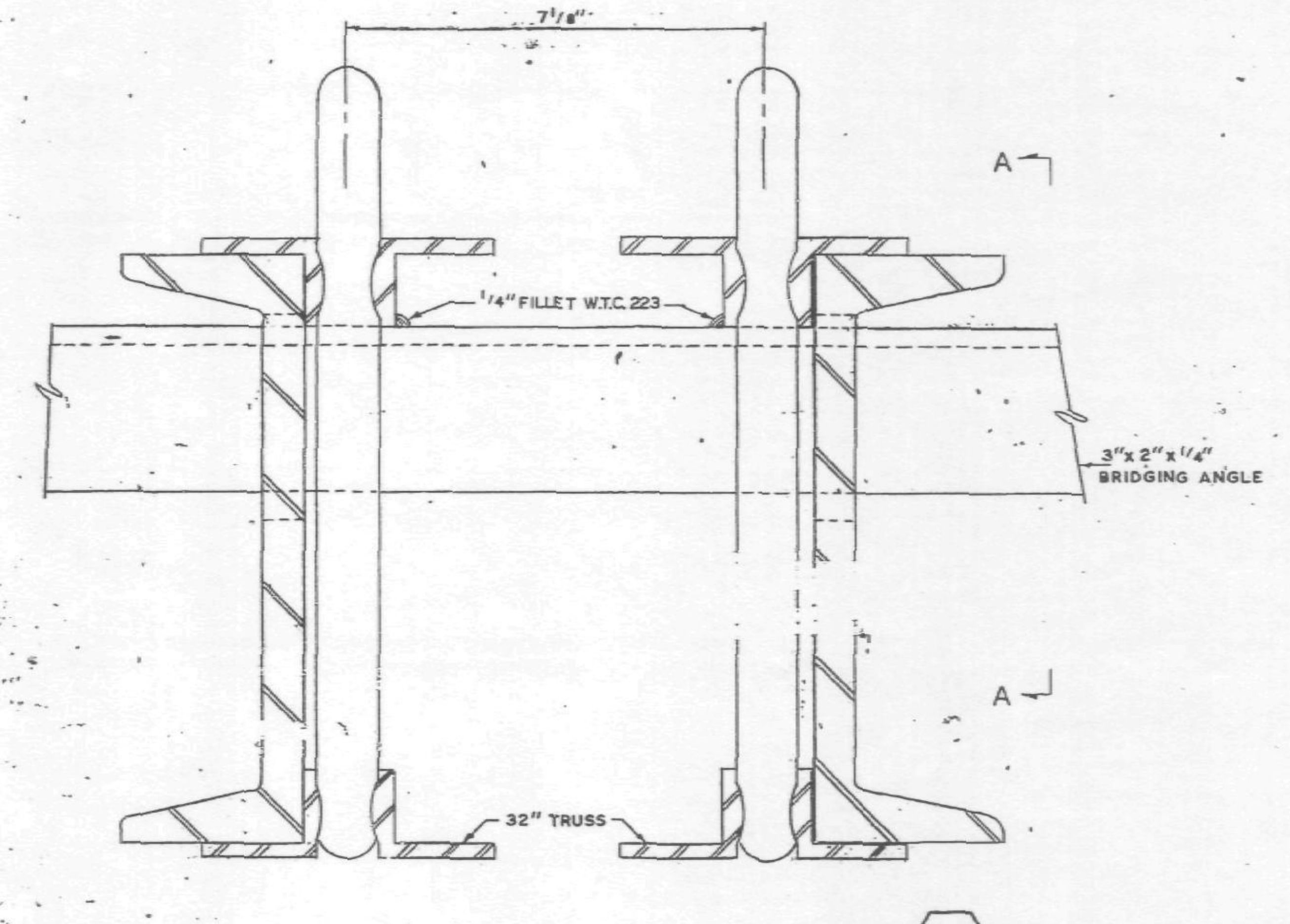

INTERIOR BRIDGING ANGLE CONNECTION (1-X)

PANELS: A2, B2, BR2, C2, CR2, D2, DR2, E2, ER2, F2 & FR2

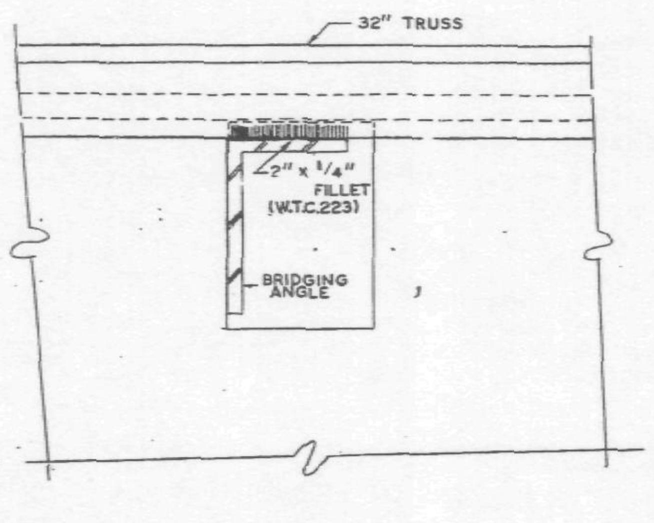

SECTION A-A

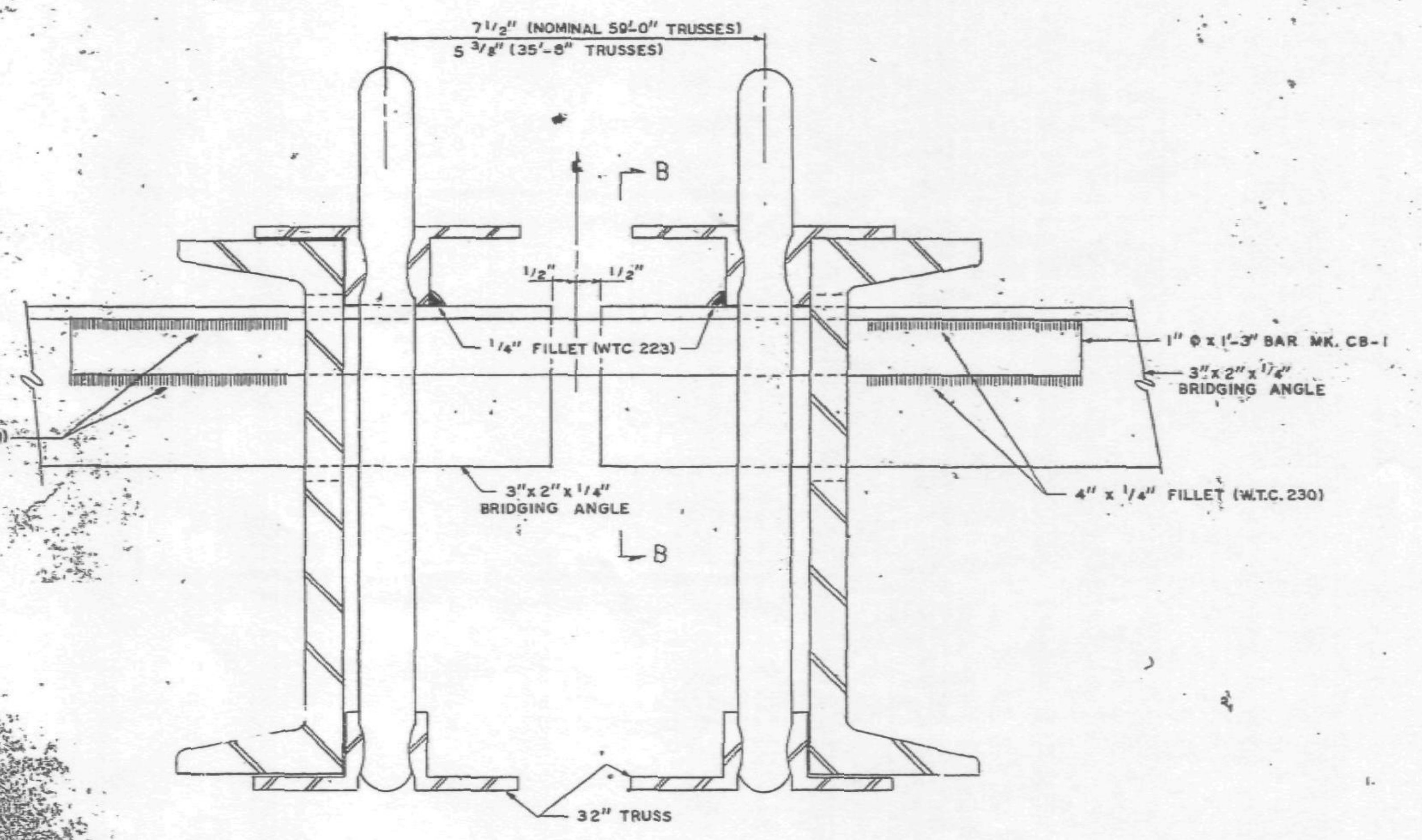

PANEL JOINT BRIDGING ANGLE CONNECTION (2-X)

PANELS: A2, B2, BR2, C2, CR2, D2, DR2, E2, ER2, F2, FR2, G2, GR2, H7, HR2 & J2.

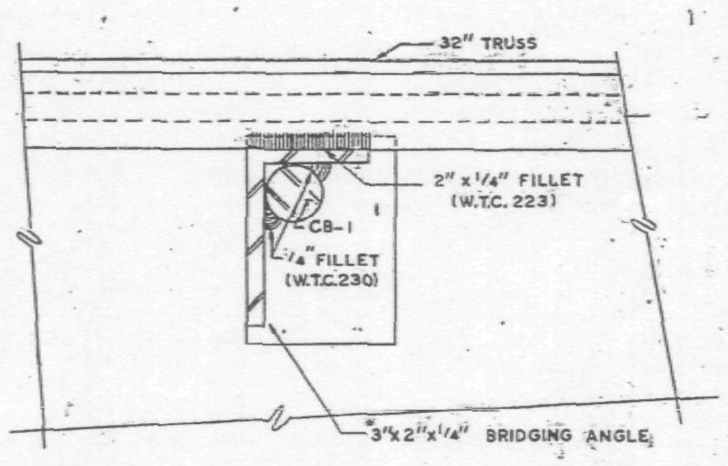

SECTION B-B

LIST OF FLOOR CONNECTION INDENTIFICATIONS FOR FLOORS 25, 59, & 92

TOWERS A & B

Connection Designation		Drawing No.
1-X	Connection of 3" x 2" x 1/4" Bridging Angles with Extended End 32" Truss in Panels A2, B2, BR2, C2, CR2, D2, DR2, E2, ER2, F2 and FR2	CD 211
1-XA	Connection of 3" x 2" x 1/4" Bridging Angles with Extended End 32" Truss in Panels G2, GR2, H7, HR2 and J2	CD 217
1-XC	Connection of 3" x 2" x 1/4" Bridging Angles with C32 Trusses at Interior Panel oints	CD 220
2-X	Standard Connection of 3" x 2" x 1/4" Bridging Angles with Extended End 32" Truss at Panel Joints	CD 211
2-XC	Connection of 3" x 2" x 1/4" Bridging Angles with C32 Trusses at Panel Joints (Except Special Cases 2-X, 13XC, 14XC and 15XC)	CD 220
3-XA	Connection of A35 and AA21 with a 32T22 in F2 and FR2 Panels	CD 218
3-XB	Connection of AA22 and AA23 with a C32T22 in F2 and FR2 Panels	CD 217
3-XC	Connection of AA9 Bridging Angles with C32T22 in F2 and FR2 Panels	CD 223
4-X	Connection of Interior Bridging Trusses with Extended End 32" Floor Trusses in Panels A2, B2, BR2, B7, BR7, C2, CR2, D2, DR2, D7, DR7, E2 and ER2	CD 215
4-XA	Connection of Interior Bridging Trusses with C32T21 in Panels F2 and FR2	CD 216
4-XCA	Connection of 24T Bridging Trusses with C32 Trusses at Interior Panel Joints (Panels A, B, BR C and CR)	CD 220
4-XCB	Connection of 24T Bridging Trusses with C32 Trusses at Interior Panel Points (Panels G2, GR2, H2, H7, HR7, HR2, J2)	CD 220
5-X	Connection of 24T14A Bridging Trusses with C32T22 Trusses at Interior Panel Points (Panels F2 and FR2)	CD 218
5-XC	Connection of 24T Bridging Trusses with C32 Trusses at Interior Panel Points (Panels D, DR, E, ER, F, FR, G and GR except 5-X, 6-X, 6-XA Connections in Panel F and FR)	CD 220
6-X	Connection of Interior Bridging Trusses 24T7C or 24T7E with C32T22	CD 219
6-XA	Connection of 24T7D Bridging Trusses with C32T22 at Interior Panel Points	CD 219
7-X	Connection of the following Bridging Trusses at Panel Joints: 24T14A to 2415A, or 24T11B to 24T13D, 13, 16B or 16C	CD 212
7-XC	Connection of 24T Bridging Trusses with C32 Trusses at Panel Joints except Special Cases 8-XC, 9-XC, 10-XC, 11-XC.	CD 220
8-XC	Connections of the following Bridging Trusses at Panel Joints: 24T8 to 24T10 or 24T10C; 24T8A to 24T10A or 24T10D; 24T6B to 24T10B or 24T10E	CD 221
9-X	Connection of 24T13D Bridging Trusses with 24T11B Bridging Truss at a Panel Joint	CD 213
9-XC	Connections of the following Bridging Trusses at Panel Joints: 24T9 to 24T11A, or 249A to 2411C	CD 222
10-XC	Connections of the following Bridging Trusses at Panel Joints 24T8 to 24T7C; 24T8A to 24T7D; 24T8 to 24T7E	CD 221
11-X	Connection of the 24T15A Bridging Trusses at a 24T16B or 16C at a Panel Joint	CD 214
11-XC	Connection of 24T12 Bridging Truss with the 24T10, 10A, 10B, 10D, or 10E Bridging at Panel Joints	CD 223
12-XC	Reserved	
13-XC	Connection of 3" x 2" x 1/4" Bridging Angle at Double C32T26 Trusses with Double C32T18 Trusses	CD 228
14-XC	Connection of 3" x 2" x 1/4" Bridging Angle at Double C32T26 Trusses Double C32T20 Trusses	CD 226
15-X	Connection of 3" x 2" x 1/4" Bridging Angle at Double C32T26 with a C32T22	CD 210
16-XC	Connection of 24T9 Bridging Truss at Double C32T26 Trusses with Double C32T19 Trusses	CD 227
17-XC	Connection of 24T9A Bridging Truss at Double C32T[illegible] Trusses with Double C32T21 Trusses	CD 225
18-XC	Connection of 3" x 2" x 1/4" Bridging Angle with the Double C32T18 Trusses in Panel E and ER at Second Line of Bridging from Core End	CD 223
19-XC	Connection of 3" x 2" x 1/4" Bridging Angle with the Double C32T15 Trusses at the Panel Joint of Panels E to Panel D or Panel ER to Panel DR at Second Line of Bridging from Core End	CD 223

CONNECTION DETAILS
FOR
WORLD TRADE CENTER - N.Y.C.
FOR
THE PORT OF NEW YORK AUTHORITY

STANDARD CONNECTION DETAILS 1-X & 2-X

FABRICATION BY: LACLEDE STEEL COMPANY

FABRICATED AT MADISON, ILLINOIS		DESIGN DRAWING NO.	PLATE
APPROVED FOR FABRICATION BY: James White FOR P.O.N.Y.A.	DATE 1/31/69	DRAWN BY: gdc DATE OCT. 8, 1968	
APPROVED FOR FABRICATION BY: FOR FABRICATOR LACLEDE STEEL CO.	DATE	CHECKED BY: T.M.CHURA DATE OCT. 8, 1968	IN CHARGE OF PROD. DEV.
DETAILED BY: A. CARL WEBER		FABRICATION CONT. NO. W.T.C. 221	SHEET NO. CD 211

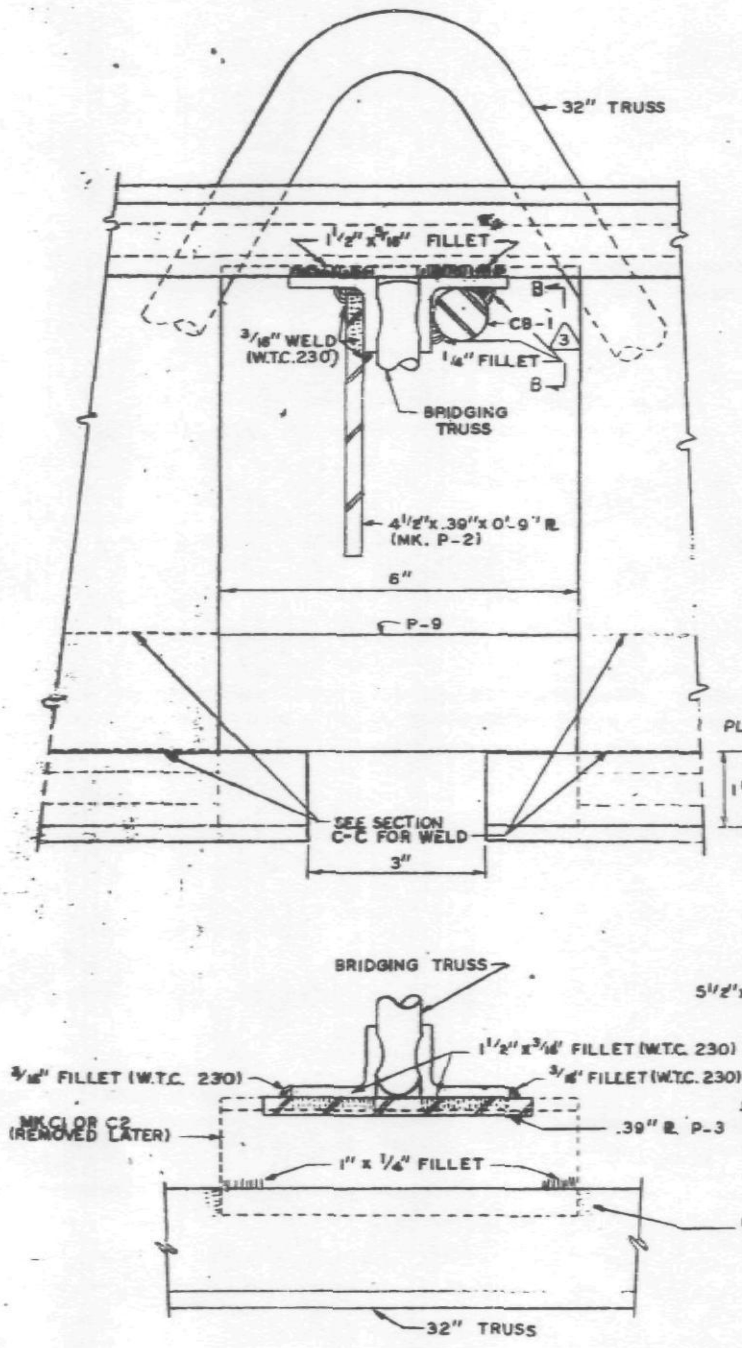

SECTION A-A

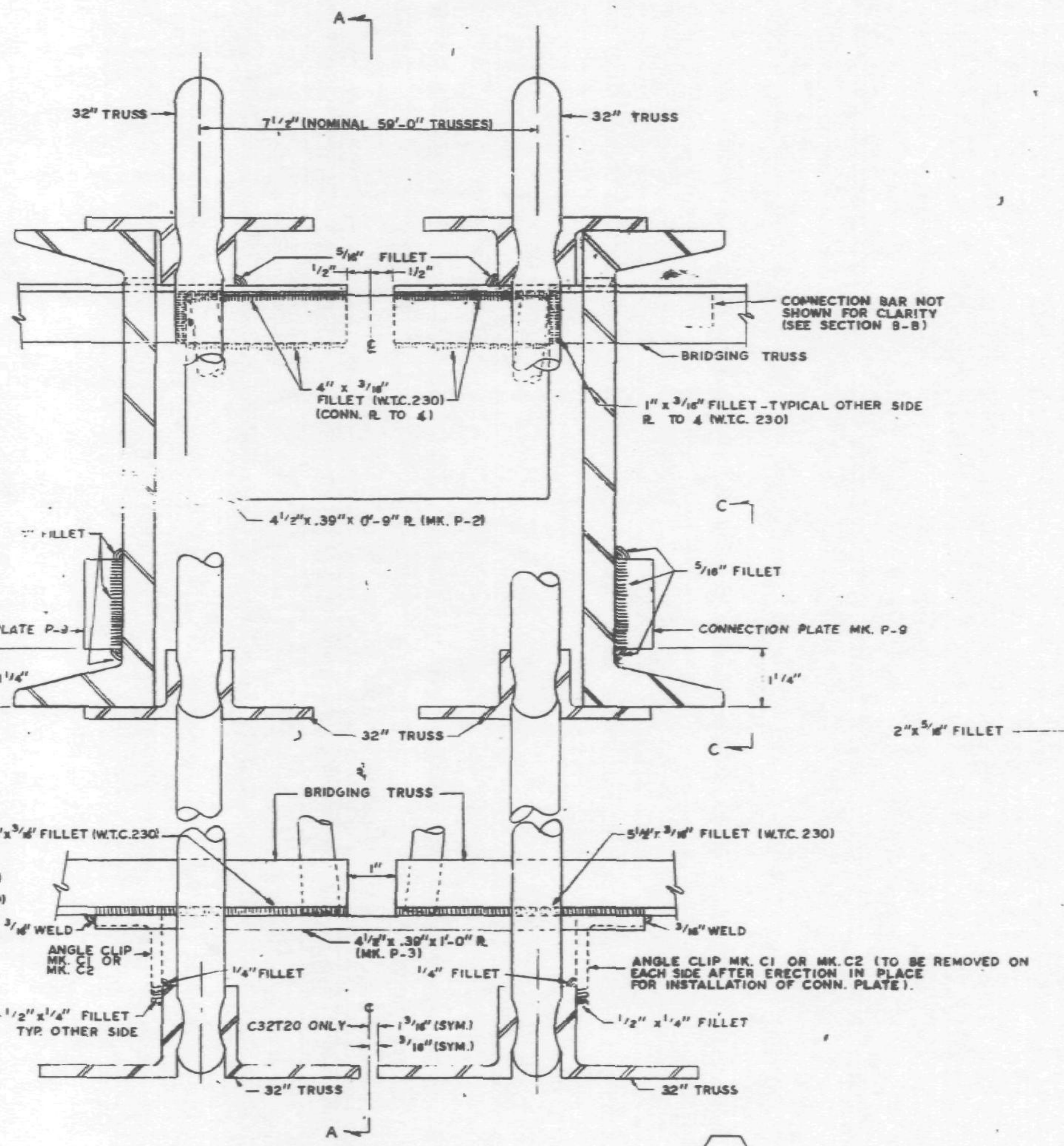

PANEL JOINT BRIDGING TRUSS CONNECTION (7-X)

24T14A TO 24T15A
24T11B TO 24T13D
24T11B TO 24T13
24T11B TO 24T16B
24T11B TO 24T16C

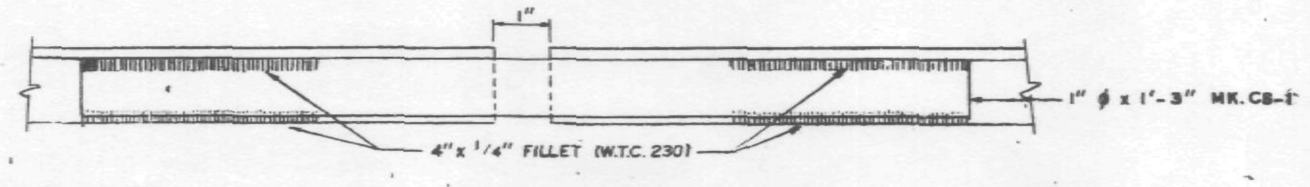

SECTION B-B

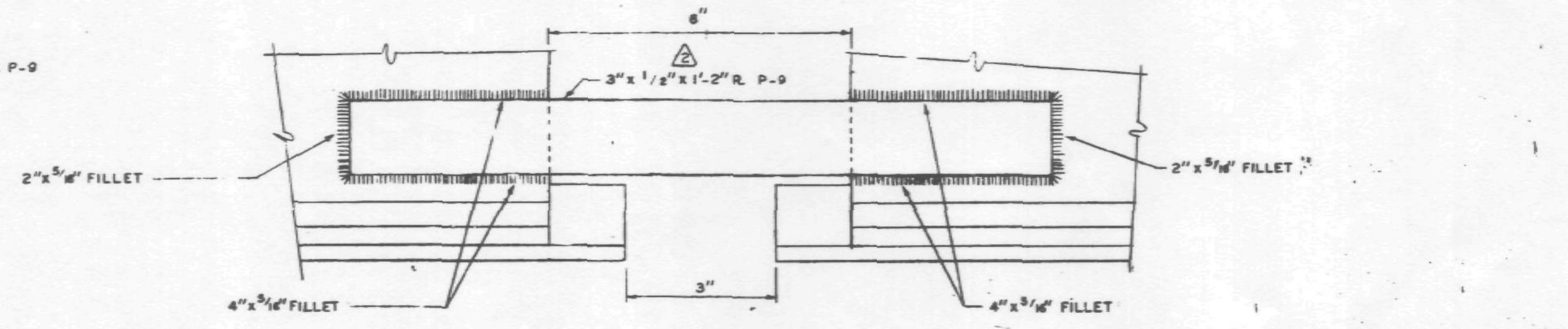

SECTION C-C

UNLESS OTHERWISE NOTED ALL ARC WELDS BY W.T.C. 223.
ALL ARC WELDS TO BE MADE WITH LOW HYDROGEN RODS IN THE E-70 SERIES OR EQUAL.
ALL PLATES & ℄ SPLICE BARS TO BE ASTM A36 STEEL.
SEE SHEET CD-211 FOR FLOOR CONNECTION IDENTIFICATION LIST FOR FLOORS 25, 59 & 92.

NO.	DATE	REVISION	BY
3	1-9-68	AS NOTED	G.D.C.
2	11-6-68	P-9 PL SIZE	G.D.C.
1	10-22-68	GENERAL	G.D.C.

CONNECTION DETAILS
FOR
WORLD TRADE CENTER - N.Y.C.
FOR
THE PORT OF NEW YORK AUTHORITY

SPECIAL CONNECTION 7-X FOR FLOORS 25, 59 & 92.

FABRICATION BY: LACLEDE STEEL COMPANY

FABRICATED AT MADISON, ILLINOIS		DESIGN DRAWING NO.	PLATE
APPROVED FOR FABRICATION BY: James White FOR P.O.N.Y.A.	DATE 1/31/69	DRAWN BY: gdc DATE OCT. 10, 1968	
APPROVED FOR FABRICATION BY: FOR FABRICATOR	DATE	CHECKED BY: T.M.CHURA DATE OCT. 10, 1968	IN CHARGE OF PROD. DEV.
DETAILED BY: R. CARL WEBER		FABRICATION CONT. NO. W.T.C. 221	SHEET NO. CD 212

LACLEDE STEEL CO.

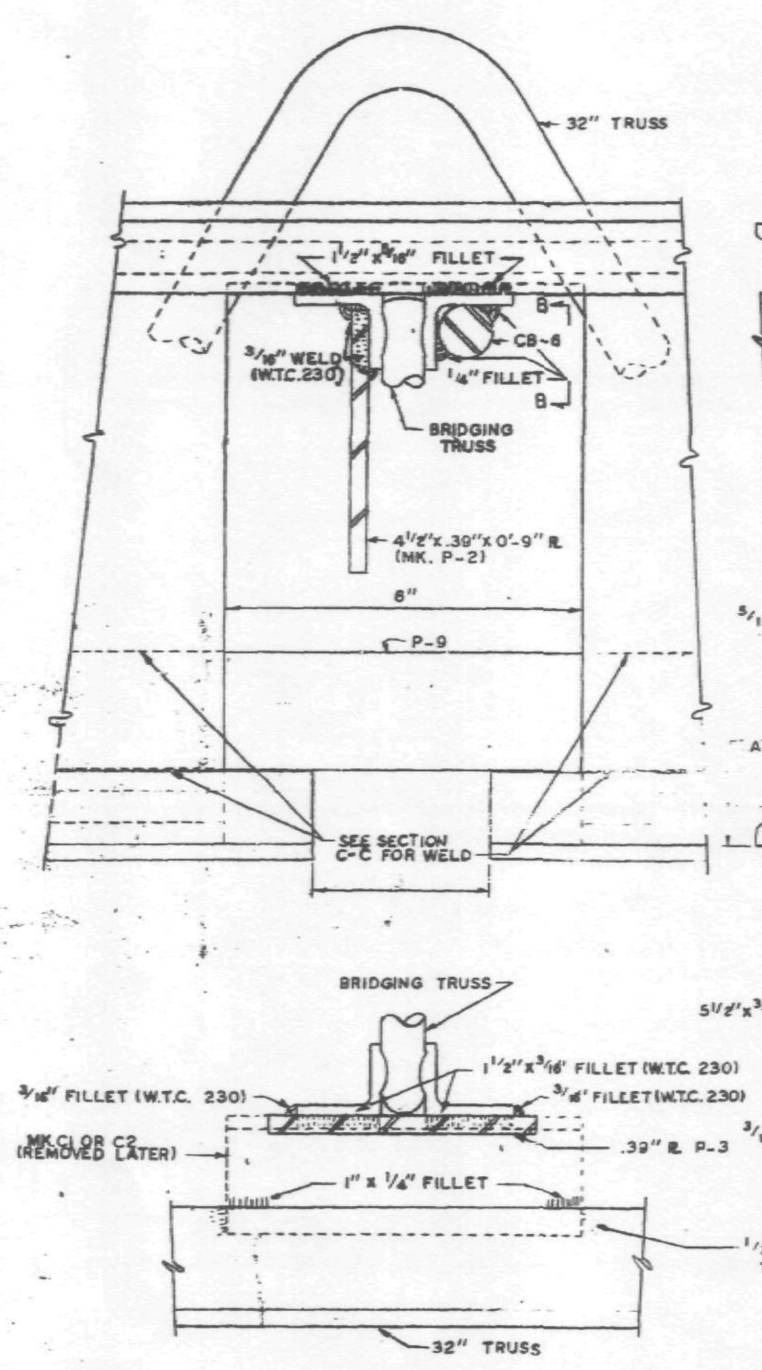

SECTION A-A

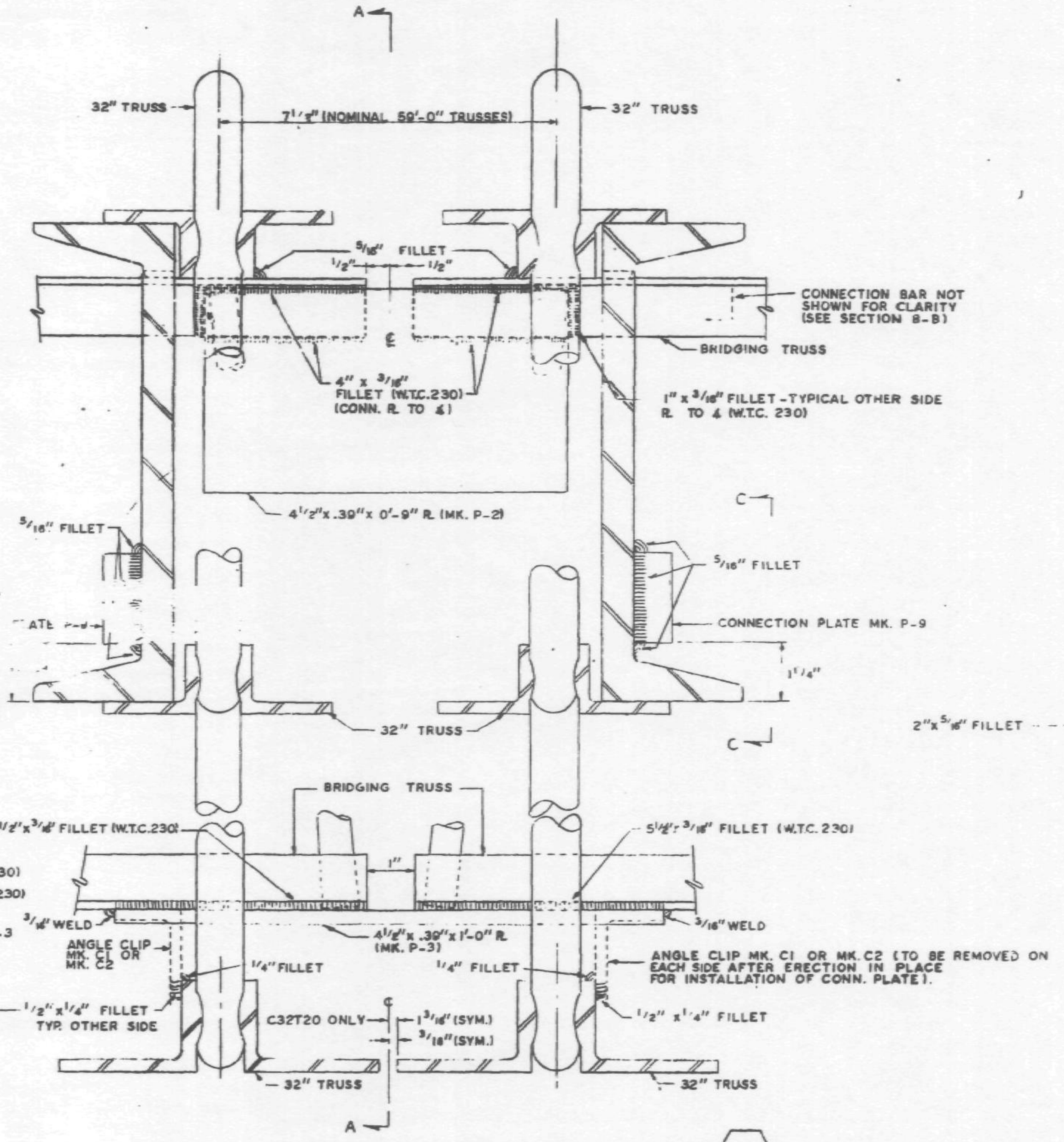

PANEL JOINT BRIDGING TRUSS CONNECTION (7-X)

24T14A TO 24T15A
24T118 TO 24T130
24T118 TO 24T13
24T119 TO 24T16B
24T119 TO 24T16C

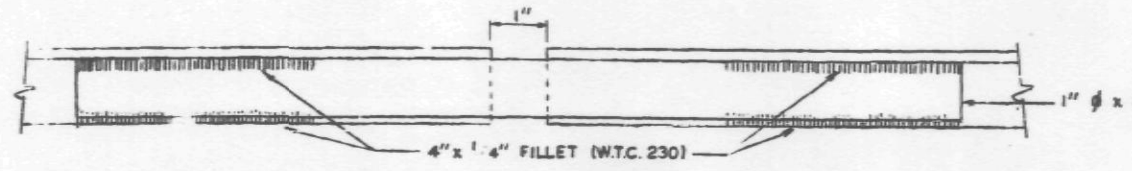

SECTION B-B

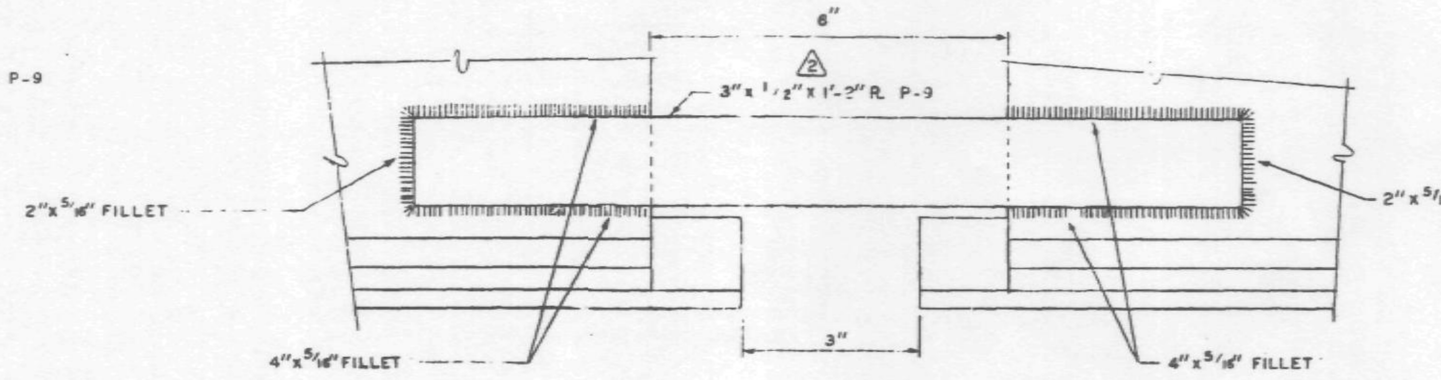

SECTION C-C

UNLESS OTHERWISE NOTED ALL ARC WELDS BY W.T.C. 223.
ALL ARC WELDS TO BE MADE WITH LOW HYDROGEN RODS IN THE E-70 SERIES OR EQUAL.
ALL PLATES & ø SPLICE BARS TO BE ASTM A36 STEEL.
SEE SHEET CD-211 FOR FLOOR CONNECTION IDENTIFICATION LIST FOR FLOORS 25, 59 & 92.

NO.	DATE	REVISION	BY
2	11-6-68	P-9 R SIZE	G.D.C.
1	10-22-68	GENERAL	G.D.C.

CONNECTION DETAILS
FOR
WORLD TRADE CENTER - N.Y.C.
FOR
THE PORT OF NEW YORK AUTHORITY

SPECIAL CONNECTION 7-X FOR FLOORS 25, 59 & 92.

FABRICATION BY: LACLEDE STEEL COMPANY

FABRICATED AT MADISON, ILLINOIS		DESIGN DRAWING NO.	PLATE
APPROVED FOR FABRICATION BY James White FOR P.O.N.Y.A.	DATE 11/15/68	DRAWN BY: gd DATE OCT. 10, 1968	
APPROVED FOR FABRICATION BY ______ FOR FABRICATOR	DATE	CHECKED BY: T.M. CHURA DATE OCT. 10, 1968	[illegible]
DETAILED BY: A. CARL WEBER (LACLEDE STEEL CO)		FABRICATION CONT. NO. W.T.C. 221	CD 212

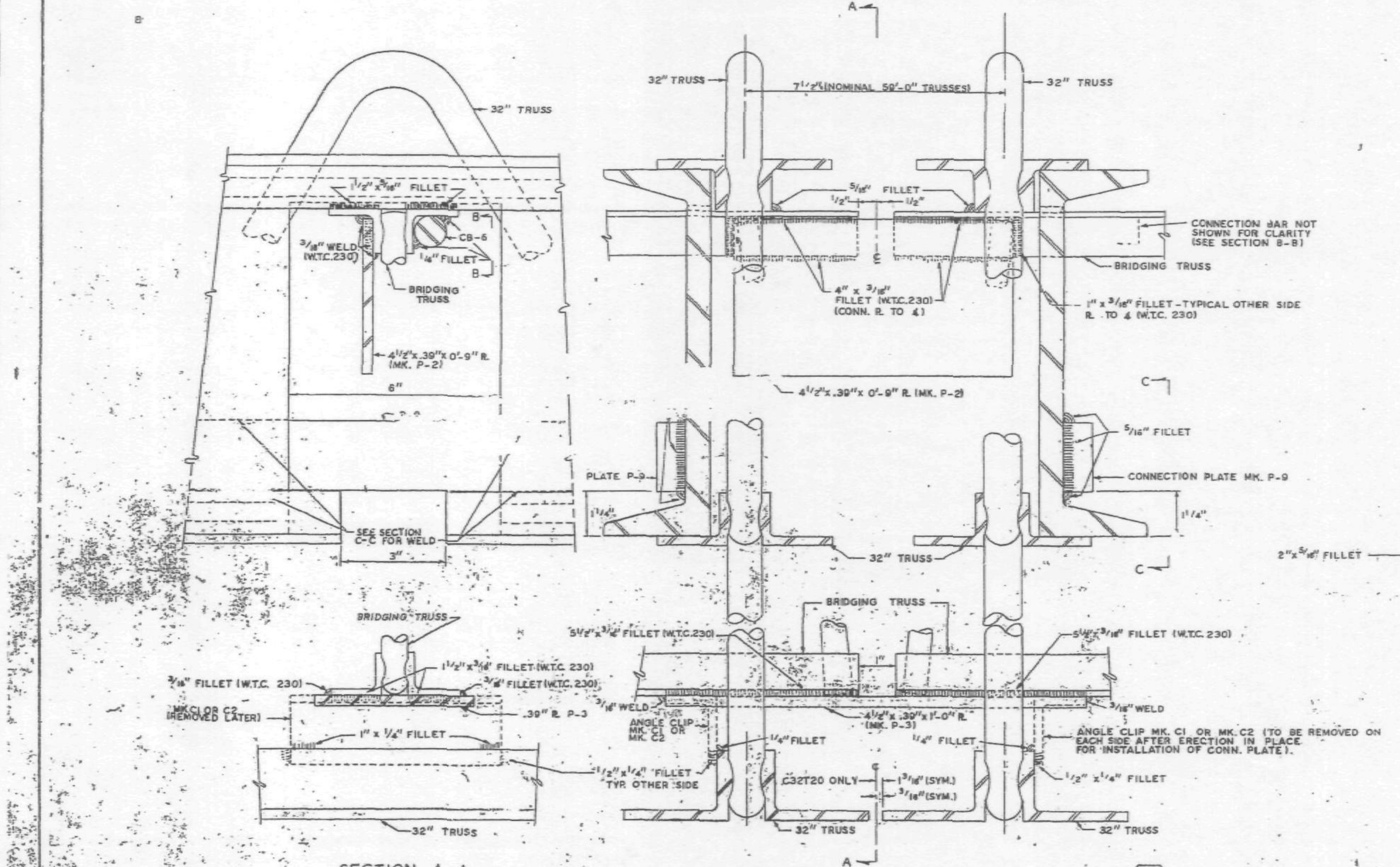

SECTION A-A

PANEL JOINT BRIDGING TRUSS CONNECTION (7-X)

24T14A TO 24T15A
24T11B TO 24T130
24T11B TO 24T13
24T11B TO 24T16B
24T11B TO 24T16C

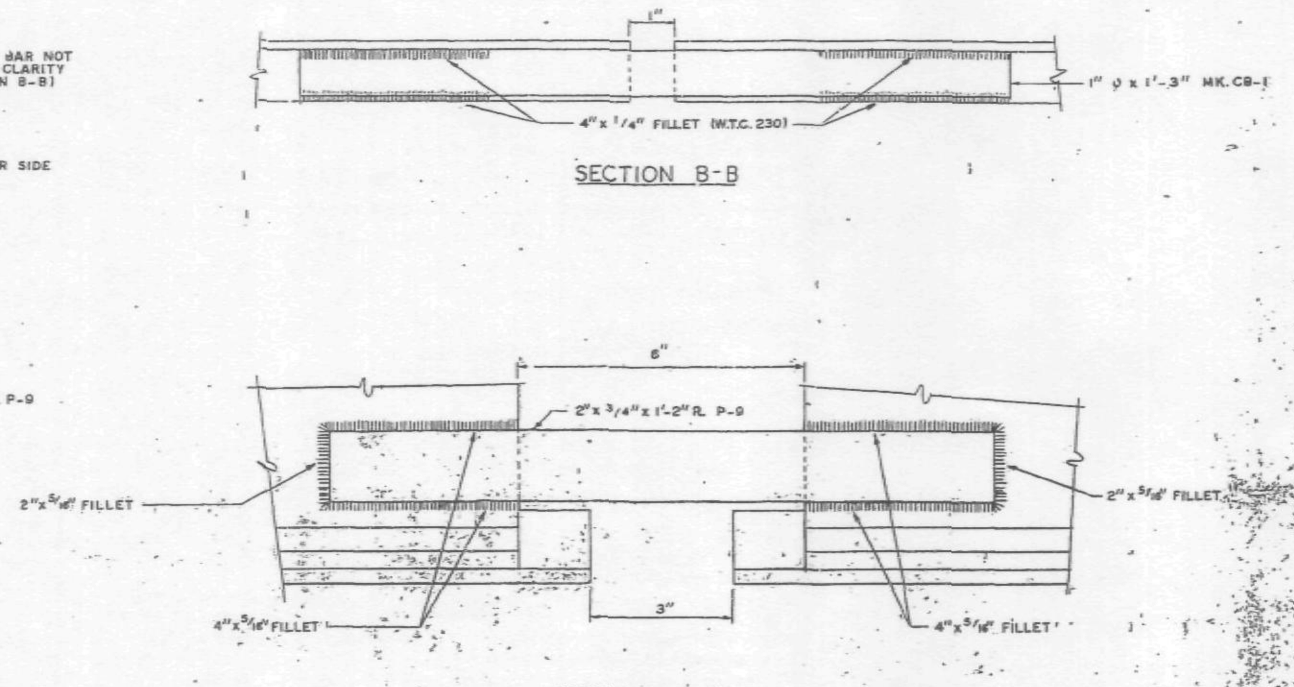

SECTION B-B

SECTION C-C

UNLESS OTHERWISE NOTED ALL ARC WELDS BY W.T.C. 223.
ALL ARC WELDS TO BE MADE WITH LOW HYDROGEN RODS IN THE E-70 SERIES OR EQUAL.
ALL PLATES & Ø SPLICE BARS TO BE ASTM A36 STEEL.
SEE SHEET CD-211 FOR FLOOR CONNECTION IDENTIFICATION LIST FOR FLOORS 25, 59 & 92.

CONNECTION DETAILS
FOR
WORLD TRADE CENTER - N.Y.C.
FOR
THE PORT OF NEW YORK AUTHORITY

SPECIAL CONNECTION 7-X FOR FLOORS 25, 59 & 92.

FABRICATION BY: LACLEDE STEEL COMPANY

FABRICATED AT MADISON, ILLINOIS	DESIGN DRAWING NO.	PLATE
APPROVED FOR FABRICATION BY: White FOR P.O.N.Y.A. DATE 10/30/68	DRAWN BY: DATE OCT. 10, 1968	
APPROVED FOR FABRICATION BY: FOR FABRICATOR DATE	CHECKED BY: T.M.CHURA DATE OCT. 10, 1968	IN CHARGE OF PROD. DEV.
DETAILED BY: A. CARL WEBER	FABRICATION CONT. NO. W.T.C. 221	SHEET NO. CD 212

NO.	DATE	REVISION	BY
1	10-22-68	GENERAL	G.D.C.

THIS WOULD BE A DESIRABLE WELD - Can it be made?

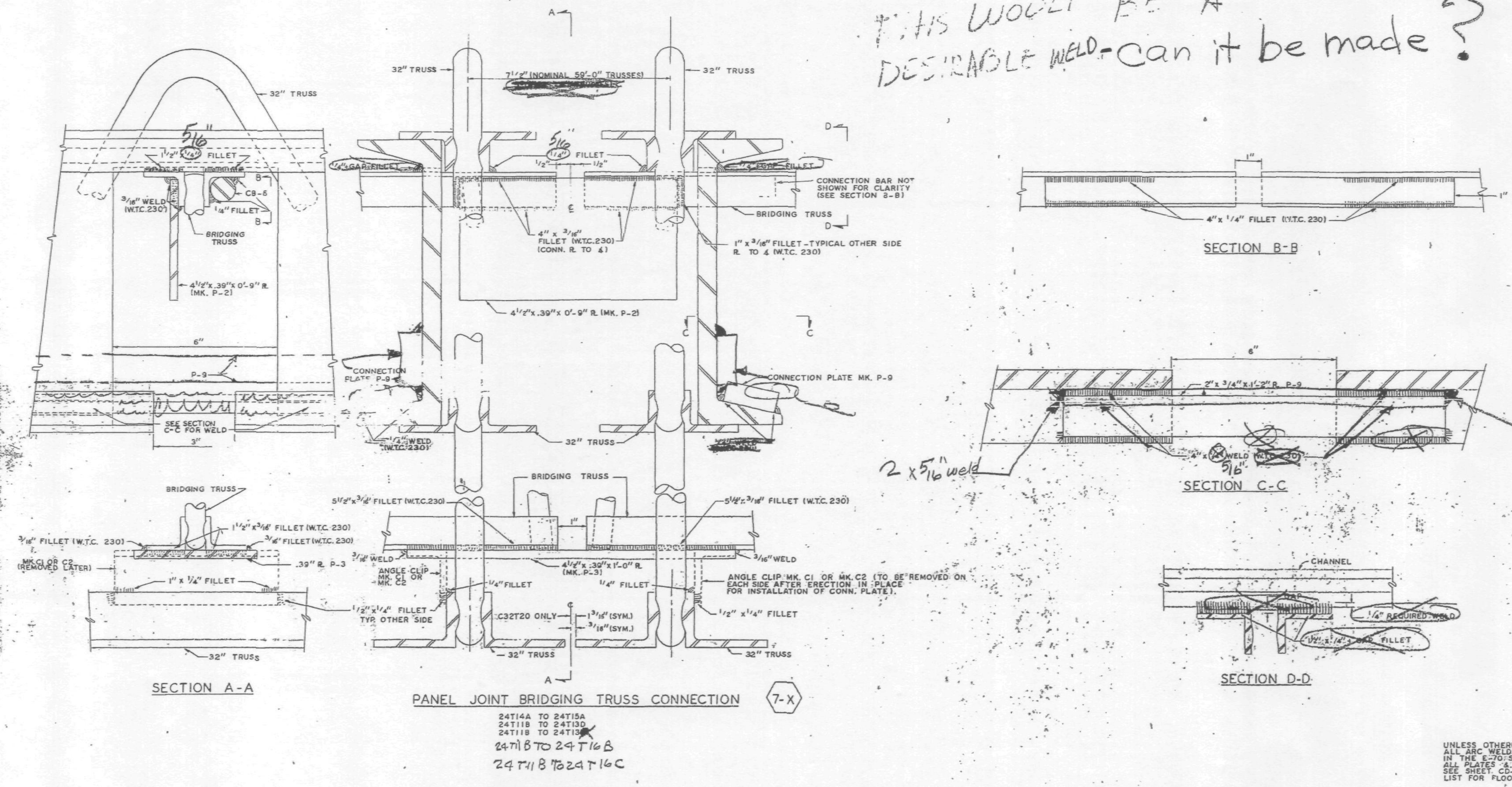

UNLESS OTHERWISE NOTED ALL ARC WELDS BY W.T.C. 223.
ALL ARC WELDS TO BE MADE WITH LOW HYDROGEN RODS IN THE E-70 SERIES OR EQUAL.
ALL PLATES & ℄ SPLICE BARS TO BE ASTM A36 STEEL.
SEE SHEET CD-211 FOR FLOOR CONNECTION IDENTIFICATION LIST FOR FLOORS 25, 59 & 92.

SKILLING - HELLE
CHRISTIANSEN - ROBERTSON
Structural & Civil Engineers
☐ APPROVED
☒ APPROVED AS NOTED
☐ RESUBMIT
☐ REJECTED
Date 10/18/68 By SK

CONNECTION DETAILS
FOR
WORLD TRADE CENTER - N.Y.C.
FOR
THE PORT OF NEW YORK AUTHORITY

SPECIAL CONNECTION 7-X FOR FLOORS 25, 59 & 92.

FABRICATION BY: LACLEDE STEEL COMPANY

FABRICATED AT MADISON, ILLINOIS		DESIGN DRAWING NO.	PLAN
APPROVED FOR FABRICATION BY: FOR P.O.N.Y.A.	DATE	DRAWN BY gdc DATE OCT. 10, 1968	
APPROVED FOR FABRICATION BY: FOR FABRICATOR	DATE	CHECKED BY: T.M. CHURA DATE OCT. 10, 1968	IN CHARGE OF PROD. DEV.
LACLEDE STEEL CO. DETAILED BY: A. CARL WEBER		FABRICATION CONT. NO. W.T.C. 221	SHEET NO. CD 212

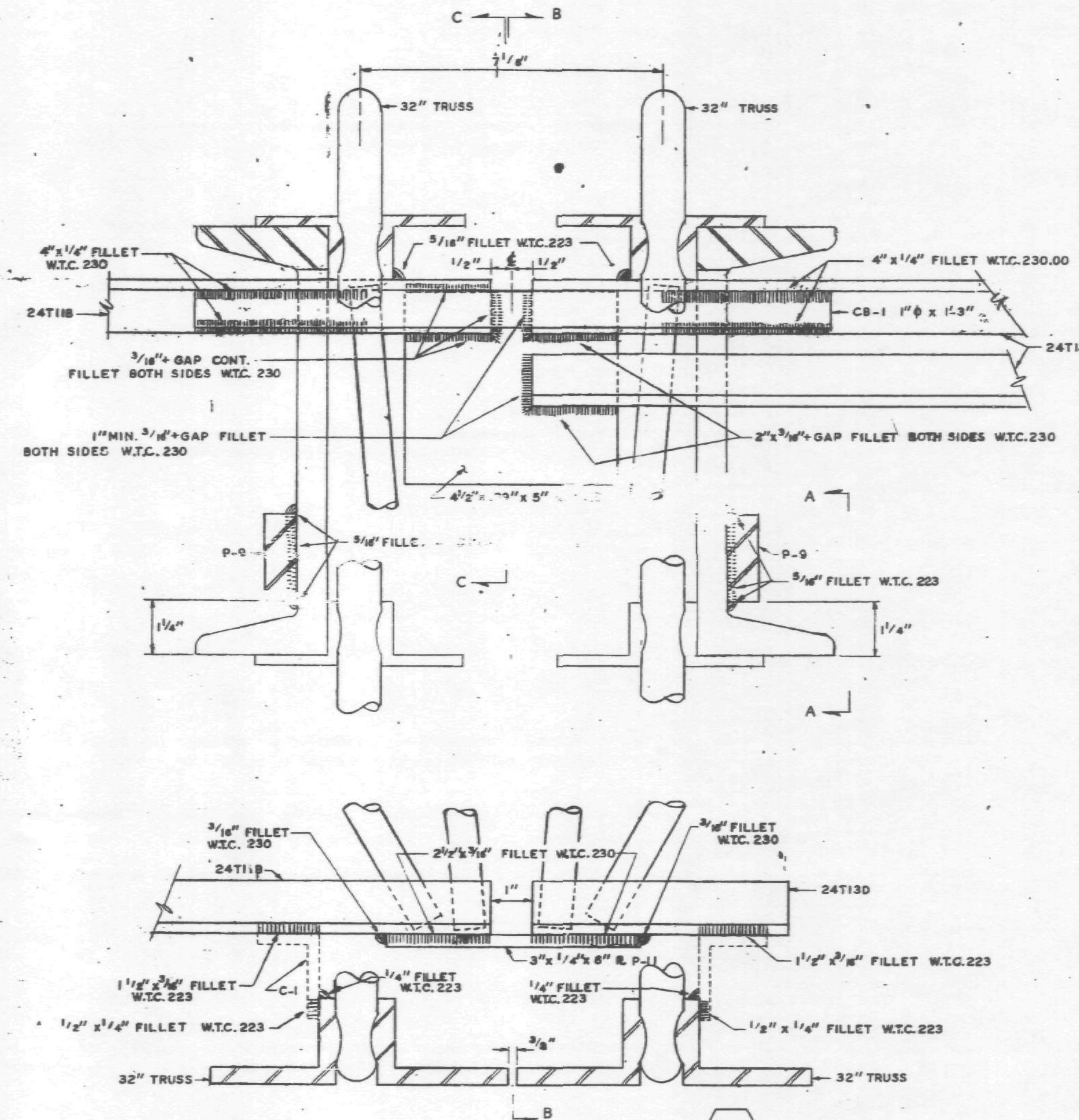

PANEL JOINT BRIDGING TRUSS CONNECTION (9-X)

24T13D TO 24T11B

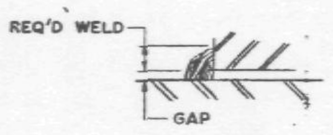

DETAIL "A"

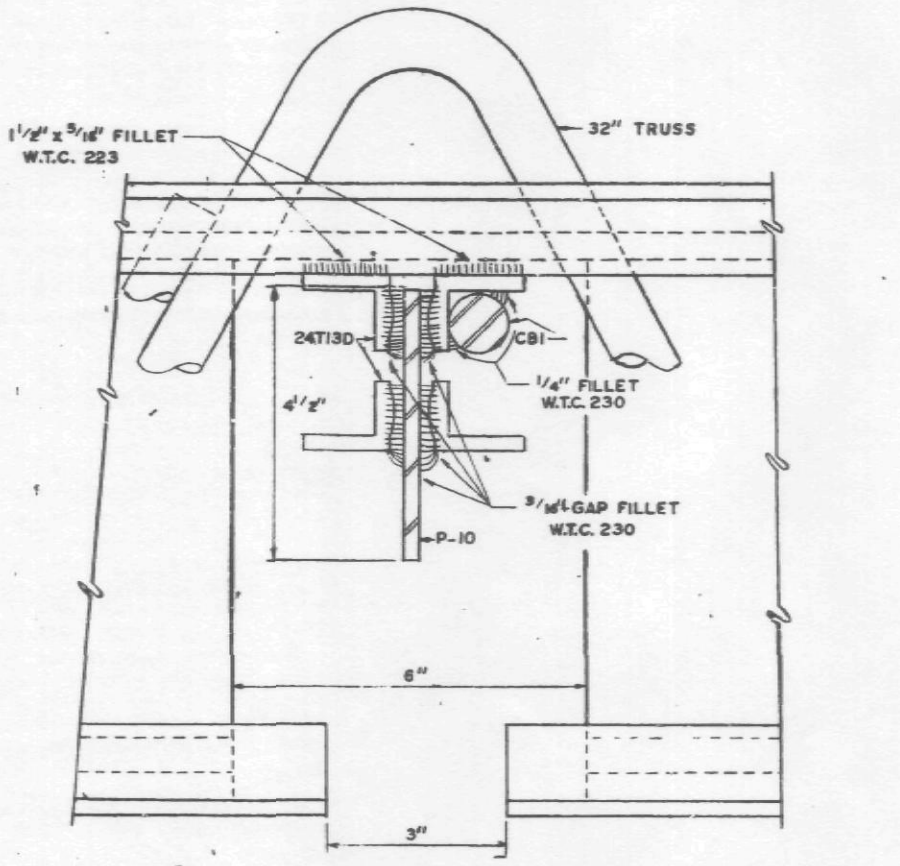

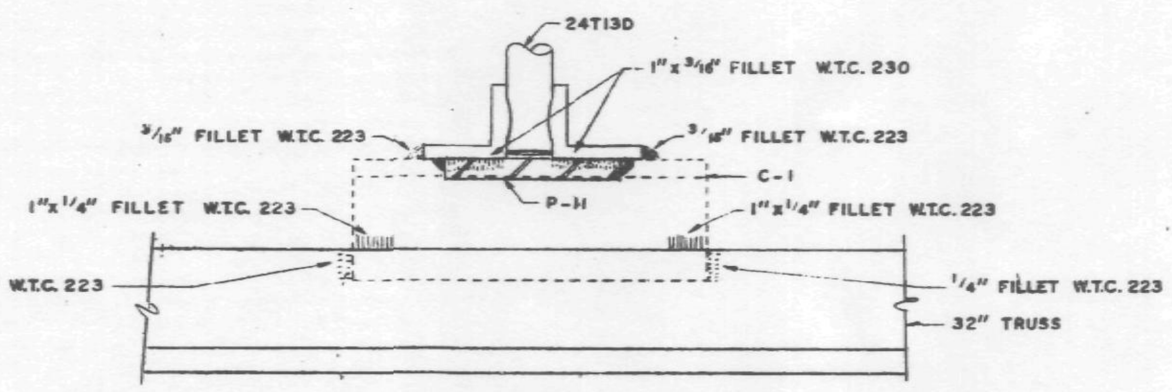

SECTION B-B

ALL ARC WELD TO BE MADE WITH LOW HYDROGEN RODS IN THE E-70 SERIES OR EQUAL.
ALL PLATES & φ SPLICE BARS TO BE A.S.T.M. A36 STEEL.
SEE DETAIL A (THIS SHEET) FOR ALL +GAP WELDS.
SEE SHEET CD 211 FOR CONNECTION IDENTIFICATION LIST FOR FLOORS 25, 59 & 92.

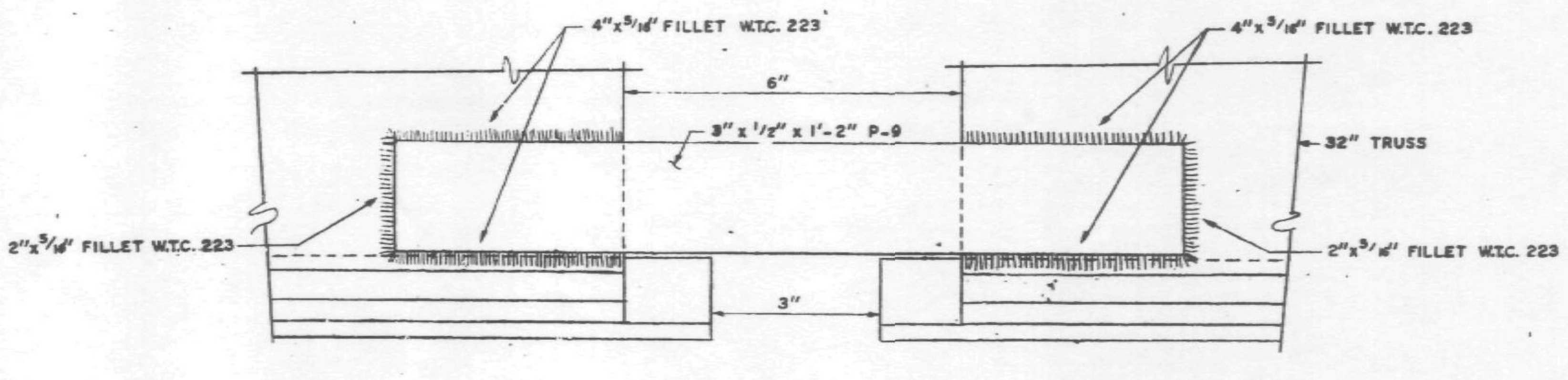

SECTION A-A

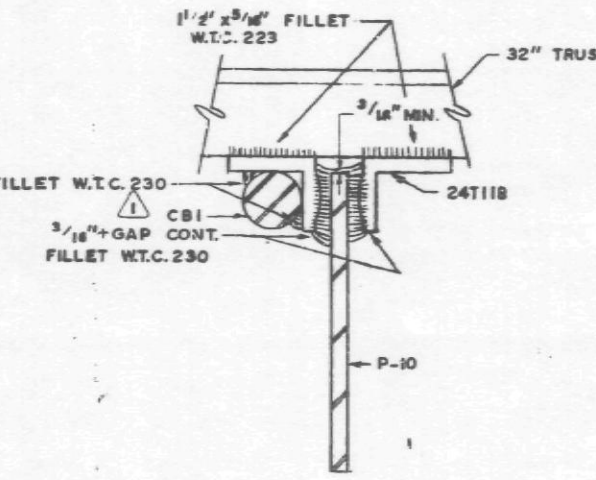

SECTION-C-C

CONNECTION DETAILS FOR WORLD TRADE CENTER – N.Y.C. FOR THE PORT OF NEW YORK AUTHORITY			
CONNECTION DETAIL 9-X FOR FLOORS 25, 59 & 92.			
WORLD TRADE CENTER TOWERS A & B			
FABRICATION BY: LACLEDE STEEL COMPANY			
FABRICATED AT MADISON, ILLINOIS		DESIGN DRAWING NO.	PLATE 1
APPROVED FOR FABRICATION BY FOR P.O.N.Y.A.	DATE 12/6/68	DRAWN BY: ajc DATE OCT. 24, 1968	
APPROVED FOR FABRICATION BY FOR FABRICATOR	DATE	CHECKED BY: T.M.CHURA DATE OCT. 24, 1968	IN CHARGE OF PROD. DEV.
LACLEDE STEEL CO. DETAILED BY: A. CARL WEBER		FABRICATION CONT. NO. W.T.C. 221	SHEET NO. CD 213

NO.	DATE	REVISION		BY
1	11-21-68	AS NOTED		G.D.C.

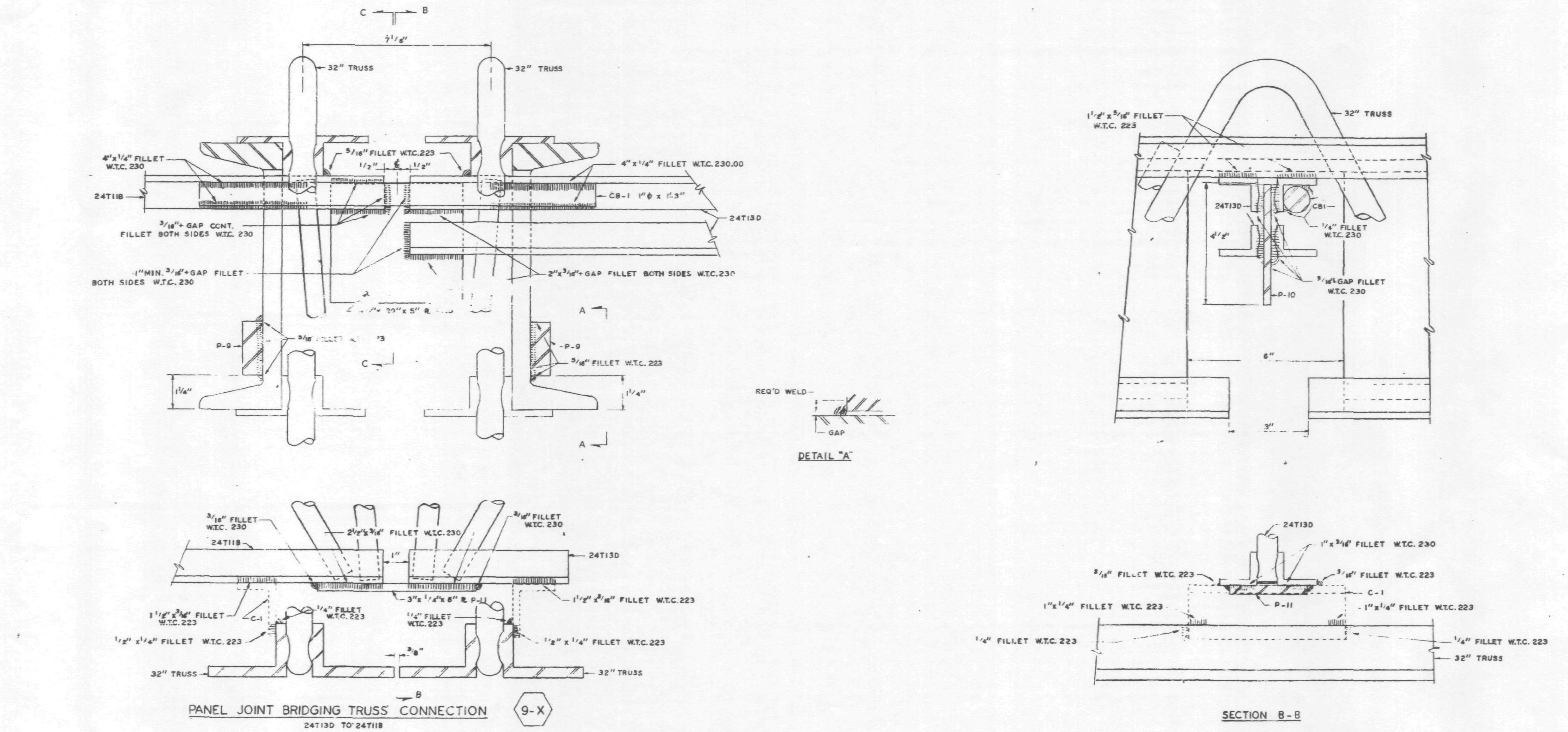

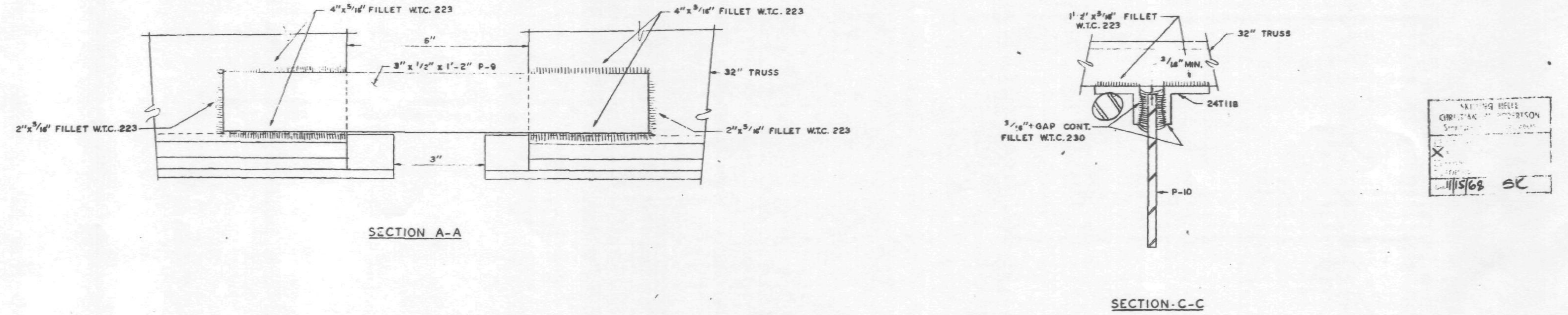

ALL ARC WELD TO BE MADE WITH LOW HYDROGEN RODS IN THE E-70 SERIES OR EQUAL.
ALL PLATES & ϕ SPLICE BARS TO BE A.S.T.M. A36 STEEL.
SEE DETAIL A (THIS SHEET) FOR ALL + GAP WELDS.
SEE SHEET CD 211 FOR CONNECTION IDENTIFICATION LIST FOR FLOORS 25, 59 & 92.

CONNECTION DETAILS
FOR
WORLD TRADE CENTER - N.Y.C.
FOR
THE PORT OF NEW YORK AUTHORITY

CONNECTION DETAIL 9-X FOR FLOORS 25, 59 & 92.
WORLD TRADE CENTER TOWERS A & B

FABRICATION BY LACLEDE STEEL COMPANY		
FABRICATED AT MADISON, ILLINOIS	DESIGN DRAWING NO.	PLATE
APPROVED FOR FABRICATION BY: FOR P.O.N.Y.A. DATE	DRAWN BY: gdc DATE OCT. 23, 1968	
APPROVED FOR FABRICATION BY: FOR FABRICATOR DATE	CHECKED BY: T.M.CHURA DATE OCT. 24, 1968	IN CHARGE OF PROD. DEV.
DETAILED BY: A. CARL WEBER (stamp: LACLEDE STEEL CO.)	FABRICATION CONT. NO. W.T.C. 221	SHEET NO. CD 213

11/15/68 SC

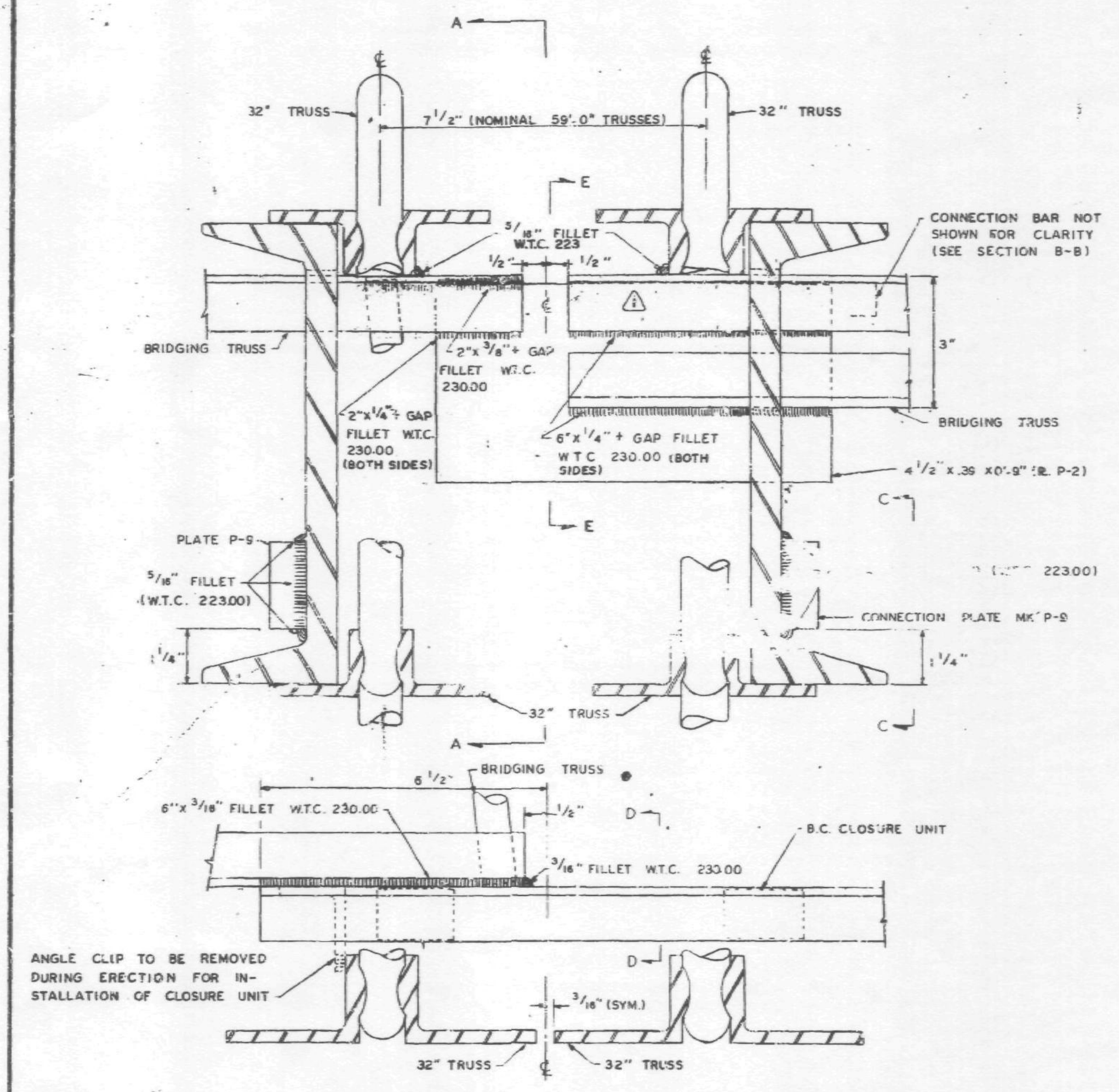

PANEL JOINT BRIDGING TRUSS CONNECTION (11-X)

24T15A TO 24T16B
24T15A TO 24T16C

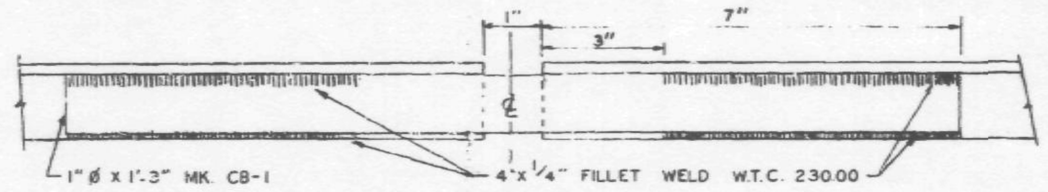

SECTION B-B

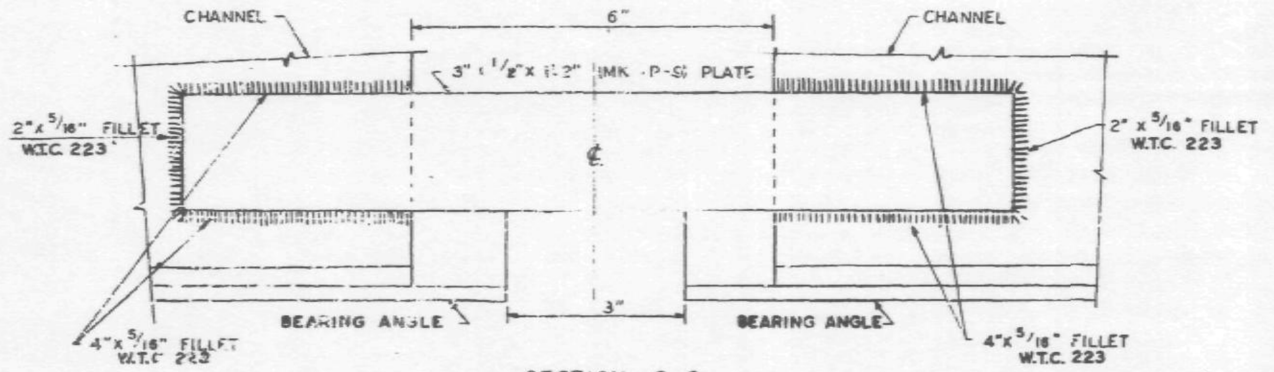

SECTION C-C

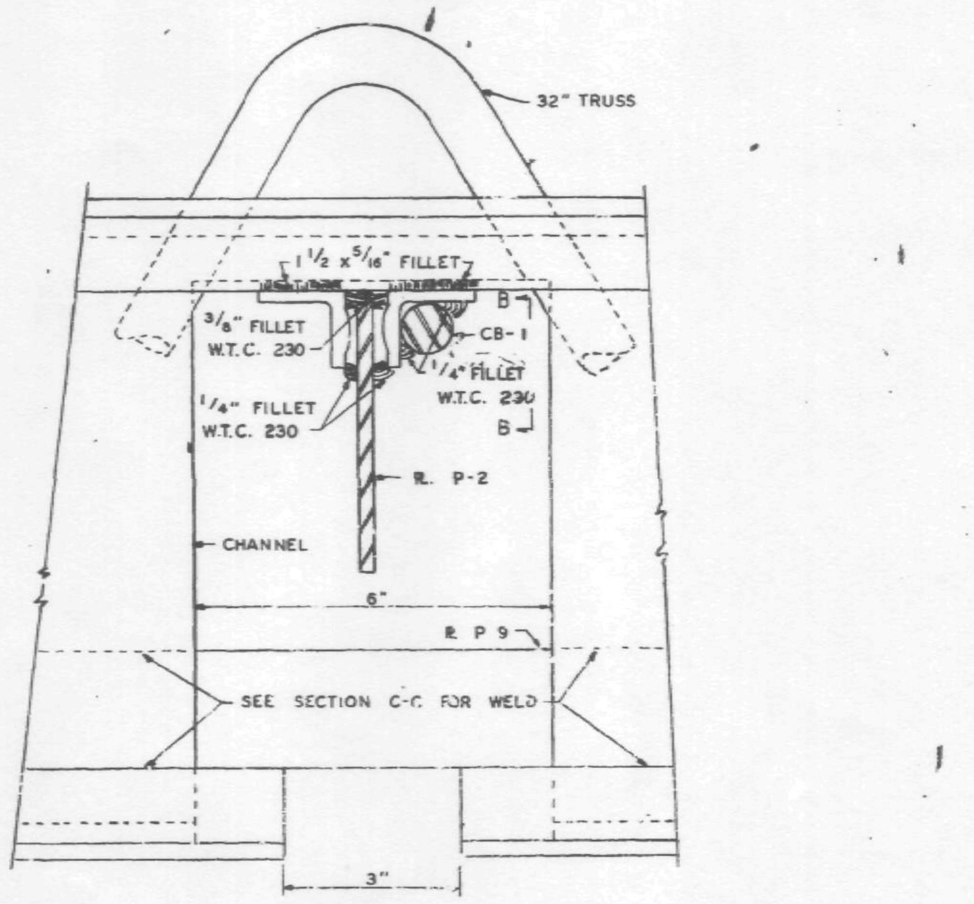

SECTION A-A

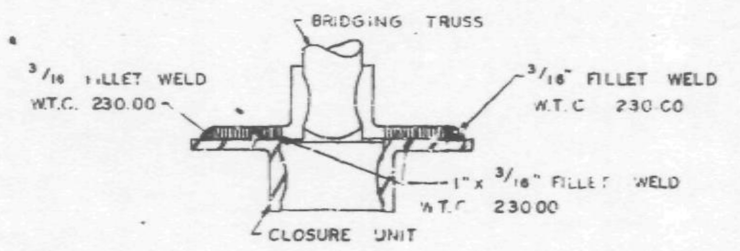

SECTION D-D

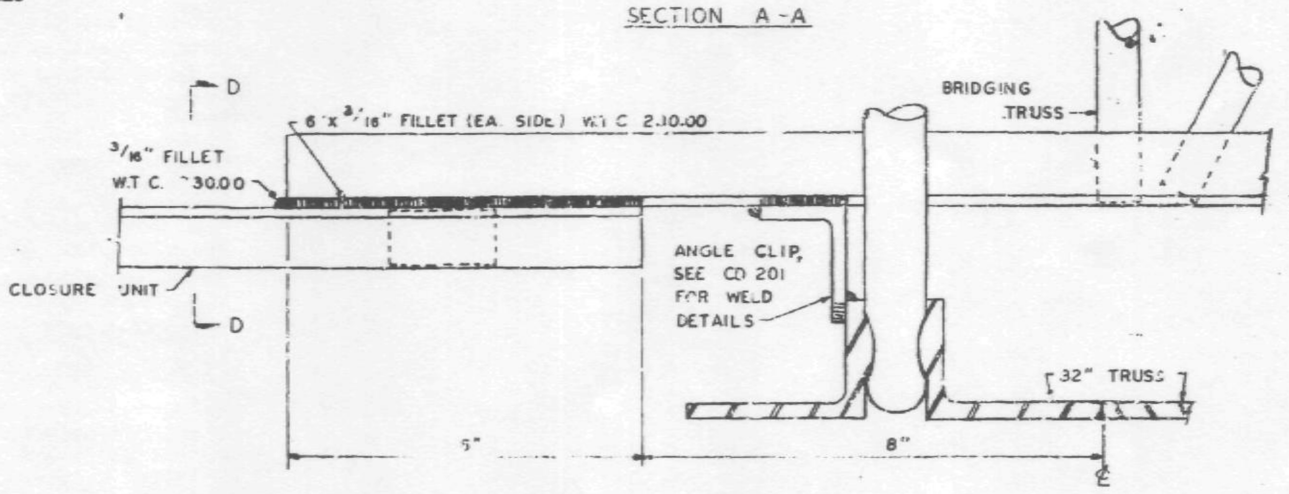

INTERIOR CONNECTION OF CLOSURE UNIT TO BRIDGING TRUSS

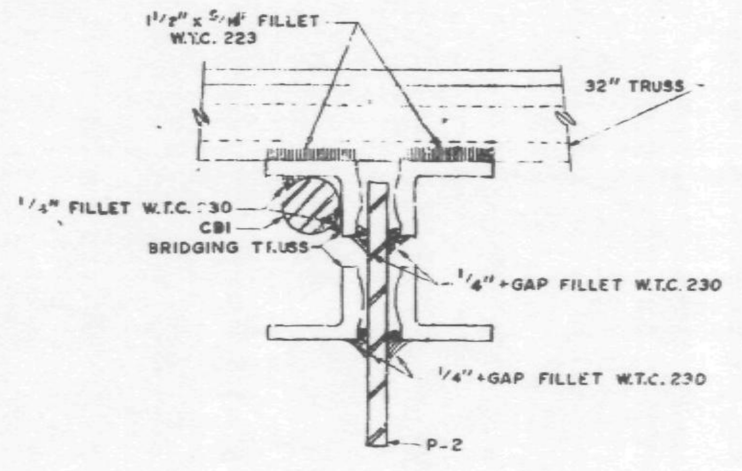

SECTION E-E

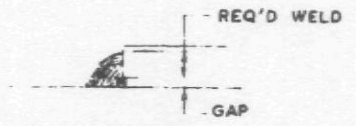

DETAIL "A"

ALL ARC WELDS TO BE MADE WITH LOW HYDROGEN RODS IN THE E-70 SERIES OR EQUAL.
UNLESS OTHERWISE NOTED ALL ARC WELDS MADE BY W.T.C. 223.
ALL PLATES & Ç SPLICE BARS TO BE A.S.T.M. A36 STEEL.
SEE SHEET CD 211 FOR CONNECTION IDENTIFICATION LIST FOR FLOORS 25, 59 & 92
SEE DETAIL "A", THIS SHEET, FOR +GAP WELDS.

CONNECTION DETAILS
FOR
WORLD TRADE CENTER - N.Y.C.
FOR
THE PORT OF NEW YORK AUTHORITY

CONNECTION DETAIL 11-X FLOORS 25-59-92

FABRICATION BY: LACLEDE STEEL COMPANY

FABRICATED AT MADISON, ILLINOIS		DESIGN DRAWING NO. 7-A84-17.7	PLATE
APPROVED FOR FABRICATION FOR P.O.N.Y.A.	DATE 12/6/68	DRAWN BY: [illegible] DATE: 10-25-68	
APPROVED FOR ... BY LACLEDE STEEL CO.	DATE	CHECKED BY: T M CHURA DATE: 10-28-68	IN CHARGE OF PROD. DEV.
DETAILED BY: A.C. WEBER		FABRICATION CONT. NO. W.T.C. 221	SHEET CD 214

NO	DATE	REVISION	BY
1	11-21-68	AS NOTED	G.D.C.

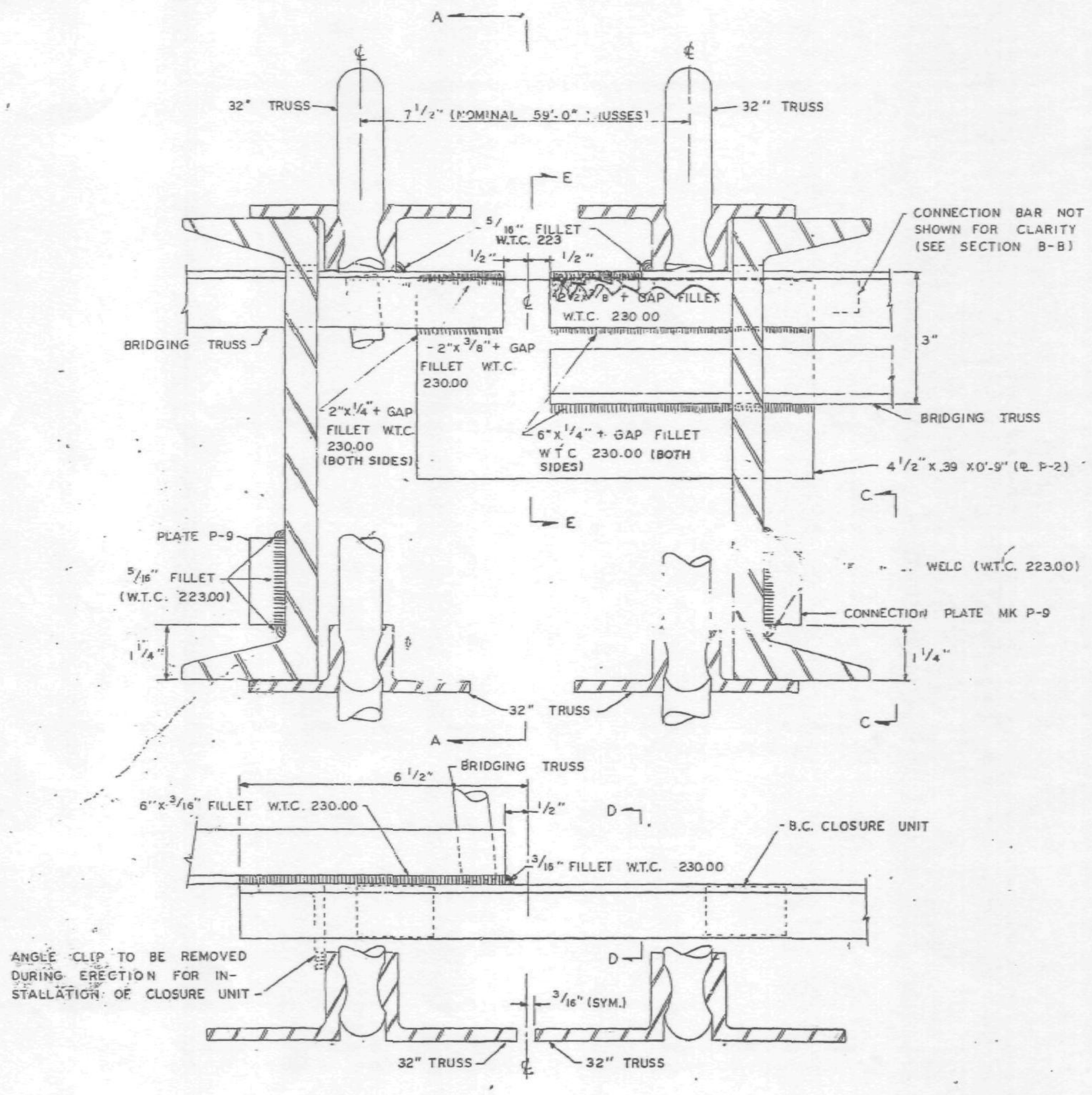

PANEL JOINT BRIDGING TRUSS CONNECTION (11-X)

24T15A TO 24T16B
24T15A TO 24T16C

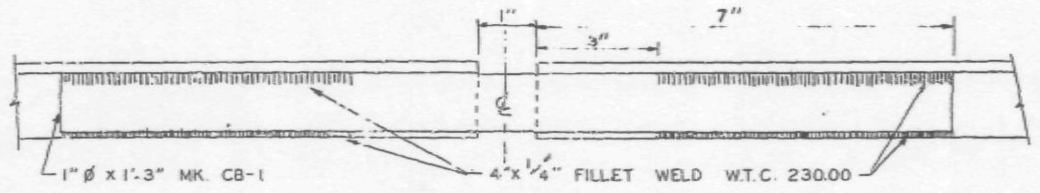

SECTION B-B

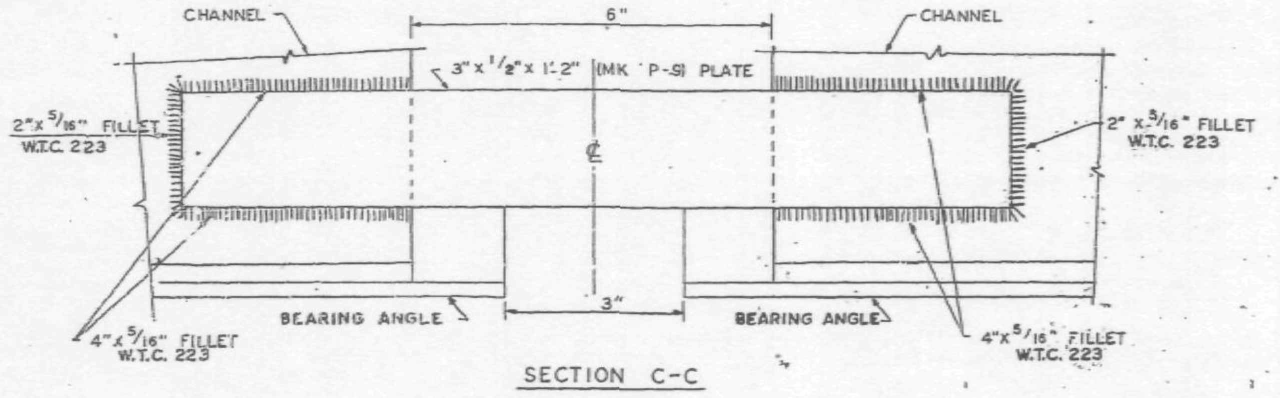

SECTION C-C

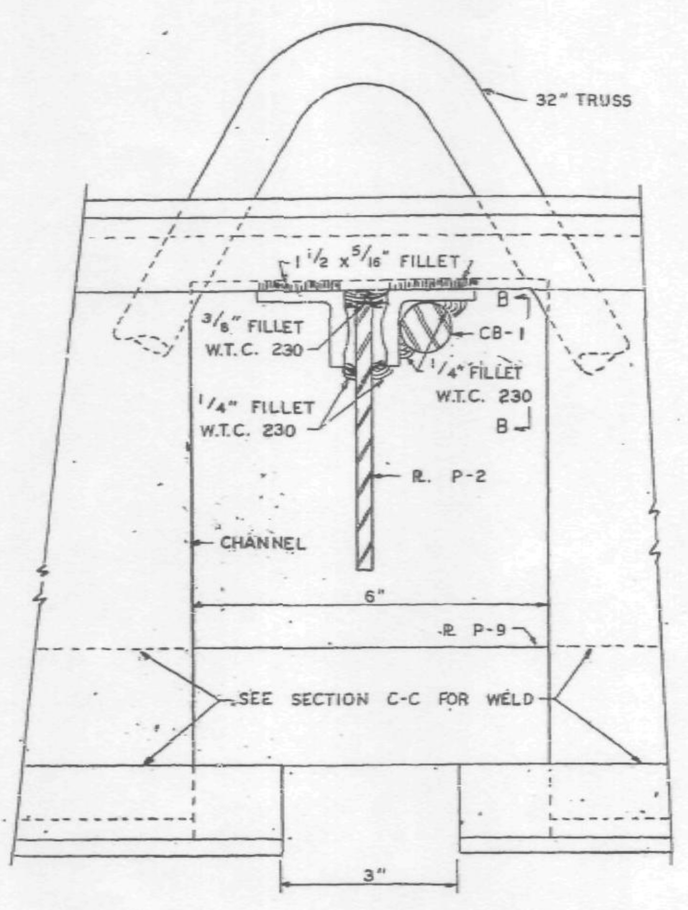

SECTION A-A

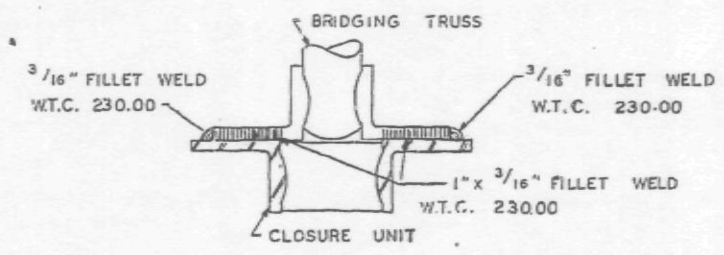

SECTION D-D

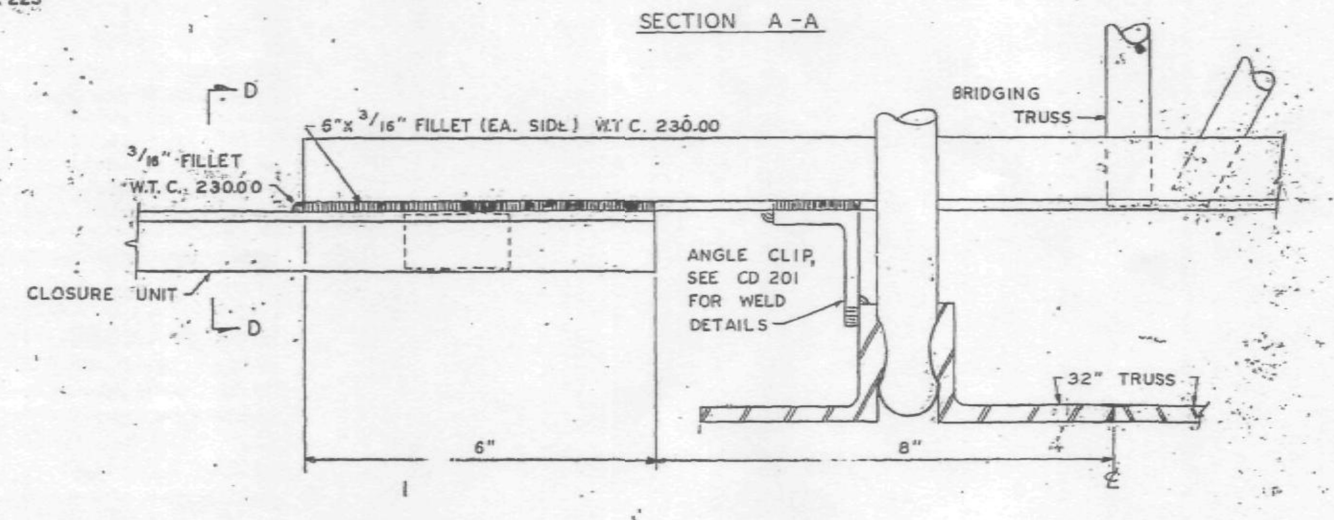

INTERIOR CONNECTION OF CLOSURE UNIT TO BRIDGING TRUSS

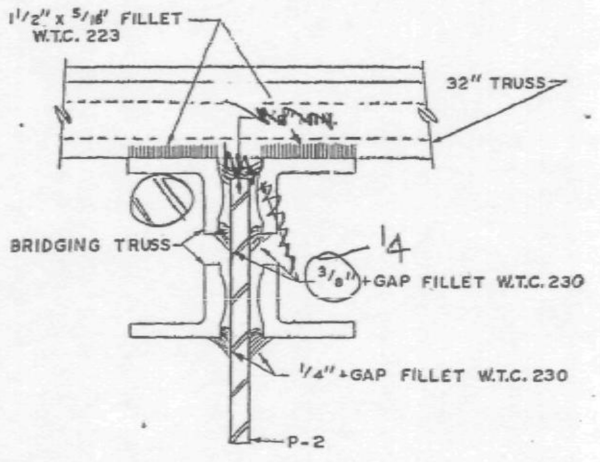

SECTION E-E

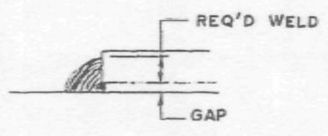

DETAIL "A"

ALL ARC WELDS TO BE MADE WITH LOW HYDROGEN RODS IN THE E-70 SERIES OR EQUAL.
UNLESS OTHERWISE NOTED ALL ARC WELDS MADE BY W.T.C. 223.
ALL PLATES & ø SPLICE BARS TO BE A.S.T.M. A36 STEEL.
SEE SHEET CD 211 FOR CONNECTION IDENTIFICATION LIST FOR FLOORS 25, 59 & 92.
SEE DETAIL "A", THIS SHEET, FOR +GAP WELDS.

SKILLING - HELLE
CHRISTIANSEN - ROBERTSON
Structural & Civil Engineers
X
11/15/68 SK

CONNECTION DETAILS
FOR
WORLD TRADE CENTER - N.Y.C.
FOR
THE PORT OF NEW YORK AUTHORITY

CONNECTION DETAIL 11-X FLOORS 25-59-92

FABRICATION BY: LACLEDE STEEL COMPANY

FABRICATED AT: MADISON, ILLINOIS		DESIGN DRAWING NO. 7-AB4-17.7	PLATE
APPROVED FOR FABRICATION BY: FOR P.O.N.Y.A.	DATE	DRAWN BY: DATE: 10-25-68	
APPROVED FOR FABRICATION BY FOR FABRICATOR	DATE	CHECKED BY: T M CHURA DATE: 10-28-68	IN CHARGE OF PROD. DEV.
LACLEDE STEEL CO. DETAILED BY: A.C. WEBER		FABRICATION CONT. NO. W.T.C 221	SHEET NO. CD 214

NO	DATE	REVISION	BY

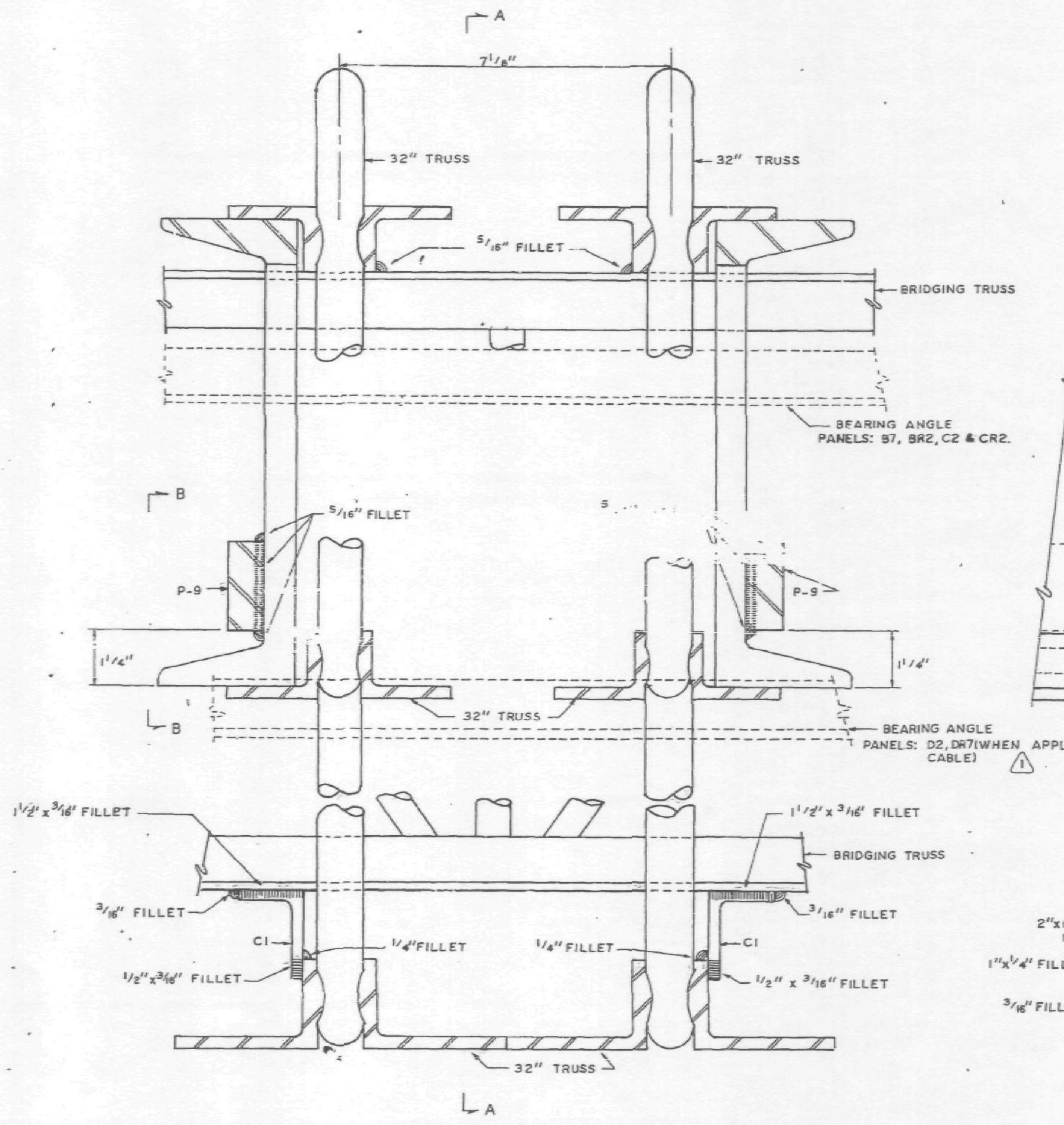

INTERIOR BRIDGING TRUSS CONNECTION (4-X)

PANELS: A2, B2, BR2, B7, BR7, C2, CR2, D2, DR2, D7, DR7, E2 & ER2. (2)

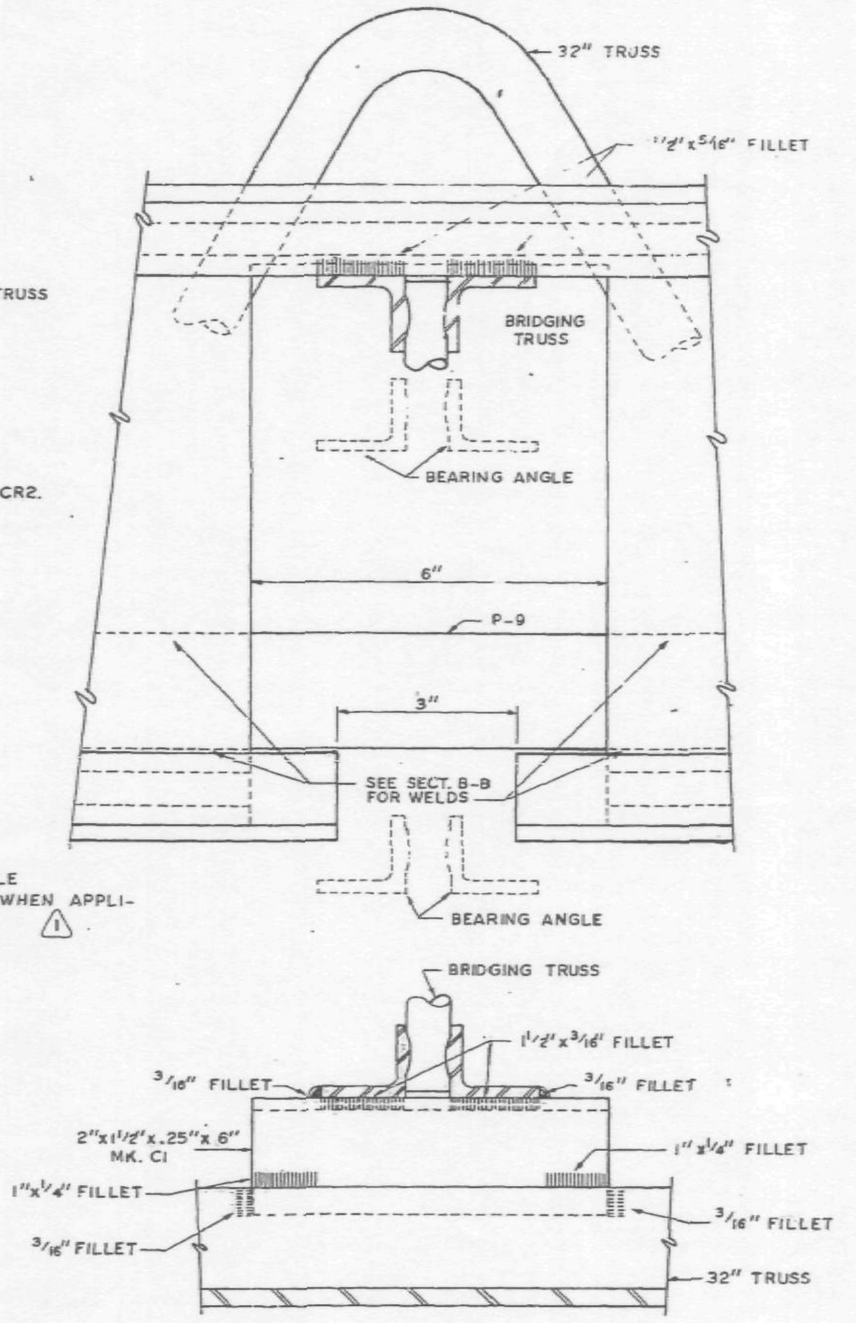

SECTION A-A

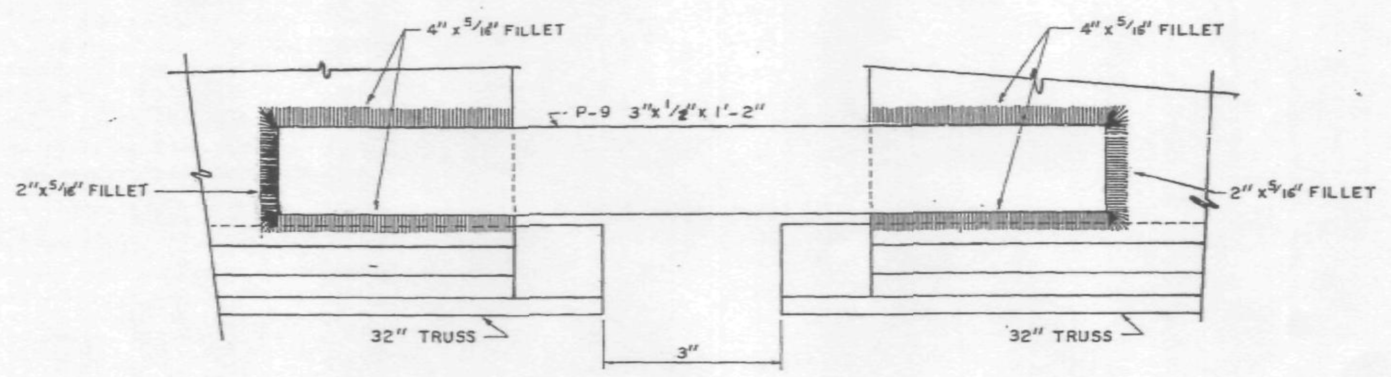

SECTION B-B

(BEARING ANGLE FOR PANELS D2 & DR7 NOT SHOWN FOR CLARITY) (1)

UNLESS OTHERWISE NOTED ALL ARC WELDS BY W.T.C. 223.
ALL ARC WELDS TO BE MADE WITH LOW HYDROGEN RODS IN THE E-70 SERIES OR EQUAL.
ALL PLATES TO BE A.S.T.M. A36 STEEL.
SEE SHEET CD 211 FOR CONNECTION IDENTIFICATION LIST FOR FLOORS 25, 59 & 92.

CONNECTION DETAILS
FOR
WORLD TRADE CENTER - N.Y.C.
FOR
THE PORT OF NEW YORK AUTHORITY

CONNECTION DETAIL 4-X FOR FLOORS 25, 59 & 92
WORLD TRADE CENTER TOWERS A & B

FABRICATION BY: LACLEDE STEEL COMPANY

FABRICATED AT MADISON, ILLINOIS		DESIGN DRAWING NO. 7-AB4-17	PLATE
APPROVED FOR FABRICATION BY: James White FOR P.O.N.Y.A.	DATE 1/31/69	DRAWN BY: G.D.C. DATE NOV. 4, 1968	
APPROVED FOR FABRICATION BY: FOR FABRICATOR	DATE	CHECKED BY: T.M.CHURA DATE NOV. 4, 1968	IN CHARGE OF PROD. DEV.
LACLEDE STEEL CO. DETAILED BY: A. CARL WEBER		FABRICATION CONT. NO. W.T.C. 221	SHEET NO. CD 215

NO.	DATE	REVISION	BY
2	1-9-69	AS NOTED	G.D.C.
1	11-21-68	AS NOTED	G.D.C.

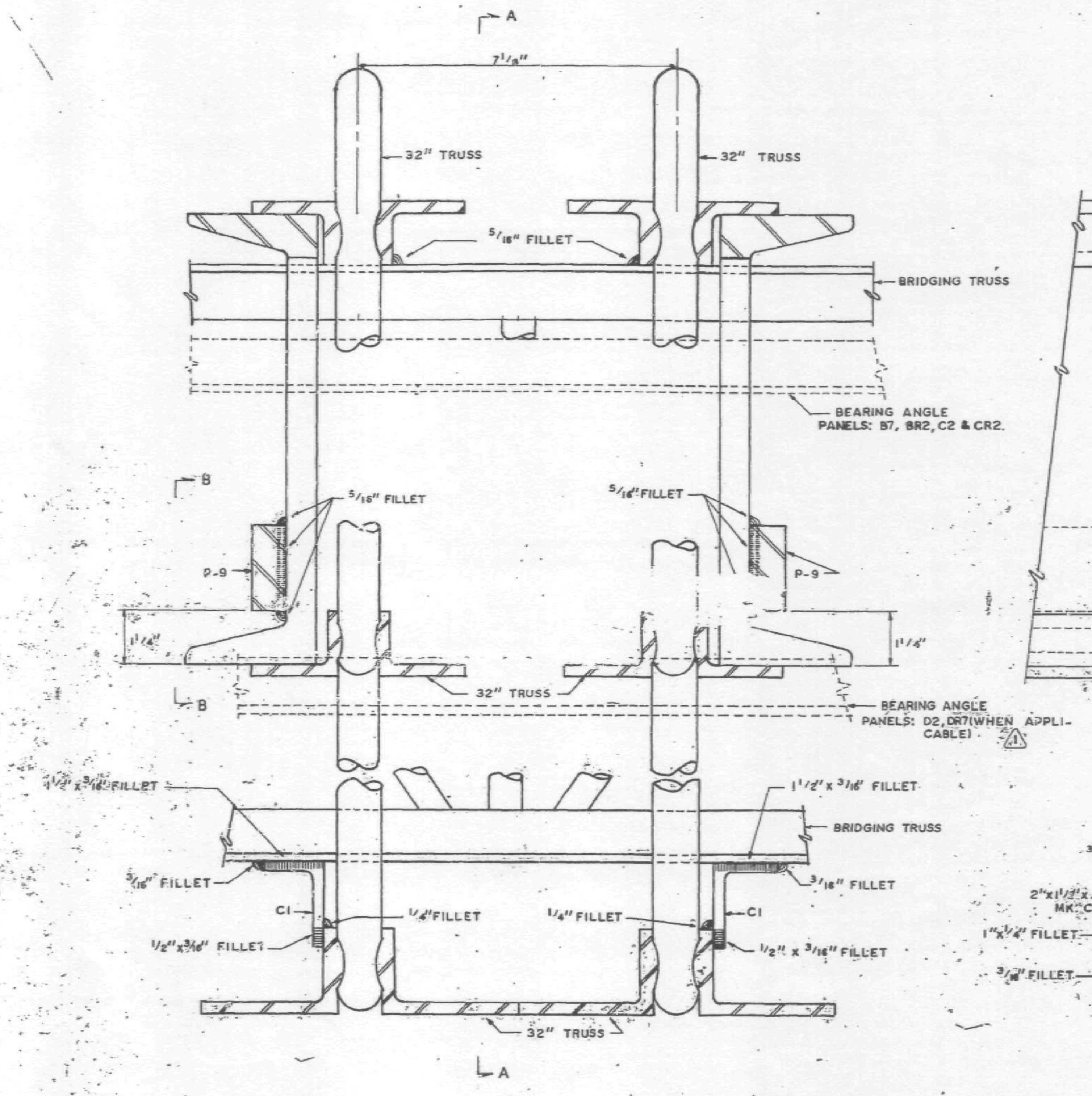

INTERIOR BRIDGING TRUSS CONNECTION 4-X

PANELS: A2, B2, BR2, B7, BR7, C2, CR2, DR2, D7, DR7, E2 & ER2.

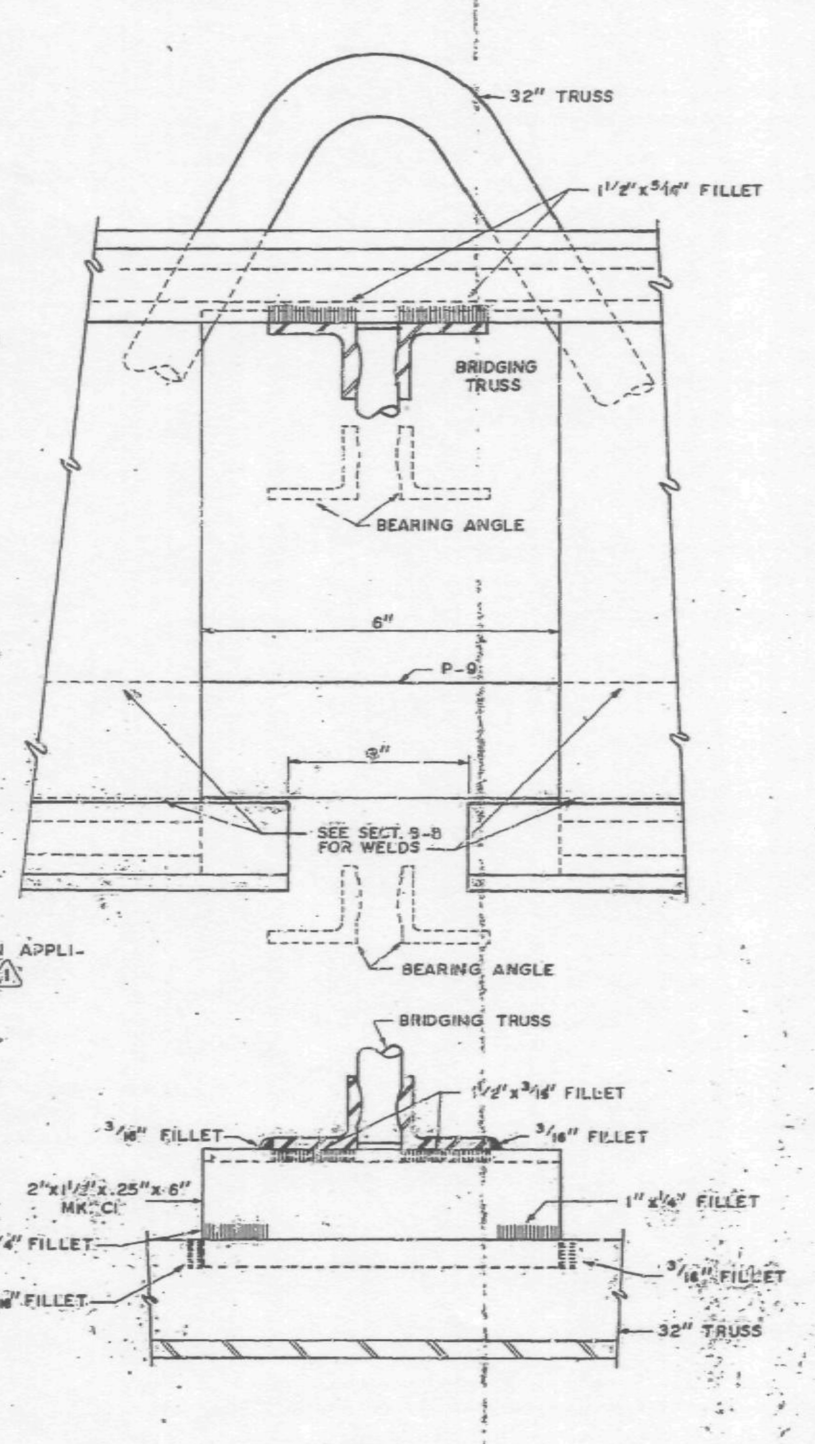

SECTION A-A

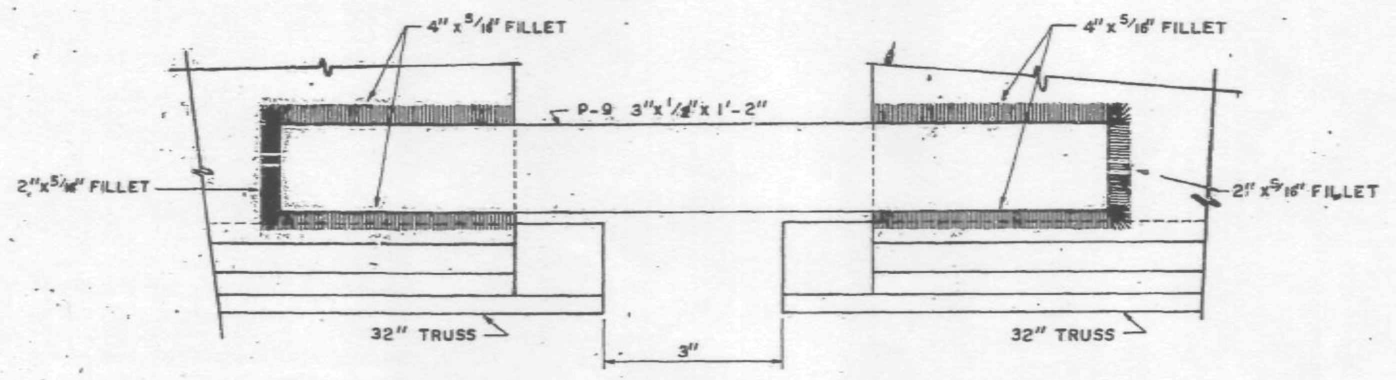

SECTION B-B

(BEARING ANGLE FOR PANELS D2 & DR7 NOT SHOWN FOR CLARITY) 1

UNLESS OTHERWISE NOTED ALL ARC WELDS BY W.T.C. 223.
ALL ARC WELDS TO BE MADE WITH LOW HYDROGEN RODS IN THE E-70 SERIES OR EQUAL.
ALL PLATES TO BE A.S.T.M. A36 STEEL.
SEE SHEET CD 211 FOR CONNECTION IDENTIFICATION LIST FOR FLOORS 25, 59 & 92.

CONNECTION DETAILS
FOR
WORLD TRADE CENTER – N.Y.C.
FOR
THE PORT OF NEW YORK AUTHORITY

CONNECTION DETAIL 4-X FOR FLOORS 25, 59 & 92

WORLD TRADE CENTER TOWERS A & B

FABRICATION BY: LACLEDE STEEL COMPANY

FABRICATED AT MADISON, ILLINOIS	DESIGN DRAWING NO. 7-AB4-17	PLATE
APPROVED FOR FABRICATION BY [signature] FOR P.O.N.Y.A. — DATE 12/6/68	DRAWN BY: G.D.C. DATE NOV. 4, 1968	
APPROVED FOR FABRICATION BY: LACLEDE STEEL CO. — DATE	CHECKED BY: T.M.CHURA DATE NOV. 4, 1968	IN CHARGE OF PROD. DEV.
DETAILED BY: A. CARL WEBER	FABRICATION CONT. NO. W.T.C. 221	SHEET NO. CD 215

NO.	DATE	REVISION	BY
1	11-21-68	AS NOTED	G.D.C.

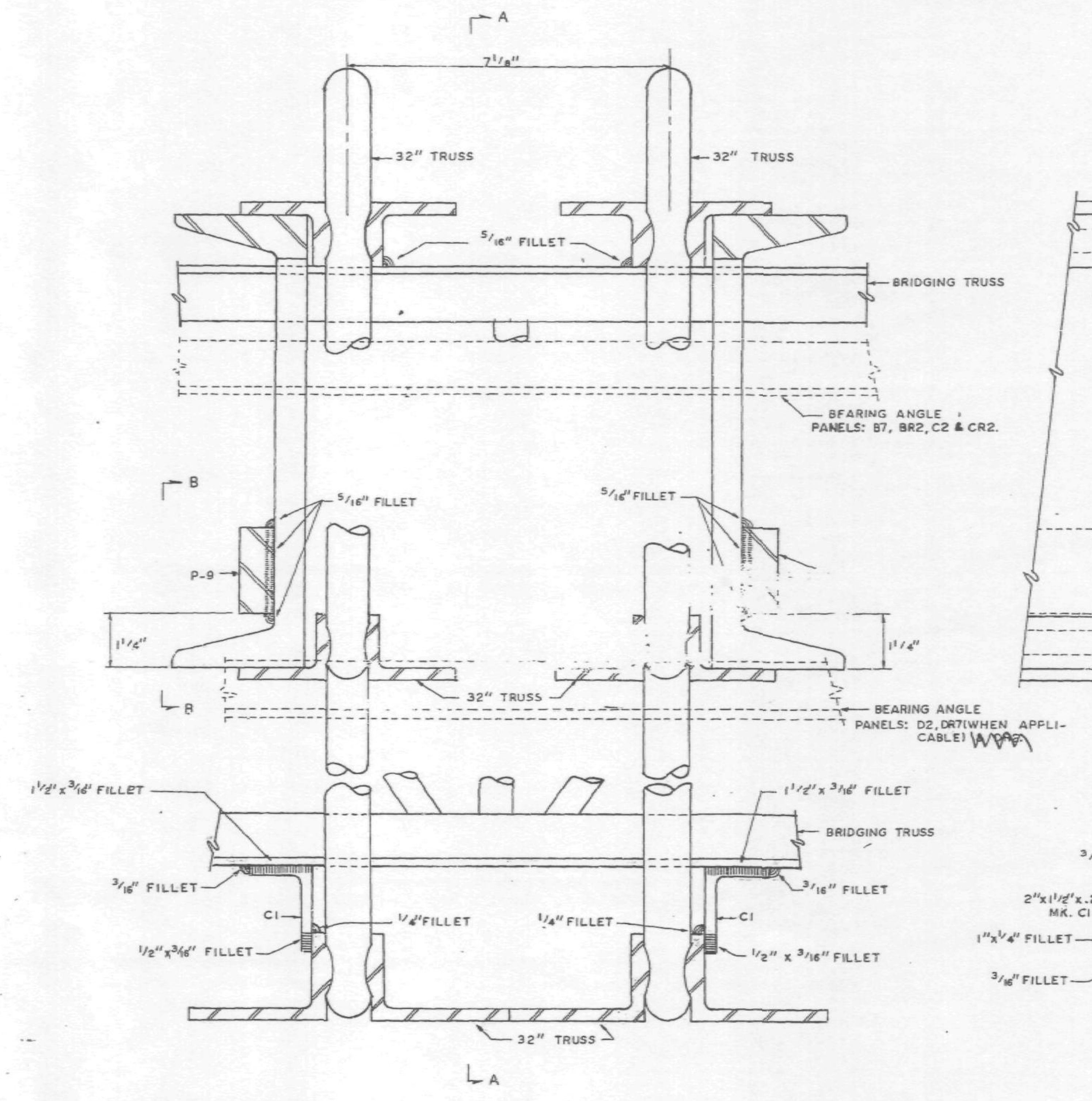

INTERIOR BRIDGING TRUSS CONNECTION (4-X)

PANELS: A2, B2, BR2, B7, BR7, C2, CR2, DR2, D7, DR7, E2 & ER2.

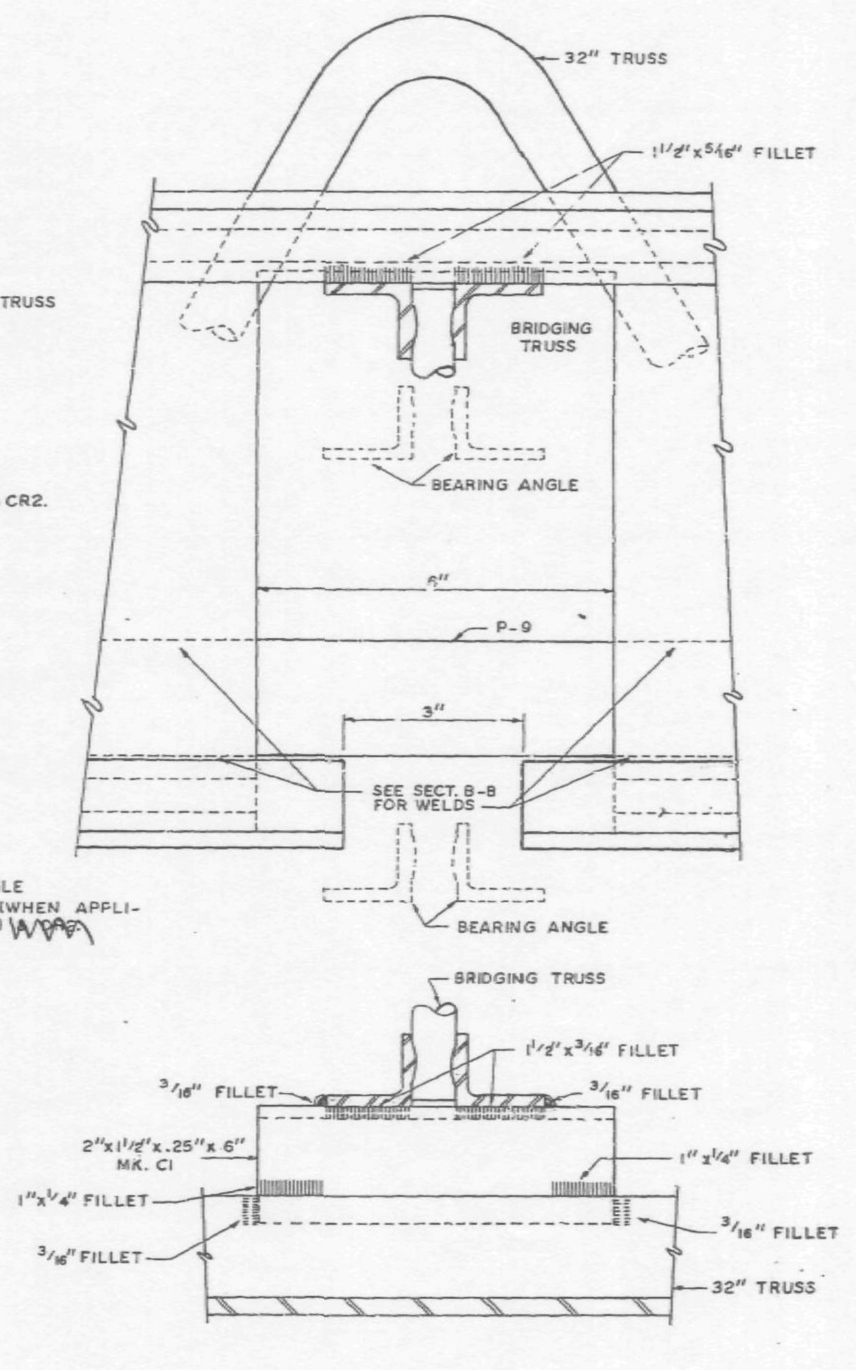

SECTION A-A

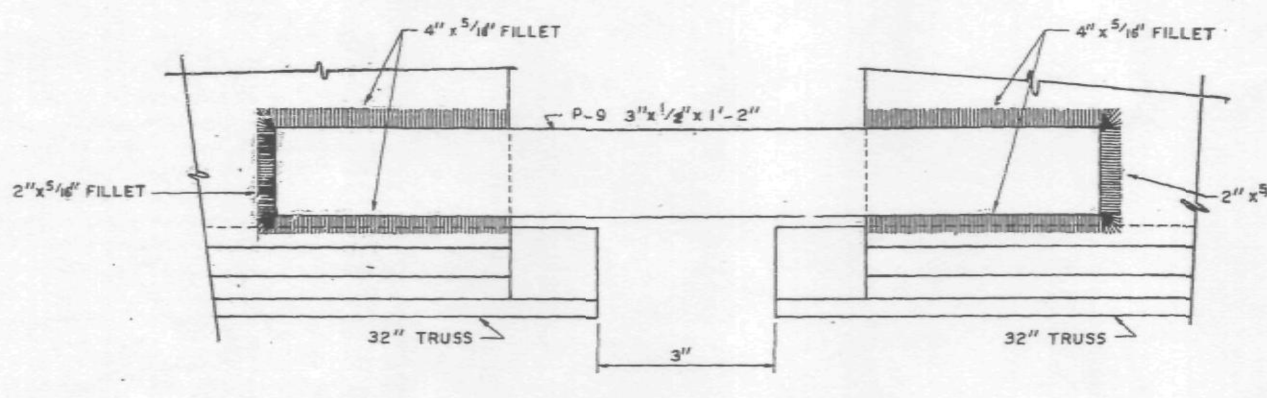

SECTION B-B

(BEARING ANGLE FOR PANELS D2, DR2 & DR7 NOT SHOWN FOR CLARITY)

UNLESS OTHERWISE NOTED ALL ARC WELDS BY W.T.C. 223.
ALL ARC WELDS TO BE MADE WITH LOW HYDROGEN RODS IN THE E-70 SERIES OR EQUAL.
ALL PLATES TO BE A.S.T.M. A36 STEEL.
SEE SHEET CD 211 FOR CONNECTION IDENTIFICATION LIST FOR FLOORS 25, 59 & 92.

SKILLING - HELLE
CHRISTIANSEN - ROBERTSON
Structural & Civil Engineers
11 15 68 SK

CONNECTION DETAILS
FOR
WORLD TRADE CENTER - N.Y.C.
FOR
THE PORT OF NEW YORK AUTHORITY

CONNECTION DETAIL 4-X FOR FLOORS 25, 59 & 92

WORLD TRADE CENTER TOWERS A & B

FABRICATION BY: LACLEDE STEEL COMPANY

FABRICATED AT MADISON, ILLINOIS		DESIGN DRAWING NO. 7-AB4-17	PLATE
APPROVED FOR FABRICATION BY: FOR P.O.N.Y.A.	DATE	DRAWN BY: G.D.C. DATE NOV. 4, 1968	
APPROVED FOR FABRICATION BY: FOR FABRICATOR	DATE	CHECKED BY: T.M.CHURA DATE NOV. 4, 1968	IN CHARGE OF PROD. DEV.
DETAILED BY: A. CARL WEBER		FABRICATION CONT. NO. W.T.C. 221	SHEET NO. CD 215

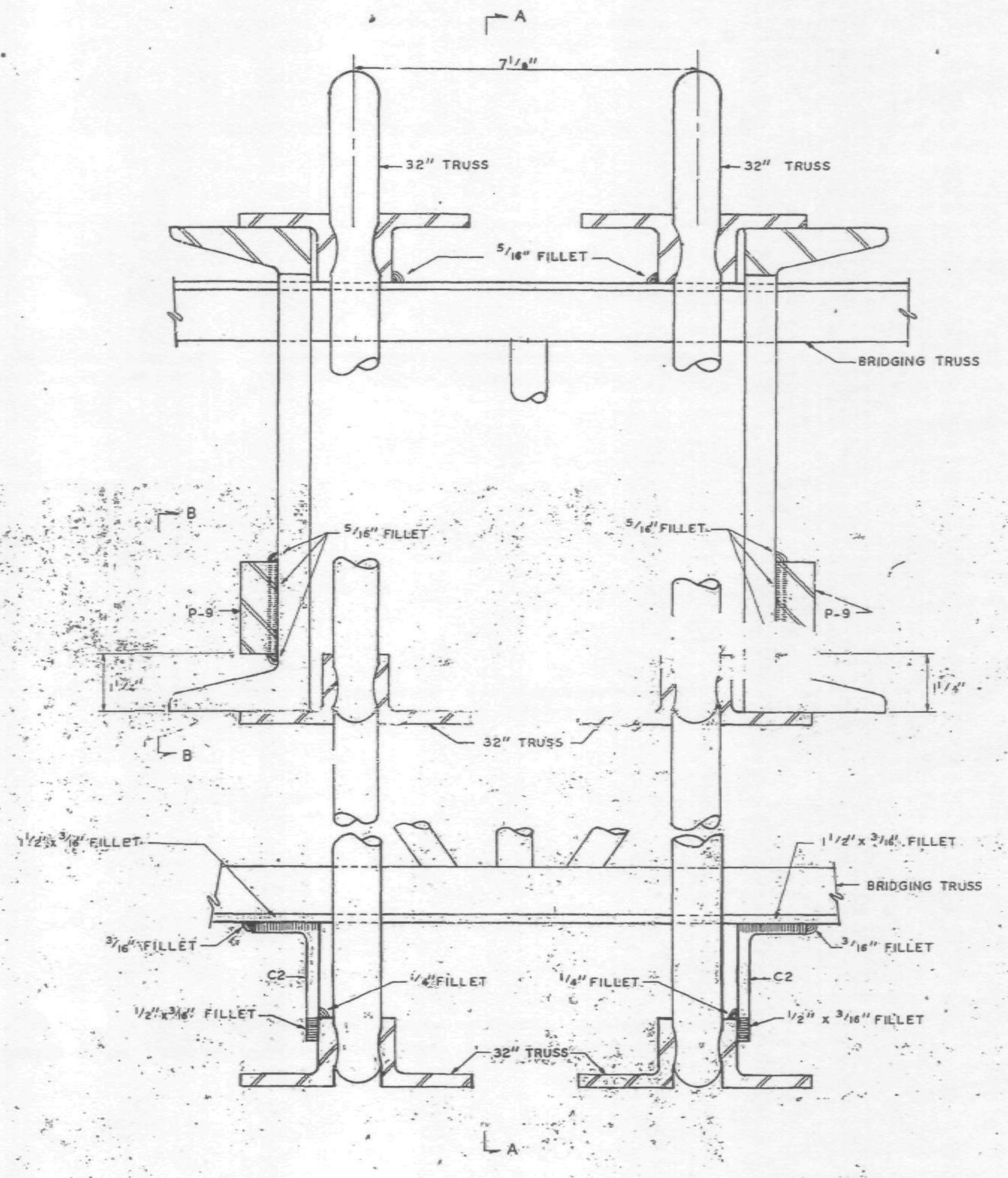

INTERIOR BRIDGING TRUSS CONNECTION (4-XA)

PANELS: F2 & FR2

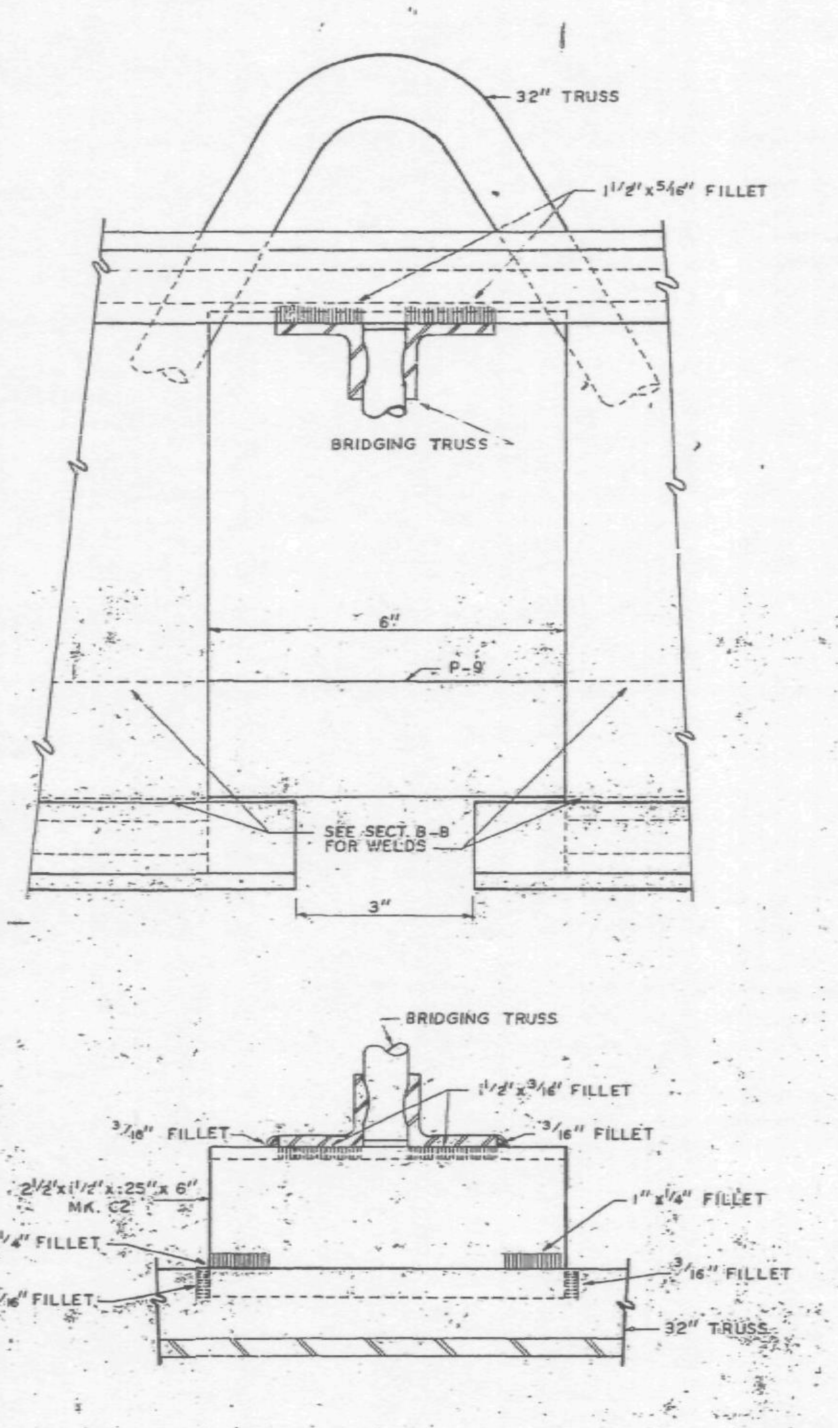

SECTION A-A

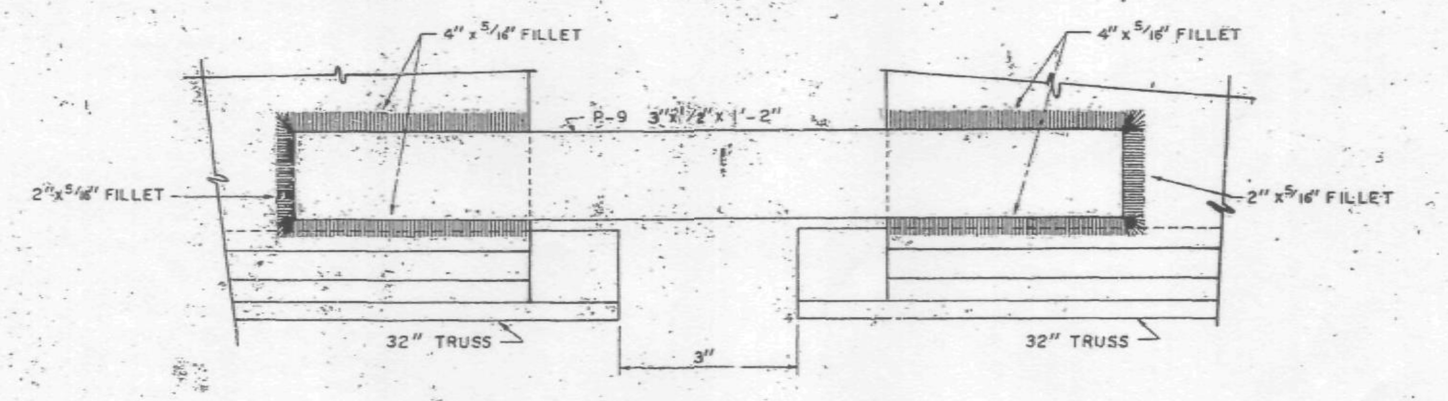

SECTION B-B

UNLESS OTHERWISE NOTED ALL ARC WELDS BY W.T.C. 223.
ALL ARC WELDS TO BE MADE WITH LOW HYDROGEN RODS IN THE E-70 SERIES OR EQUAL.
ALL PLATES TO BE A.S.T.M. A36 STEEL.
SEE SHEET CD 211 FOR CONNECTION IDENTIFICATION LIST FOR FLOORS 25, 59 & 92.

CONNECTION DETAILS
FOR
WORLD TRADE CENTER - N.Y.C.
FOR
THE PORT OF NEW YORK AUTHORITY

CONNECTION DETAIL 4-XA FOR FLOORS 25, 59 & 92
WORLD TRADE CENTER TOWERS A & B

FABRICATION BY: LACLEDE STEEL COMPANY

FABRICATED AT MADISON, ILLINOIS	DESIGN DRAWING NO. 7-AB4-17	PLATE
APPROVED FOR FABRICATION BY: James White FOR P.O.N.Y.A. — DATE 12/19/68	DRAWN BY: G.D.C. DATE NOV. 4, 1968	
APPROVED FOR FABRICATION BY: FOR FABRICATOR — DATE	CHECKED BY: T.M.CHURA DATE NOV. 4, 1968	IN CHARGE OF PROD. DEV.
DETAILED BY: A. CARL WEBER LACLEDE STEEL CO.	FABRICATION CONT. NO. W.T.C. 221	SHEET NO. CD 216

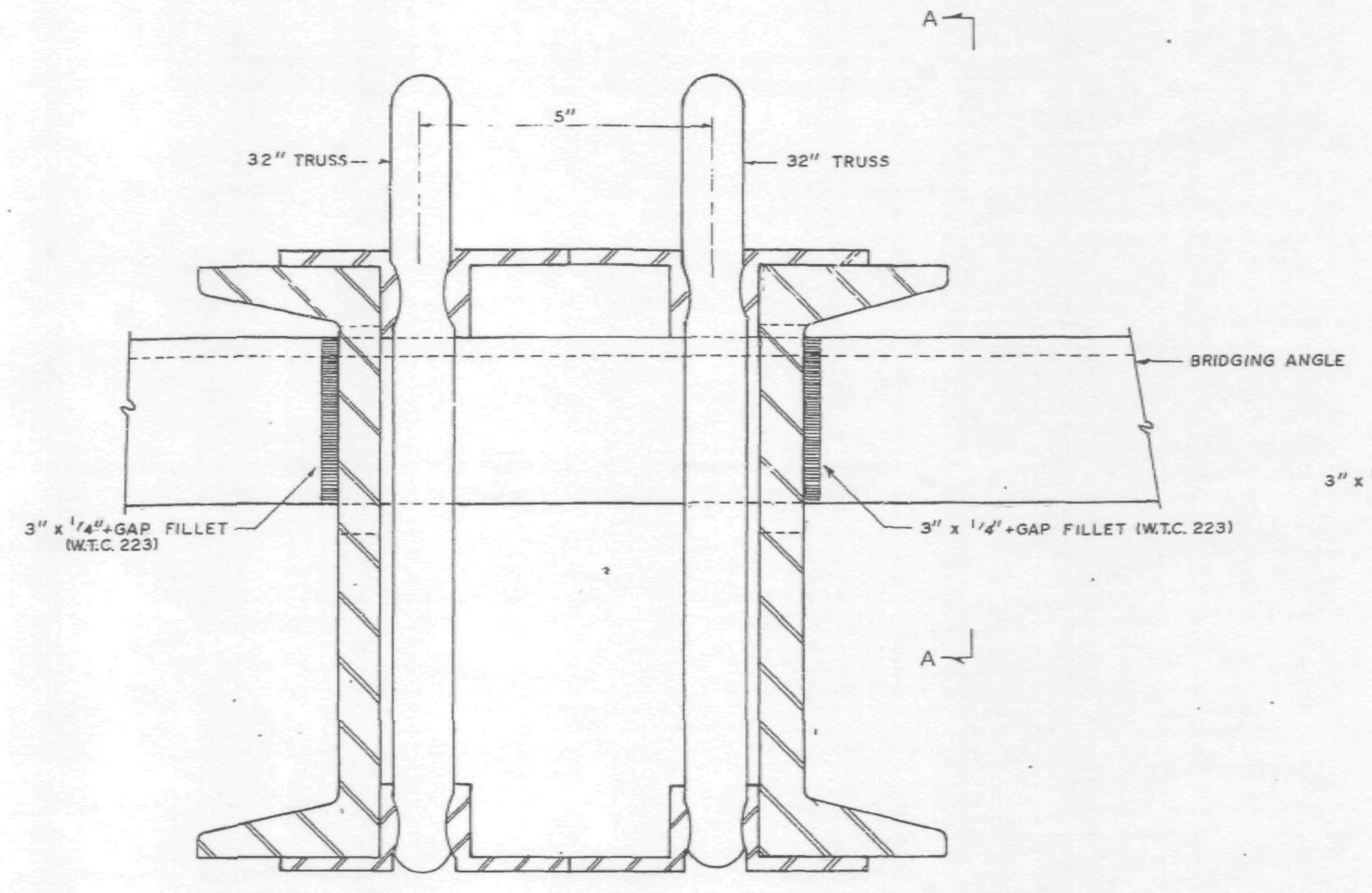

INTERIOR BRIDGING ANGLE CONNECTION (1-XA) (2)

(2) PANELS: J2, H2, H7, HR2, HR7, G2 & GR2.

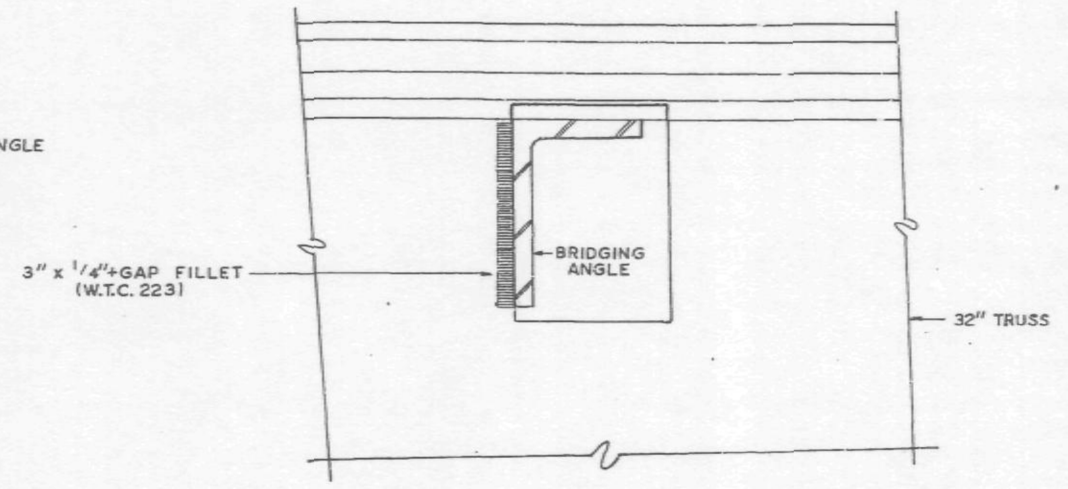

SECTION A-A

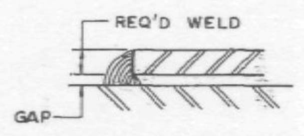

DETAIL "A"

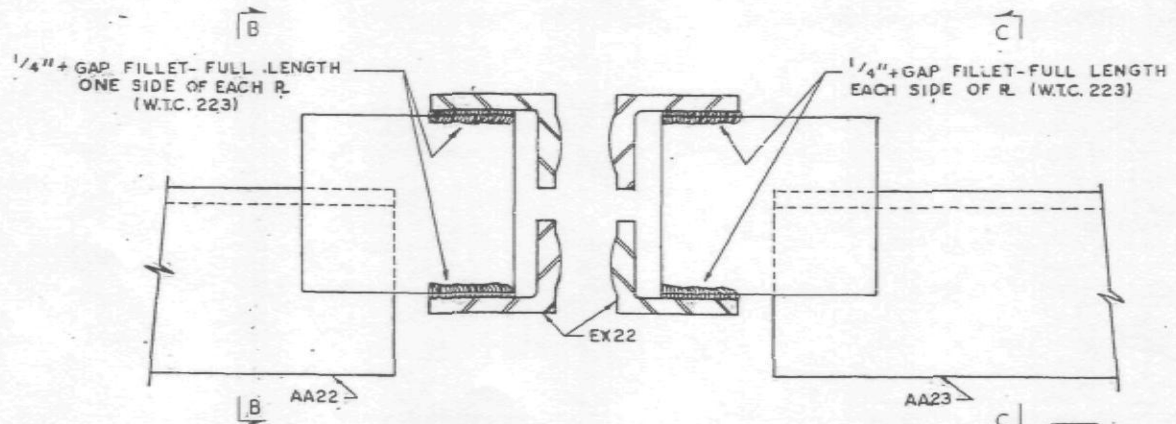

INTERIOR BRIDGING ANGLE CONNECTION (3-XB)

PANELS: F2 & FR2*

(2)

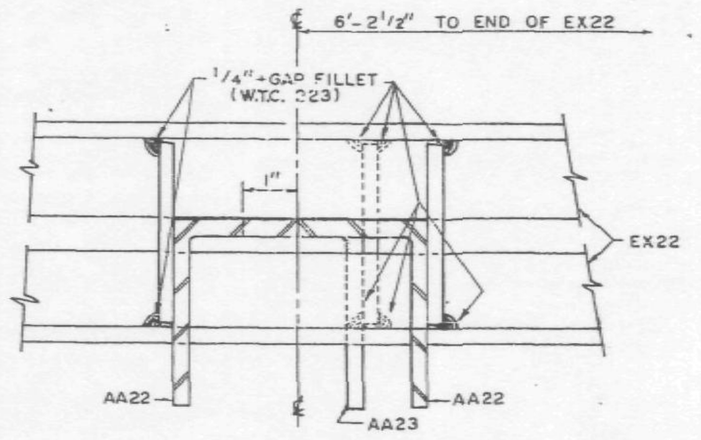

SECTION B-B (2)

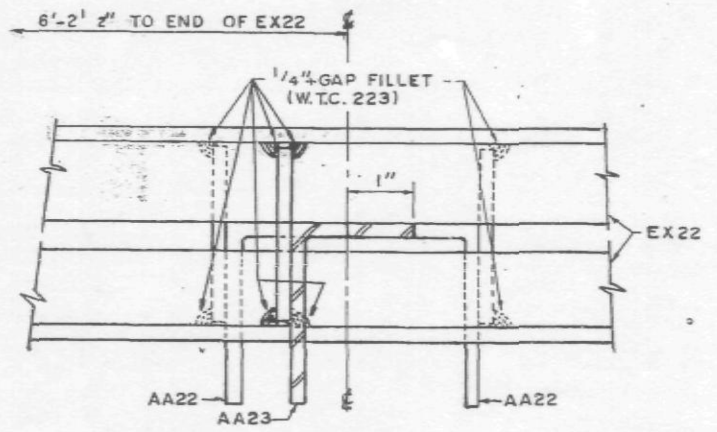

SECTION C-C (2)

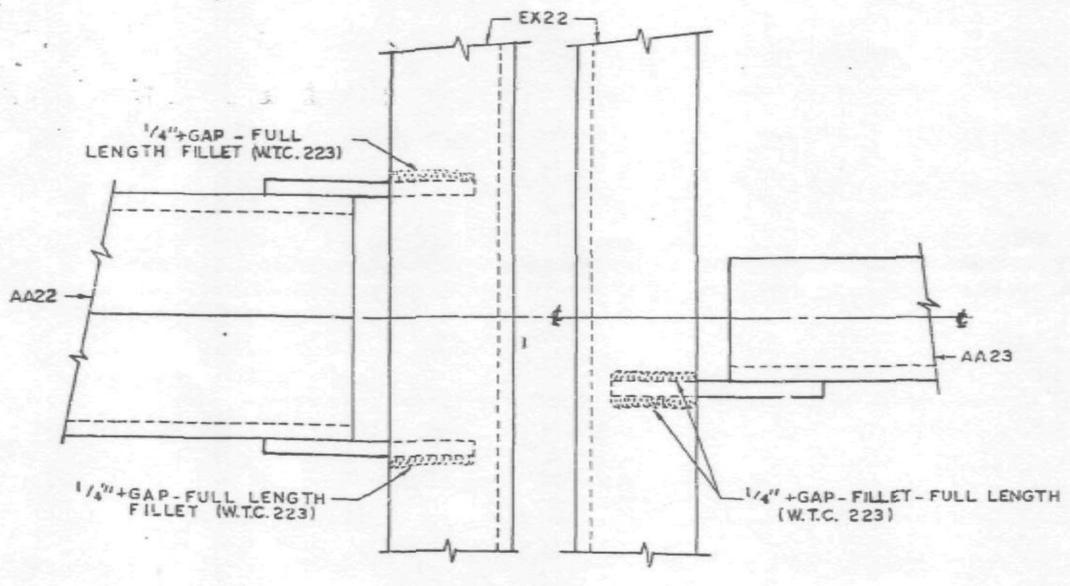

TOP VIEW (2)

* OPP. HAND FOR FR2 PANEL-AA23R REPLACES AA23.

ALL ARC WELDS TO BE MADE WITH LOW HYDROGEN RODS IN THE E-70 SERIES OR EQUAL.
SEE SHEET CD 211 FOR LIST OF CONNECTIONS FOR FLOORS 25, 59 & 92.
SEE DETAIL "A" (THIS SHEET) FOR ALL +GAP WELDS.

NO.	DATE	REVISION	BY
2	6-20-69	AS NOTED	G.D.C.
1	11-21-68	AS NOTED	G.D.C.

CONNECTION DETAILS
FOR
WORLD TRADE CENTER - N.Y.C.
FOR
THE PORT OF NEW YORK AUTHORITY

CONNECTION DETAILS 1-XA & 3-XB FOR FLOORS 25, 59 & 92. (2)
WORLD TRADE CENTER TOWERS A & B.

FABRICATION BY LACLEDE STEEL COMPANY

FABRICATED AT MADISON, ILLINOIS		DESIGN DRAWING NO.	PLATE
APPROVED FOR FABRICATION BY: FOR P.O.N.Y.A.	DATE 7/2/69	DRAWN BY: gdc DATE NOV. 6, 1968	
APPROVED FOR FABRICATION BY: FOR FABRICATOR	DATE	CHECKED BY: T.M.CHURA DATE NOV. 6, 1968	IN CHARGE OF PROD. DEV.
DETAILED BY: A. CARL WEBER		FABRICATION CONT. NO. W.T.C 221	SHEET NO. CD 217

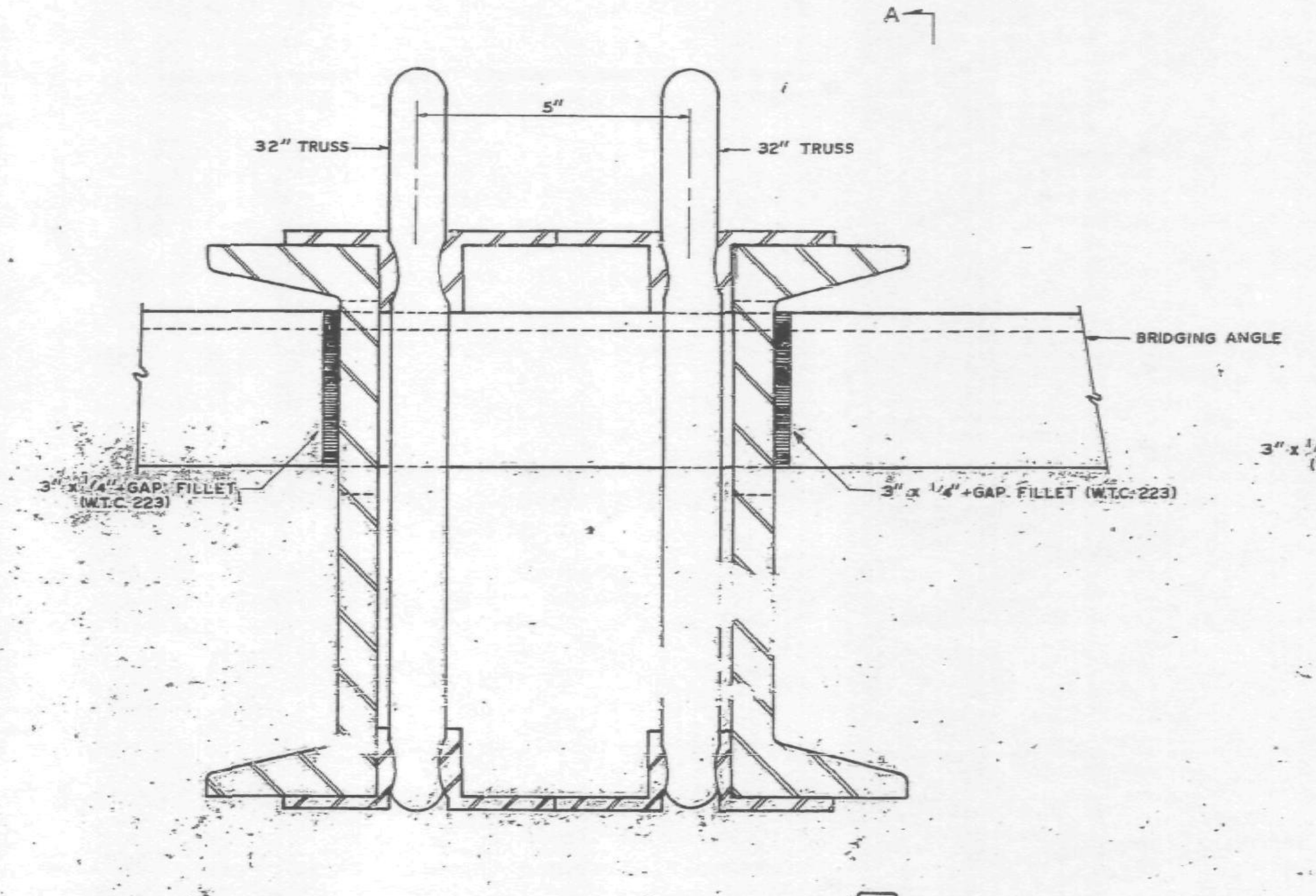

INTERIOR BRIDGING ANGLE CONNECTION (3-X)

⚠1 PANELS: J2, H2, H7, HR2, HR7, G2 & GR7.

GR2

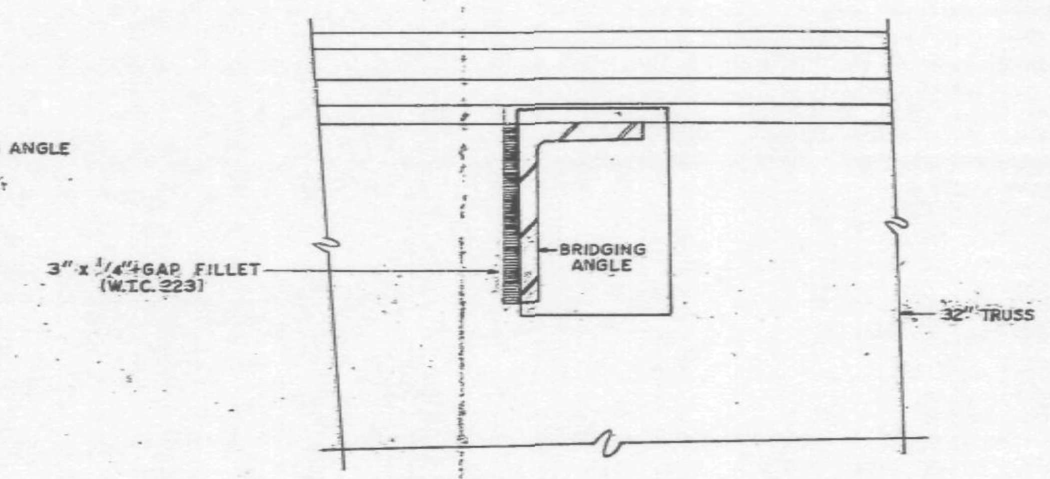

SECTION A-A

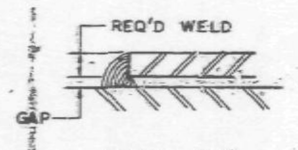

DETAIL "A"

ALL ARC WELDS TO BE MADE WITH LOW HYDROGEN RODS IN THE E-70 SERIES OR EQUAL.
SEE SHEET CD 211 FOR LIST OF CONNECTIONS FOR FLOORS 25, 59 & 92.
SEE DETAIL "A" (THIS SHEET) FOR ALL +GAP WELDS.

SKILLING-HELLE CHRISTIANSEN-ROBERTSON
Structural & Civil Engineers
APPROVED
X APPROVED AS NOTED
RESUBMIT
REJECTED
Date 12/6/68 SK

NO.	DATE	REVISION	BY
1	11-21-68	AS NOTED	G.D.C.

CONNECTION DETAILS
FOR
WORLD TRADE CENTER - N.Y.C.
FOR
THE PORT OF NEW YORK AUTHORITY

CONNECTION DETAILS 3-X FOR FLOORS 25, 59 & 92.
WORLD TRADE CENTER TOWERS A & B.

FABRICATION BY: LACLEDE STEEL COMPANY

FABRICATED AT MADISON, ILLINOIS		DESIGN DRAWING NO.	PLATE
APPROVED FOR FABRICATION BY: FOR P.O.N.Y.A.	DATE	DRAWN BY: gdc DATE NOV. 6, 1968	
APPROVED FOR FABRICATION BY: LACLEDE STEEL CO. FOR FABRICATOR	DATE	CHECKED BY: T.M.CHURA DATE NOV. 6, 1968	IN CHARGE OF PROD. DEV.
DETAILED BY: A. CARL WEBER		FABRICATION CONT. NO. W.T.C. 221	SHEET NO. CD 217

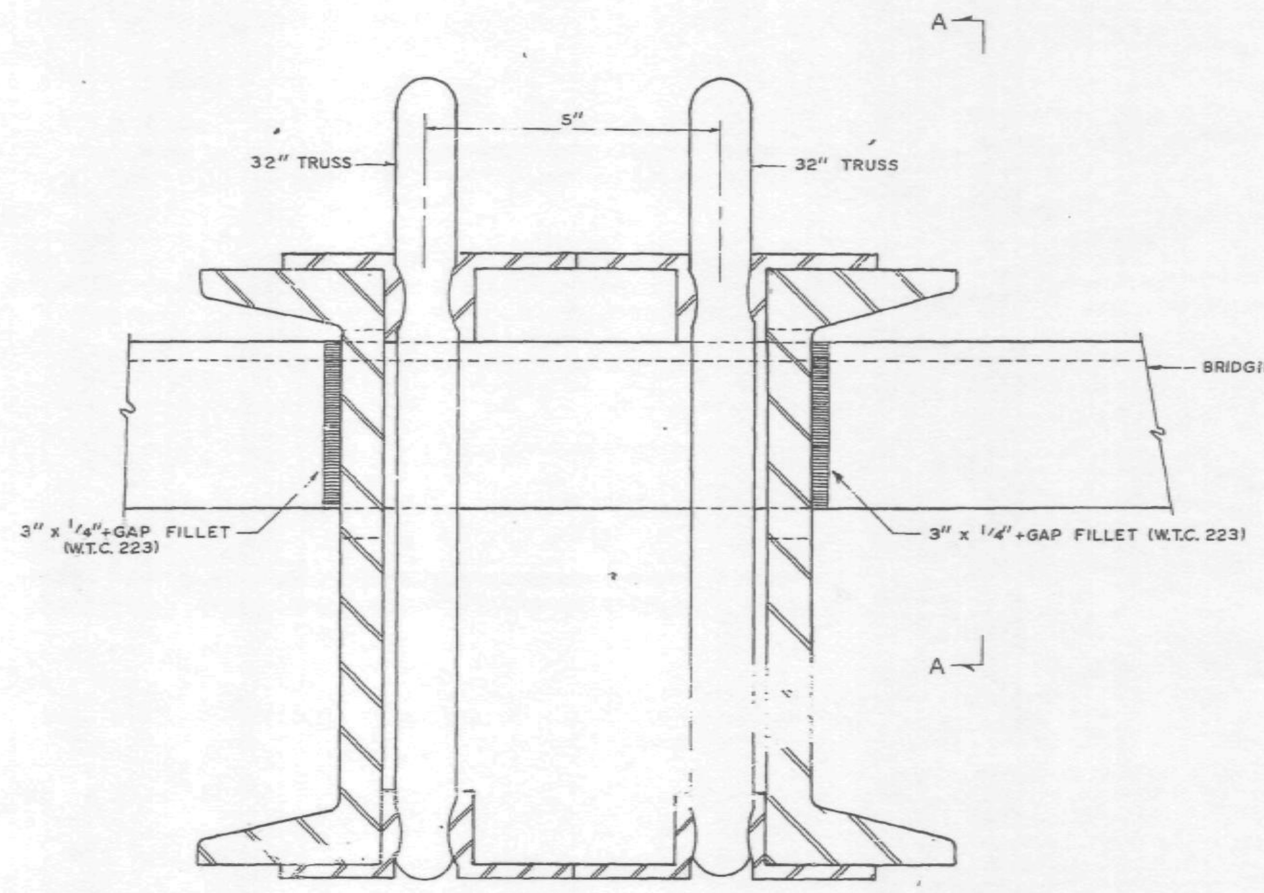

INTERIOR BRIDGING ANGLE CONNECTION (3-X)

PANELS: J2, H7, HR2, G2, AND GR2.

H2 & HR7

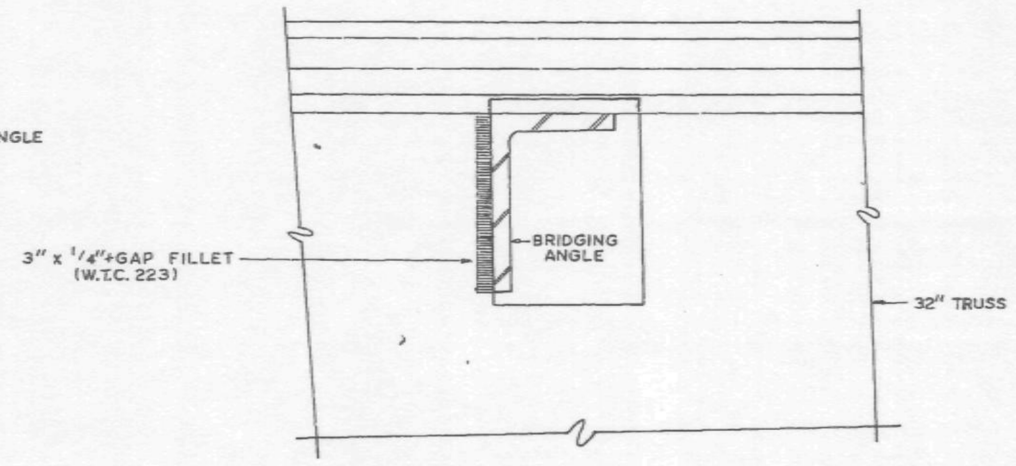

SECTION A-A

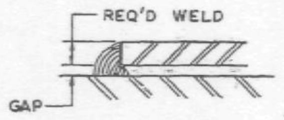

DETAIL "A"

ALL ARC WELDS TO BE MADE WITH LOW HYDROGEN RODS IN THE E-70 SERIES OR EQUAL.
SEE SHEET CD 211 FOR LIST OF CONNECTIONS FOR FLOORS 25, 59 & 92.
SEE DETAIL "A" (THIS SHEET) FOR ALL +GAP WELDS.

SKILLING-HELLE CHRISTIANSEN-ROBERTSON Structural & Civil Engineers
X
11/15/68 SK

CONNECTION DETAILS
FOR
WORLD TRADE CENTER - N.Y.C.
FOR
THE PORT OF NEW YORK AUTHORITY

CONNECTION DETAILS 3-X FOR FLOORS 25, 59 & 92.
WORLD TRADE CENTER TOWERS A & B.

FABRICATION BY: LACLEDE STEEL COMPANY

FABRICATED AT MADISON, ILLINOIS	DESIGN DRAWING NO.	PLATE
APPROVED FOR FABRICATION BY: FOR P.O.N.Y.A. DATE	DRAWN BY: gdc DATE NOV. 6, 1968	
APPROVED FOR FABRICATION BY: FOR FABRICATOR DATE	CHECKED BY: T.M.CHURA DATE NOV. 6, 1968	IN CHARGE OF PROD. DEV.
LACLEDE STEEL CO. DETAILED BY: A. CARL WEBER	FABRICATION CONT. NO. W.T.C. 221	SHEET NO. CD 217

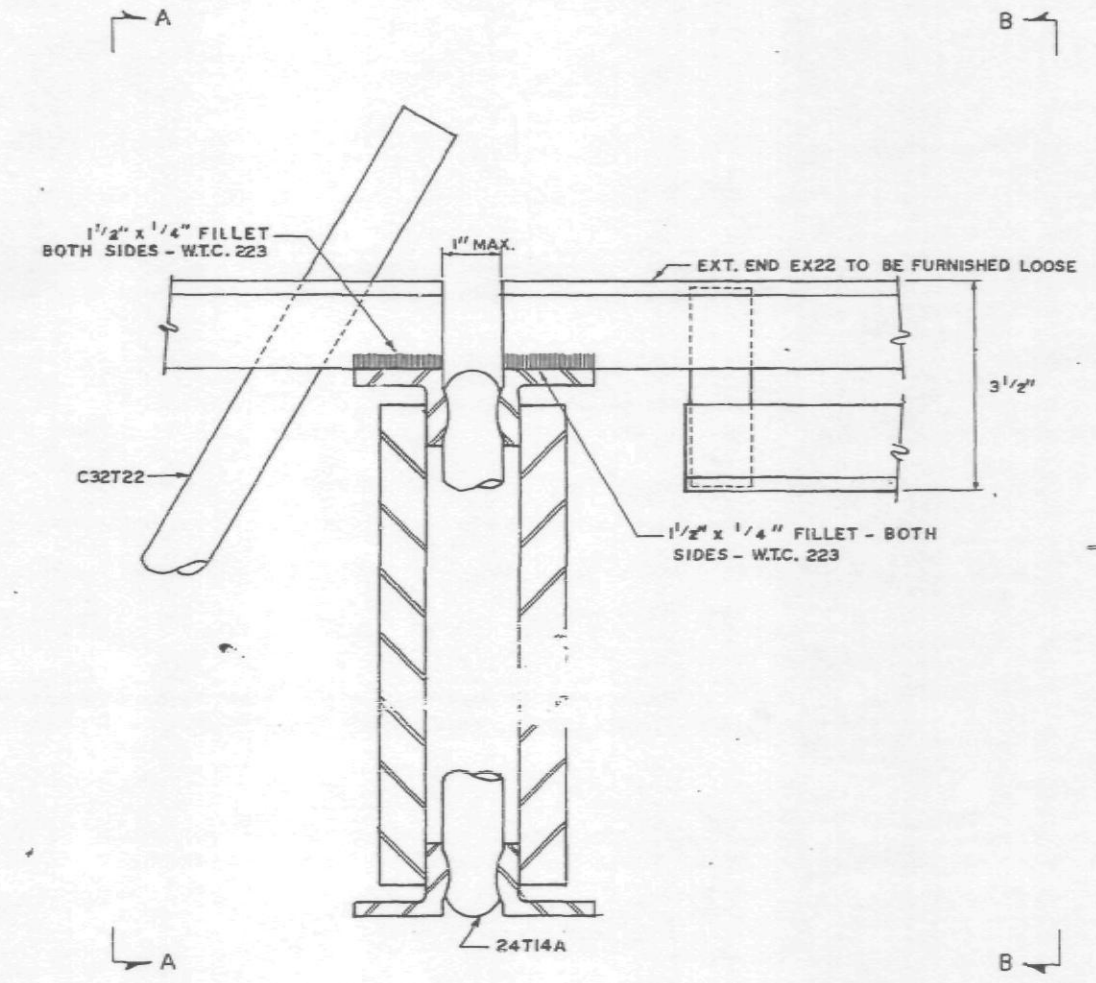

INTERIOR BRIDGING TRUSS CONNECTION (5-X)

24T14A TO C32T22 IN PANELS F2 & FR2

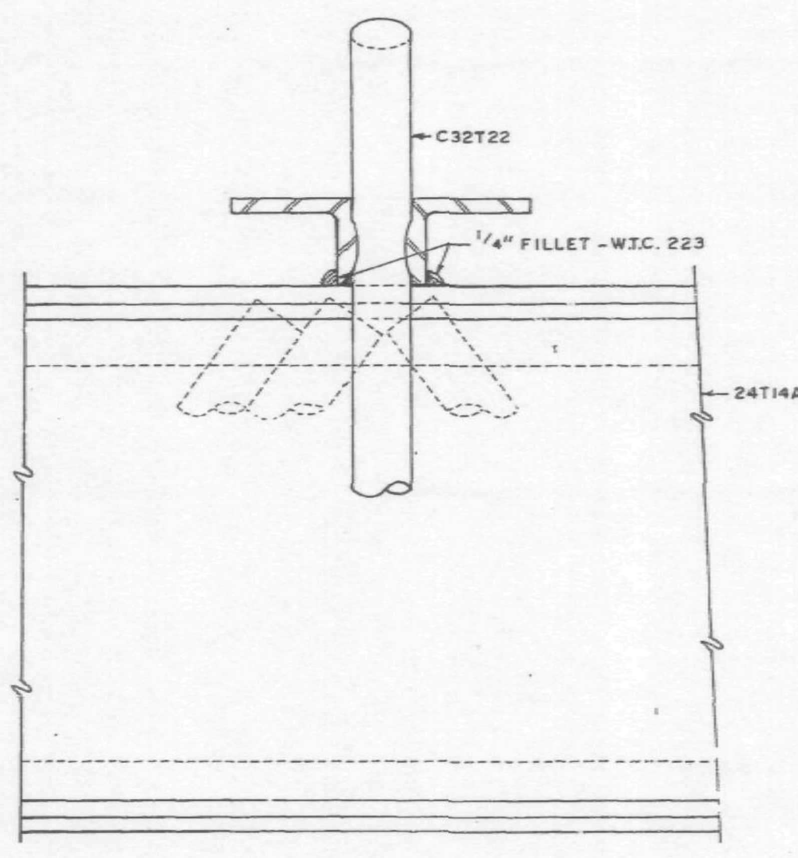

SECTION A-A

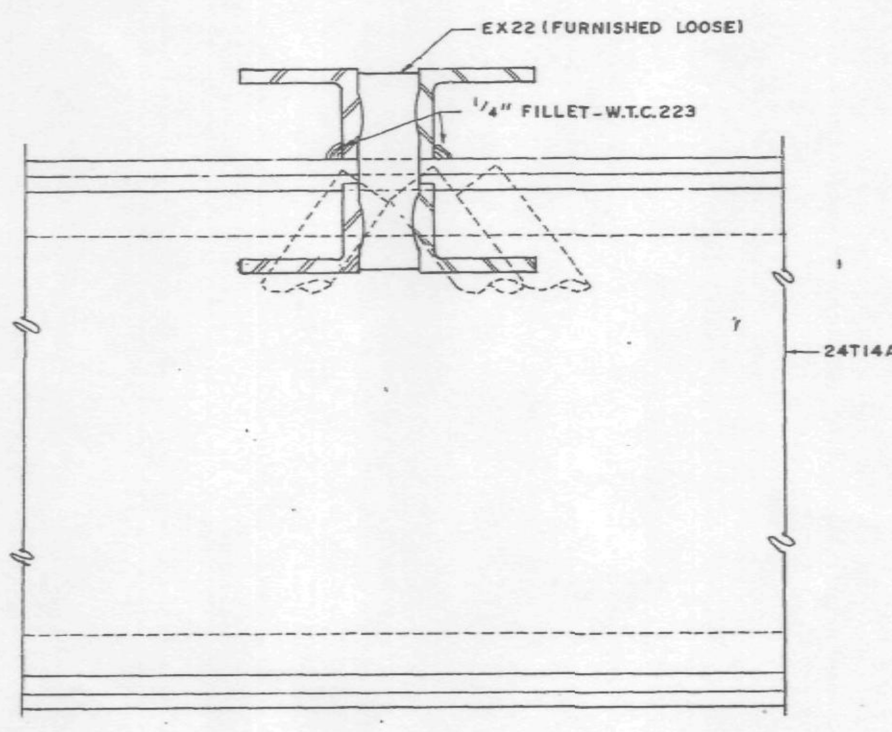

SECTION B-B

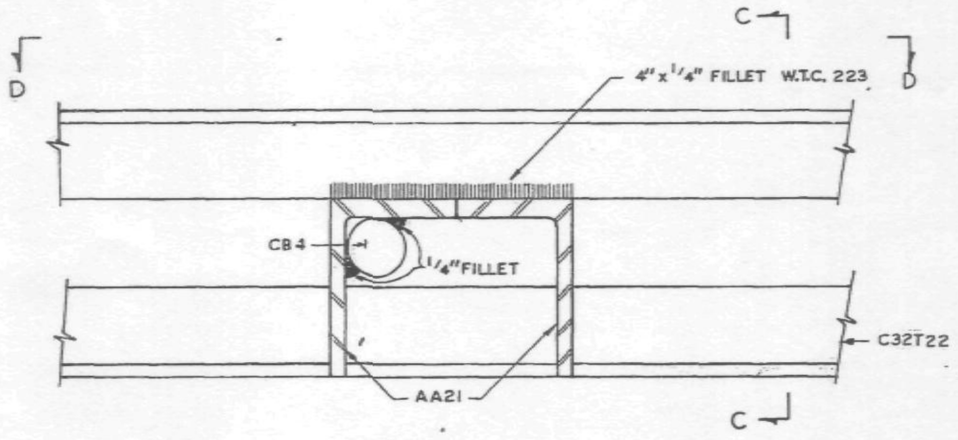

INTERIOR BRIDGING ANGLE CONNECTION (3-XA) (1)

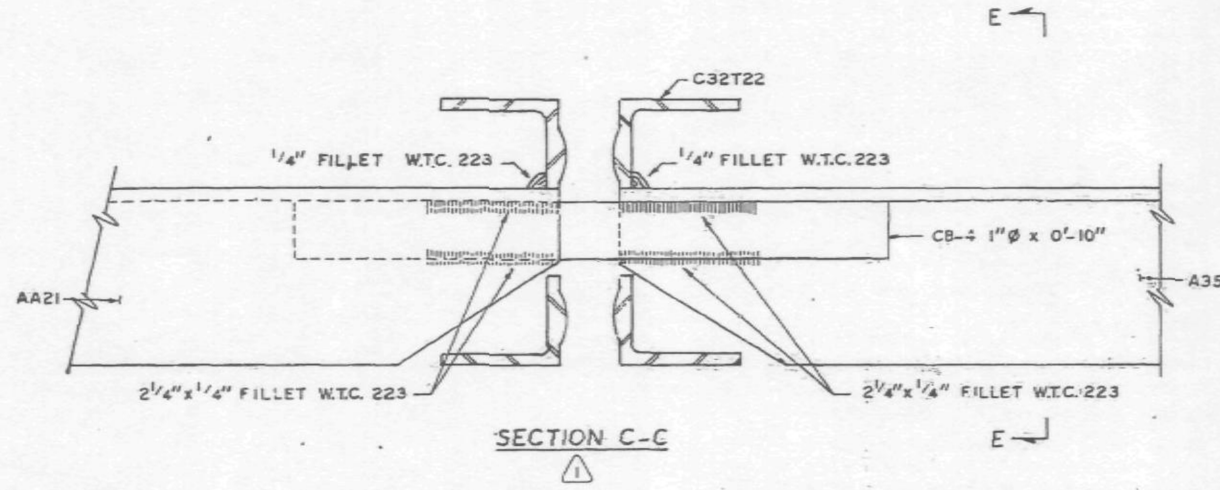

SECTION C-C (1)

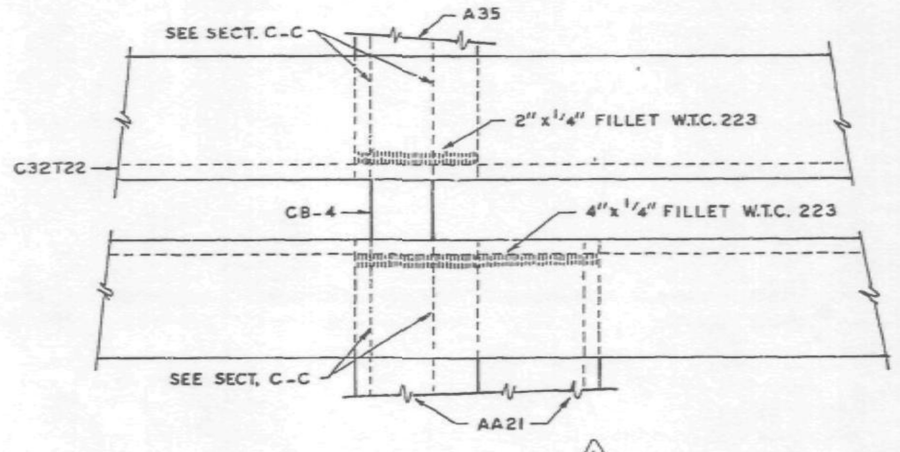

SECTION D-D (1)

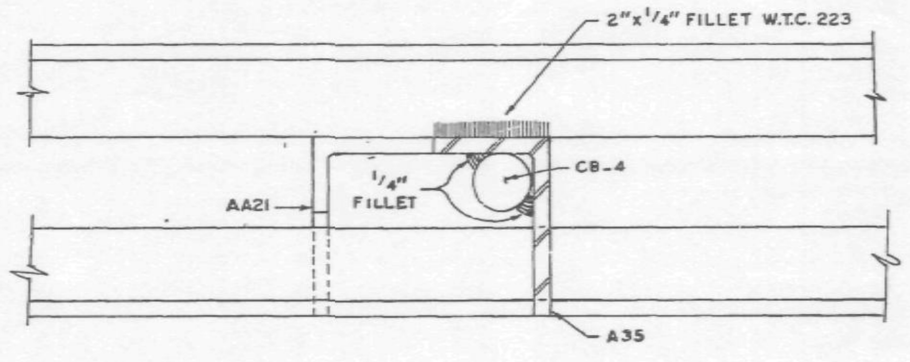

SECTION E-E (1)

(1)	1-9-69	AS NOTED	G.D.C.
NO.	DATE	REVISION	BY

ALL ARC WELDS TO BE MADE WITH LOW HYDROGEN RODS IN THE E-70 SERIES OR EQUAL.
SEE SHEET CD 211 FOR CONNECTION IDENTIFICATION LIST FOR FLOORS 25, 59 & 92.

CONNECTION DETAILS
FOR
WORLD TRADE CENTER - N.Y.C.
FOR
THE PORT OF NEW YORK AUTHORITY

CONNECTION DETAIL 5-X & 3-XA FOR FLOORS 25, 59 & 92.
WORLD TRADE CENTER TOWERS A & B

FABRICATION BY: LACLEDE STEEL COMPANY

FABRICATED AT MADISON, ILLINOIS		DESIGN DRAWING NO. 7-AB4-57	PLATE ______
APPROVED FOR FABRICATION BY: [signature] FOR P.O.N.Y.A.	DATE 1/31/69	DRAWN BY: G.D.C. DATE NOV. 18, 1968	
APPROVED FOR FABRICATION BY: ______ FOR FABRICATOR	DATE ______	CHECKED BY: T.M.CHURA DATE NOV. 18, 1968	IN CHARGE OF PROD. DEV.
DETAILED BY: A CARL WEBER		FABRICATION CONT. NO. W.T.C. 221	SHEET NO. CD 218

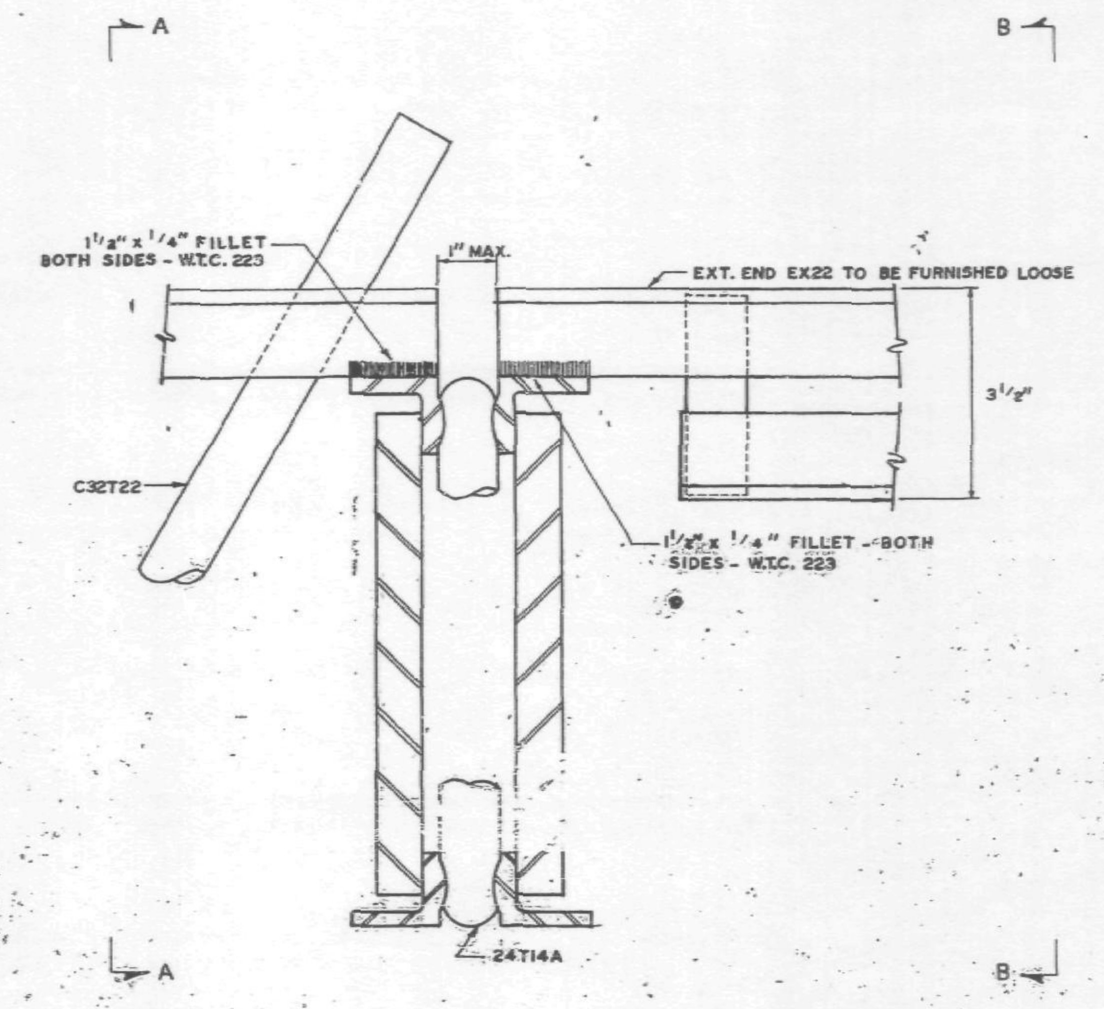

INTERIOR BRIDGING TRUSS CONNECTION (5-X)

24T14A TO C32T22 IN PANELS F2 & FR2

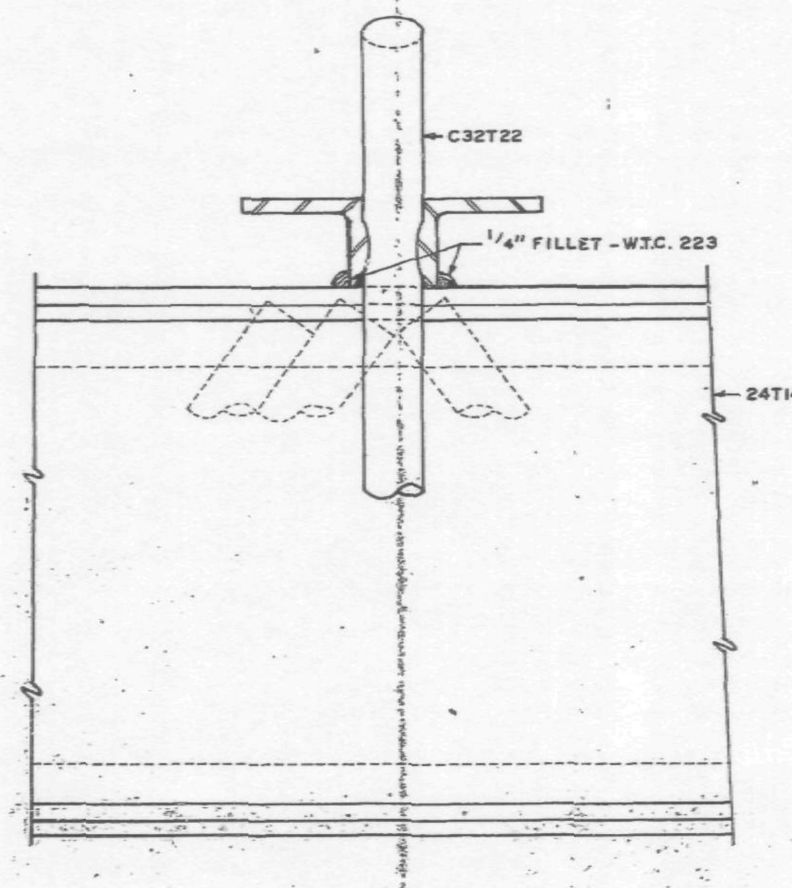

SECTION A-A

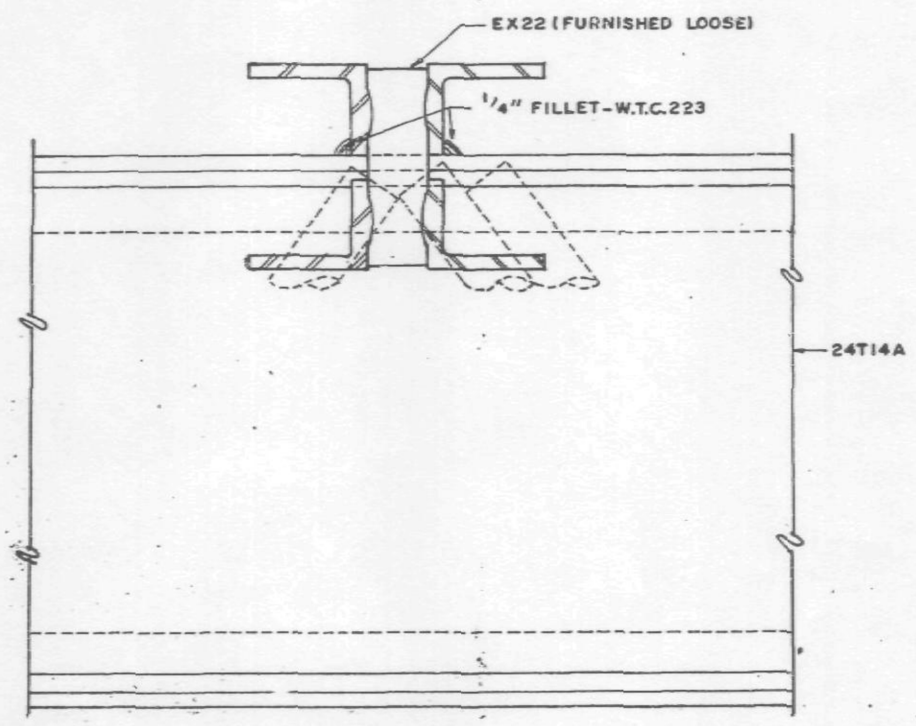

SECTION B-B

ALL ARC WELDS TO BE MADE WITH LOW HYDROGEN RODS IN THE E-70 SERIES OR EQUAL.
SEE SHEET CD 211 FOR CONNECTION IDENTIFICATION LIST FOR FLOORS 25, 59 & 92.

CONNECTION DETAILS
FOR
WORLD TRADE CENTER - N.Y.C.
FOR
THE PORT OF NEW YORK AUTHORITY

CONNECTION DETAIL 5-X FOR FLOORS 25, 59 & 92.
WORLD TRADE CENTER TOWERS A & B

FABRICATION BY: LACLEDE STEEL COMPANY

FABRICATED AT MADISON, ILLINOIS		DESIGN DRAWING NO. 7-A84-57	PLATE
APPROVED FOR FABRICATION BY: James White FOR P.O.N.Y.A.	DATE 12/6/68	DRAWN BY: G.D.C. DATE NOV. 18, 1968	
APPROVED FOR FABRICATION BY: FOR FABRICATOR	DATE	CHECKED BY: T.M.CHURA DATE NOV. 18, 1968	IN CHARGE OF PROD. DEV.
DETAILED BY: CARL WEBER (LACLEDE STEEL CO.)		FABRICATION CONT. NO. W.T.C. 221	SHEET NO. CD 218

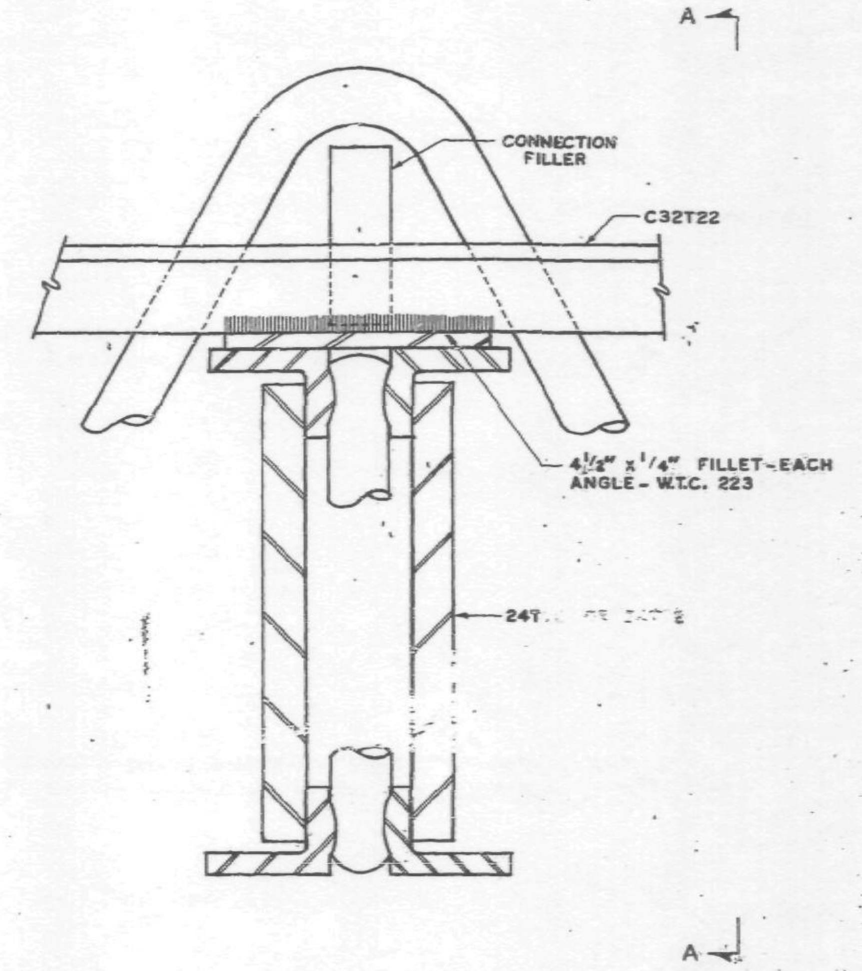

INTERIOR BRIDGING TRUSS CONNECTION (6-X)

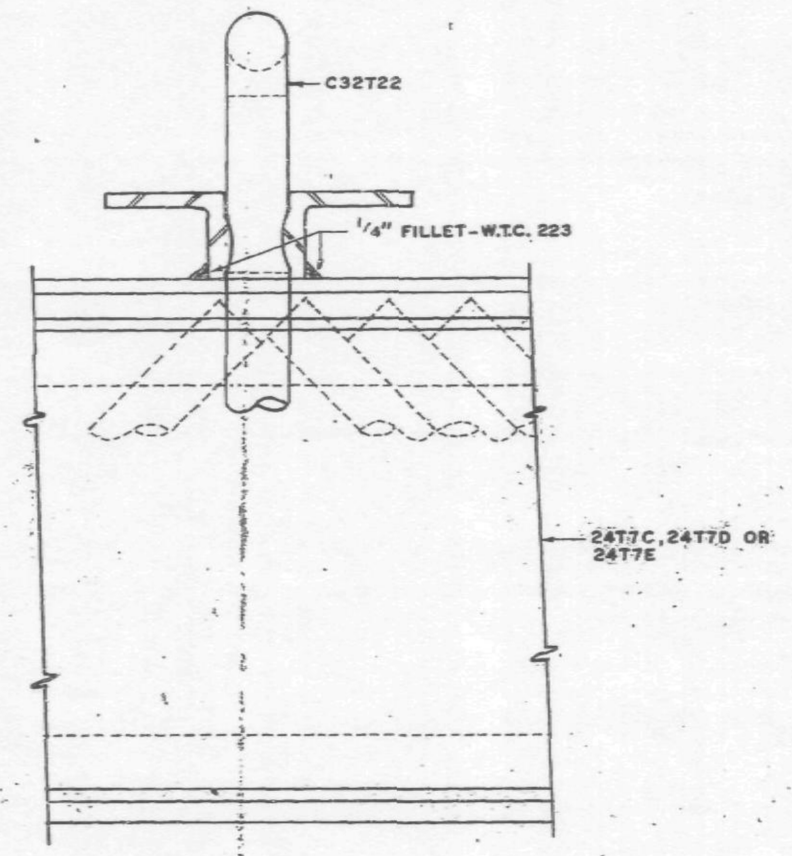

SECTION A-A

DETAIL "A"

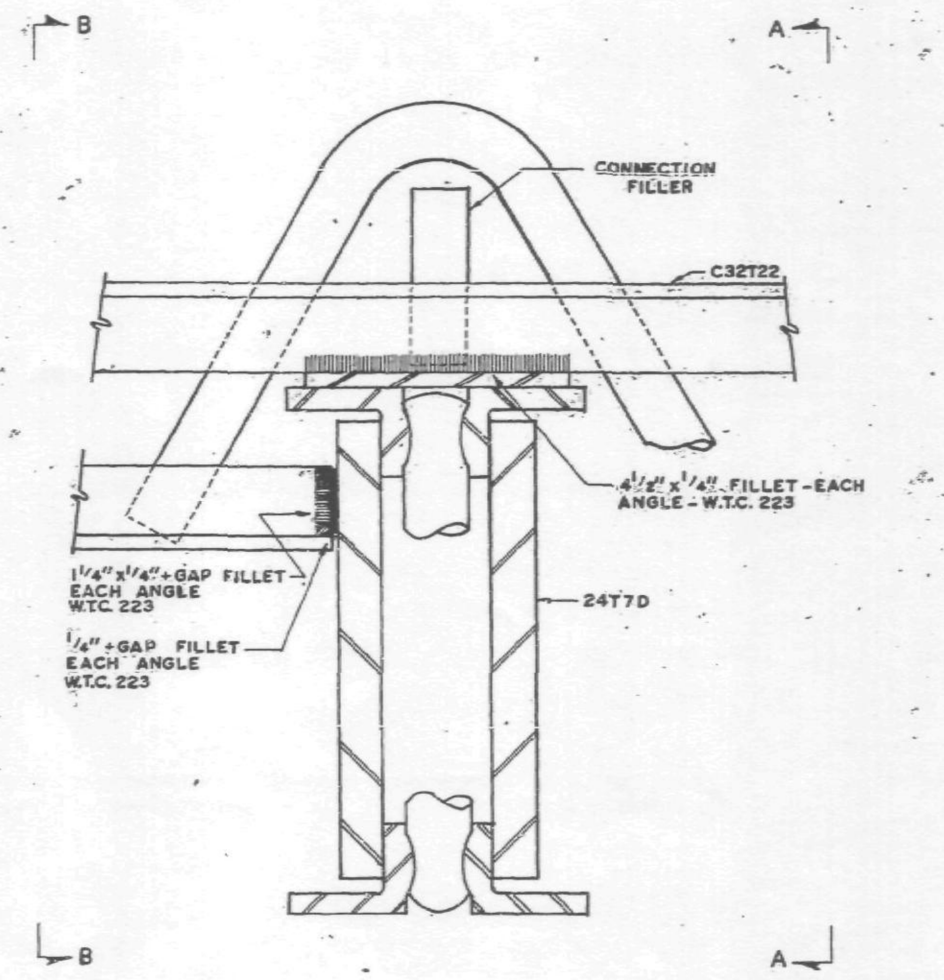

INTERIOR BRIDGING TRUSS CONNECTION (6-XA)

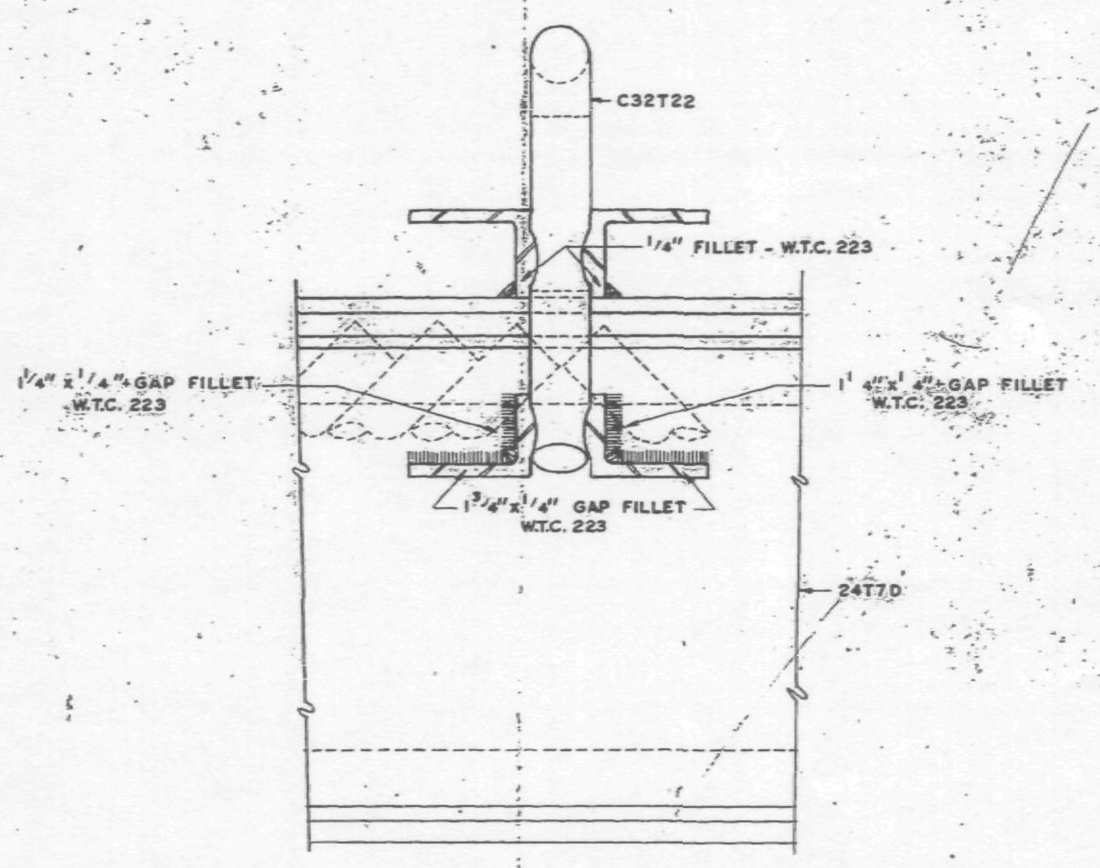

SECTION B-B

ALL ARC WELDS TO BE MADE WITH LOW HYDROGEN RODS IN THE E-70 SERIES OR EQUAL.
SEE SHEET CD 211 FOR LIST OF FLOOR CONNECTION IDENTIFICATIONS FOR FLOORS 25, 59 & 92.
SEE DETAIL A, THIS SHEET, FOR ALL +GAP FILLET WELDS.

CONNECTION DETAILS
FOR
WORLD TRADE CENTER. - N.Y.C.
FOR
THE PORT OF NEW YORK AUTHORITY

CONNECTION DETAILS 6-X & 6-XA FOR FLOORS 25, 59 & 92
WORLD TRADE CENTER TOWERS A & B

FABRICATION BY: LACLEDE STEEL COMPANY

FABRICATED AT MADISON, ILLINOIS		DESIGN DRAWING NO. 7-A84-59	PLATE
APPROVED FOR FABRICATION BY: [signature] FOR P.O.N.Y.A.	DATE 12/6/68	DRAWN BY: G.D.C. DATE NOV. 19, 1968	
APPROVED FOR FABRICATION BY: FOR FABRICATOR	DATE	CHECKED BY: T.M.CHURA DATE NOV. 19, 1968	IN CHARGE OF PROD. DEV.
LACLEDE STEEL CO. DETAILED BY: A. CARL WEBER		FABRICATION CONT. NO. W.T.C. 221	SHEET NO. CD 219

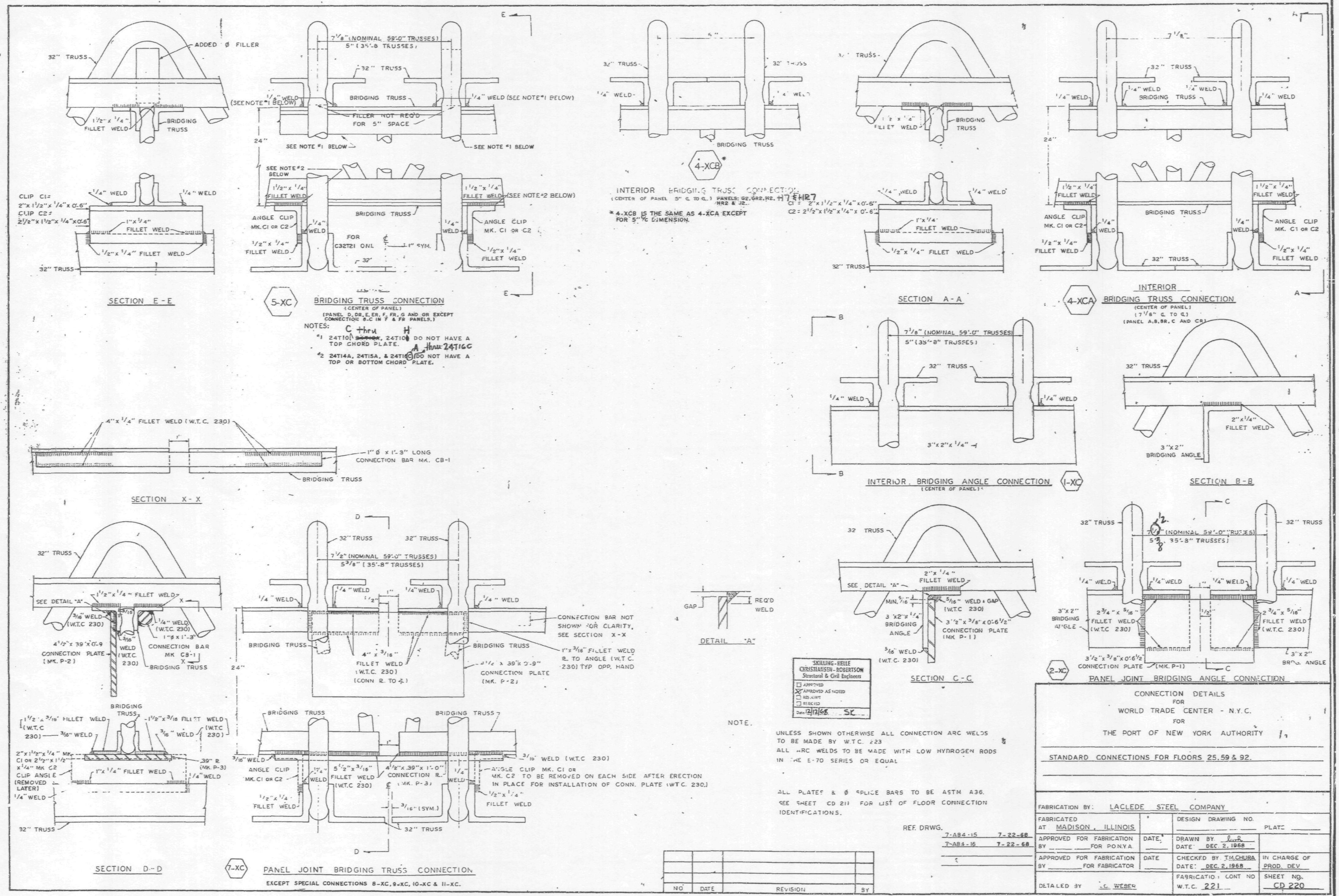
SECTION E-E
32" TRUSS
ADDED Ø FILLER
1/2" x 1/4" FILLET WELD
BRIDGING TRUSS
CLIP C1= 2"x1 1/2"x 1/4"x 0'-6"
CLIP C2= 2 1/2"x 1 1/2"x 1/4"x 0'-6"
1/4" WELD
1"x 1/4" FILLET WELD
1/2"x 1/4" FILLET WELD
5-XC
BRIDGING TRUSS CONNECTION
(CENTER OF PANEL)
(PANEL D, DR, E, ER, F, FR, G AND GR EXCEPT CONNECTION 8-C IN F & FR PANELS.)
7 1/8" (NOMINAL 59'-0" TRUSSES)
5" (35'-8 TRUSSES)
FILLER NOT REQ'D FOR 5" SPACE
1/4" WELD (SEE NOTE #1 BELOW)
SEE NOTE #1 BELOW
SEE NOTE #2 BELOW
1 1/2"x 1/4" FILLET WELD (SEE NOTE #2 BELOW)
ANGLE CLIP MK. C1 OR C2
FOR C32T21 ONLY
1" SYM.
NOTES:
#1 24T10, 24T10 DO NOT HAVE A TOP CHORD PLATE.
#2 24T14A, 24T15A, & 24T16 DO NOT HAVE A TOP OR BOTTOM CHORD PLATE.
C thru H
A thru 24T16C
4-XCB
INTERIOR BRIDGING TRUSS CONNECTION
(CENTER OF PANEL 5" C TO C) PANELS: G2, GR2, H2, HR2 & J2.
H7 & HR7
C1 = 2"x1 1/2"x 1/4"x 0'-6"
C2 = 2 1/2"x1 1/2"x 1/4"x 0'-6"
* 4-XCB IS THE SAME AS 4-XCA EXCEPT FOR 5" C DIMENSION.
SECTION A-A
4-XCA
INTERIOR BRIDGING TRUSS CONNECTION
(CENTER OF PANEL)
(7 1/8" C TO C)
(PANEL A, B, BR, C AND CR)
SECTION X-X
4"x 1/4" FILLET WELD (W.T.C. 230)
1" Ø x 1'-3" LONG CONNECTION BAR MK. CB-1
BRIDGING TRUSS
INTERIOR BRIDGING ANGLE CONNECTION
(CENTER OF PANEL)
1-XC
3"x2"x 1/4"
SECTION B-B
2"x 1/4" FILLET WELD
3"x2" BRIDGING ANGLE
SECTION D-D
SEE DETAIL "A"
1 1/2"x 3/16" FILLET WELD
3/16" WELD (W.T.C 230)
1/4" WELD (W.T.C. 230)
1" Ø x 1'-3"
4 1/2"x 39"x 0'-9 CONNECTION PLATE (MK. P-2)
CONNECTION BAR MK CB-1
2"x1 1/2"x 1/4" MK C1 OR 2 1/2"x1 1/2"x 1/4" MK C2 CLIP ANGLE (REMOVED LATER)
.39" R (MK. P-3)
1"x 1/4" FILLET WELD
7-XC
PANEL JOINT BRIDGING TRUSS CONNECTION
EXCEPT SPECIAL CONNECTIONS 8-XC, 9-XC, 10-XC & 11-XC.
7 1/2" (NOMINAL 59'-0" TRUSSES)
5 3/8" (35'-8" TRUSSES)
4"x 3/16" FILLET WELD (W.T.C. 230) (CONN R. TO C)
3 1/2" x 39"x 0'-9" CONNECTION PLATE (MK. P-2)
CONNECTION BAR NOT SHOWN FOR CLARITY, SEE SECTION X-X
1"x 3/16" FILLET WELD R. TO ANGLE (W.T.C. 230) TYP. OPP. HAND
5 1/2"x 3/16" FILLET WELD (W.T.C 230)
4 1/2"x 39"x 1'-0" CONNECTION R. (MK. P-3)
3/16" WELD (W.T.C 230)
ANGLE CLIP MK. C1 OR MK. C2 TO BE REMOVED ON EACH SIDE AFTER ERECTION IN PLACE FOR INSTALLATION OF CONN. PLATE (W.T.C. 230)
3/16" (SYM.)
DETAIL "A"
GAP
REQ'D WELD
SECTION C-C
2"x 1/4" FILLET WELD
MIN. 5/16
5/16" WELD & GAP (W.T.C 230)
3 1/2"x 3/8"x 0'-6 1/2" CONNECTION PLATE (MK P-1)
3"x2"x 1/4" BRIDGING ANGLE
5/16" WELD (W.T.C 230)
2-XC
PANEL JOINT BRIDGING ANGLE CONNECTION
7 1/2" (NOMINAL 59'-0" TRUSSES)
5 3/8" 35'-8" TRUSSES)
2 3/4"x 5/16" FILLET WELD (W.T.C 230)
3 1/2"x 3/8"x 0'-6 1/2" CONNECTION PLATE (MK. P-1)
3"x2" BRDG. ANGLE
SKILLING-HELLE CHRISTIANSEN-ROBERTSON Structural & Civil Engineers
APPROVED
APPROVED AS NOTED
RESUBMIT
REJECTED
Date 12/12/68 SC
NOTE.
UNLESS SHOWN OTHERWISE ALL CONNECTION ARC WELDS TO BE MADE BY W.T.C. 223
ALL ARC WELDS TO BE MADE WITH LOW HYDROGEN RODS IN THE E-70 SERIES OR EQUAL
ALL PLATES & Ø SPLICE BARS TO BE ASTM A36.
SEE SHEET CD 211 FOR LIST OF FLOOR CONNECTION IDENTIFICATIONS.
REF. DRWG.
7-A84-15 7-22-68
7-A84-16 7-22-68
NO DATE REVISION BY
CONNECTION DETAILS FOR WORLD TRADE CENTER - N.Y.C. FOR THE PORT OF NEW YORK AUTHORITY
STANDARD CONNECTIONS FOR FLOORS 25, 59 & 92.
FABRICATION BY: LACLEDE STEEL COMPANY
FABRICATED AT MADISON, ILLINOIS
DESIGN DRAWING NO.
PLATE
APPROVED FOR FABRICATION BY FOR P.O.N.Y.A. DATE
DRAWN BY L.H. DATE DEC. 2, 1968
APPROVED FOR FABRICATION BY FOR FABRICATOR DATE
CHECKED BY T.M.CHURA DATE DEC. 2, 1968
IN CHARGE OF PROD. DEV.
DETAILED BY L.C. WEBER
FABRICATION CONT NO W.T.C. 221
SHEET NO. CD 220

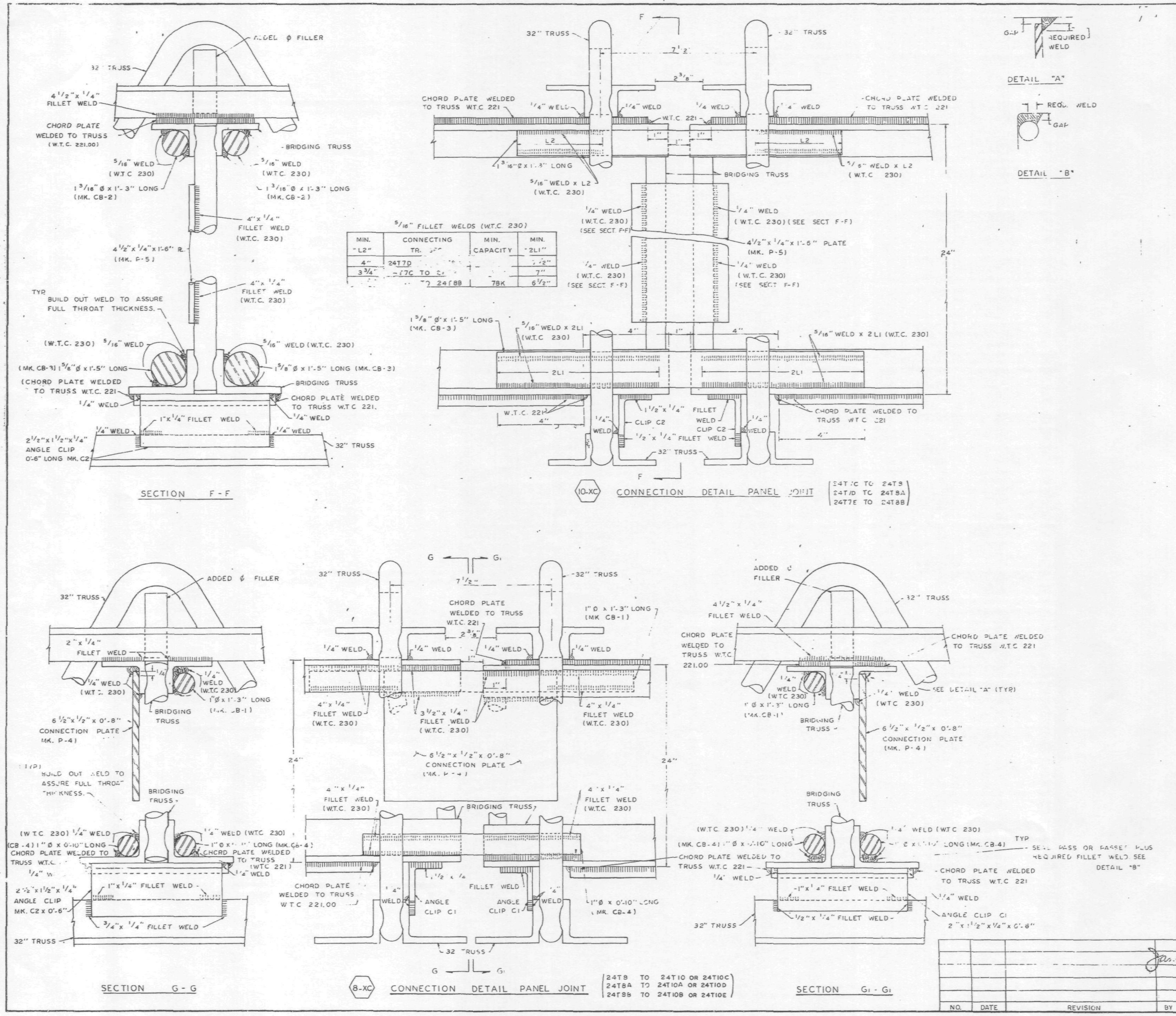

5/16" FILLET WELDS (W.T.C. 230)

MIN. "L2"	CONNECTING TR. [illegible]	MIN. CAPACITY	MIN. "2L1"
4"	24T7D [illegible]	[illegible]	[illegible]
3 3/4"	[illegible]7C TO [illegible]	[illegible]	7"
[illegible]	[illegible] TO 24T8B	78K	6 1/2"

REF. DRWG.

7-A84-18	7-22-68
7-A84-18.1	7-22-68

NOTE.
1. UNLESS SHOWN OTHERWISE ALL CONNECTION ARC WELDS TO BE MADE BY W.T.C. 223.
2. ALL ARC WELDS TO BE MADE WITH LOW HYDROGEN RODS IN THE E-70 SERIES OR EQUAL.
3. ALL PLATES & ¢ SPLICE BARS TO BE ASTM A36

CONNECTION DETAILS
FOR
WORLD TRADE CENTER - N.Y.C.
FOR
THE PORT OF NEW YORK AUTHORITY

STANDARD CONNECTION DETAILS 8-XC & 10-XC

FABRICATION BY: LACLEDE STEEL COMPANY
FABRICATED AT MADISON, ILLINOIS
DESIGN DRAWING NO. PLATE
APPROVED FOR FABRICATION BY [signature] FOR P.O.N.Y.A — DATE 1/31/69
DRAWN BY — DATE: JAN. 13, 1969
APPROVED FOR FABRICATION BY ____ FOR FABRICATOR — DATE
CHECKED BY: T.M. CHURA — DATE: JAN. 13, 1969
IN CHARGE OF PROD. DEV.
FABRICATION CONT. NO W.T.C. 221
SHEET NO CD 221
DETAILED BY: A.C. WEBER

NO.	DATE	REVISION	BY

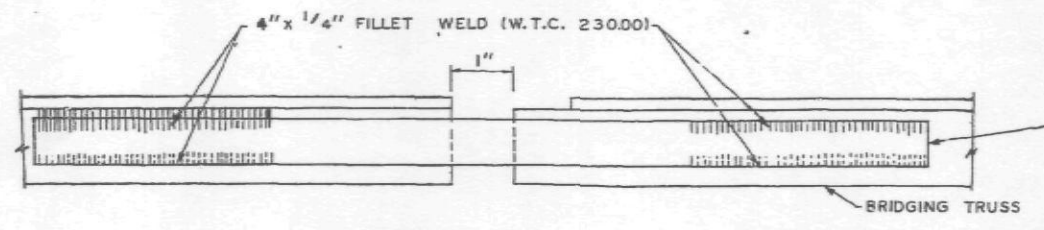

SECTION A-A

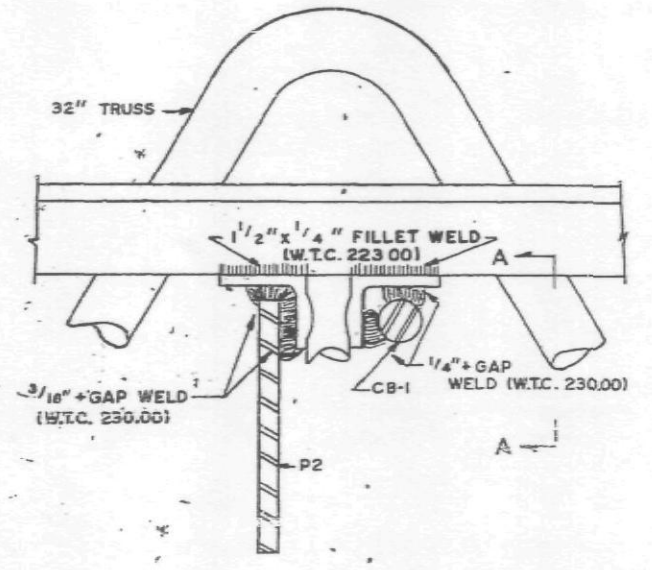

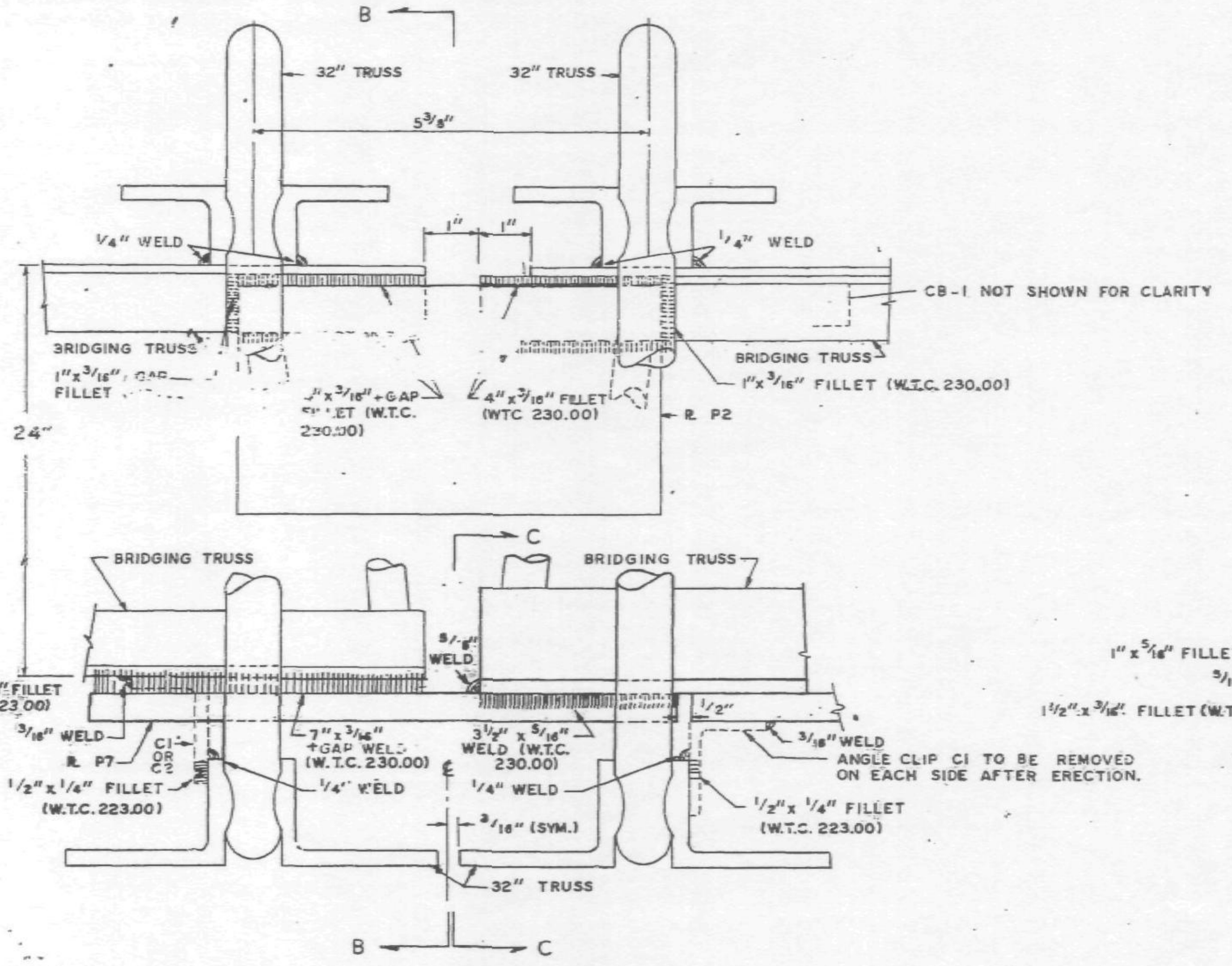

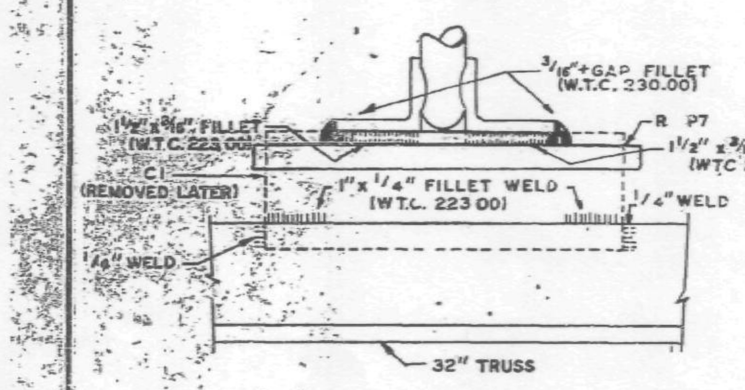

SECTION B-B

9-XC PANEL JOINT BRIDGING TRUSS CONNECTION

24T9 TO 24T11A
24T9A TO 24T11C

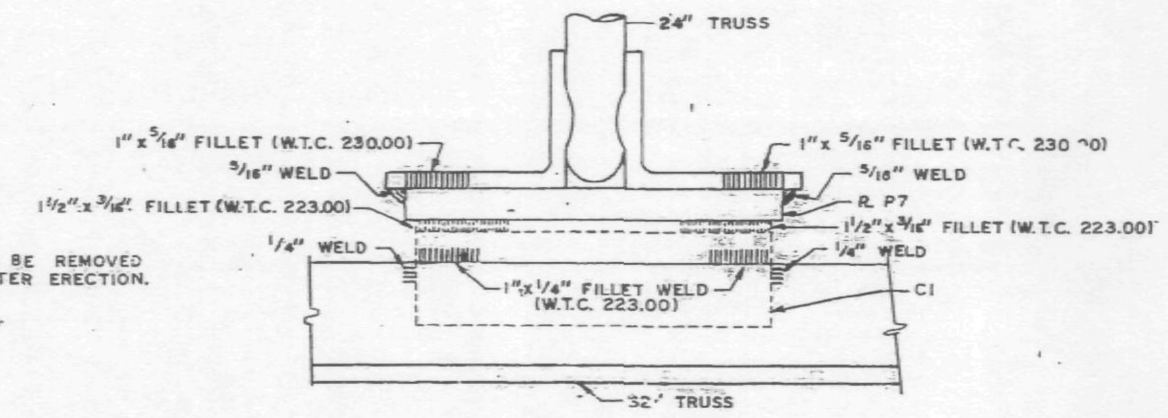

SECTION C-C

FOR NOTES SEE SHEET CD 220.

CONNECTION DETAILS
FOR
WORLD TRADE CENTER - N.Y.C.
FOR
THE PORT OF NEW YORK AUTHORITY

CONNECTION DETAIL 9-XC

FABRICATION BY LACLEDE STEEL COMPANY			
FABRICATED AT MADISON, ILLINOIS		DESIGN DRAWING NO.	PLATE
APPROVED FOR FABRICATION BY FOR PONYA	DATE 1/31/69	DRAWN BY: gdc DATE JAN. 13, 1969	
APPROVED FOR FABRICATION BY FOR FABRICATOR	DATE	CHECKED BY T.R. CHURA DATE JAN. 13, 1969	IN CHARGE OF PROD. DEV.
DETAILED BY A.C. WEBER — LACLEDE STEEL CO.		FABRICATION CONT NO. WTC 221	SHEET NO. CD 222

NO.	DATE	REVISION	BY

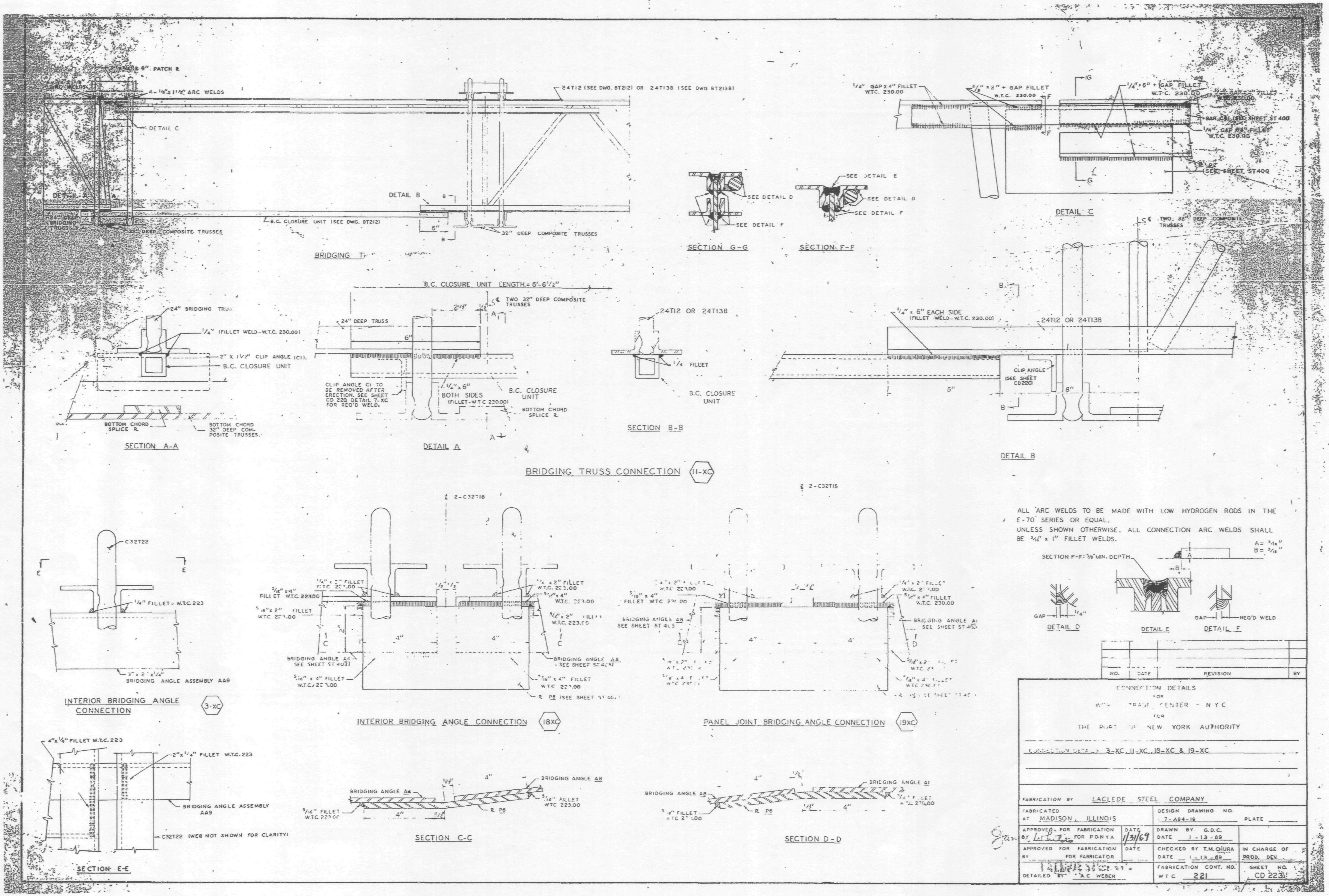
9" PATCH R
4 - 1/4" x 1 1/2" ARC WELDS
DETAIL C
24T12 (SEE DWG. BT212) OR 24T138 (SEE DWG BT213B)
DETAIL A
DETAIL B
B.C. CLOSURE UNIT (SEE DWG. BT212)
32" DEEP COMPOSITE TRUSSES
24" DEEP BRIDGING TRUSS
BRIDGING TRUSS ELEVATION
SEE DETAIL D
SEE DETAIL E
SEE DETAIL F
SECTION G-G
SECTION F-F
1/4" GAP x 4" FILLET W.T.C. 230.00
5/16" x 2" + GAP FILLET W.T.C. 230.00
1/4" x 6" + GAP FILLET W.T.C. 230.00
BAR C61 (SEE SHEET ST400)
SEE SHEET ST400
DETAIL C
TWO 32" DEEP COMPOSITE TRUSSES
B.C. CLOSURE UNIT LENGTH = 6'-6 1/2"
24" BRIDGING TRUSS
1/4" (FILLET WELD - W.T.C. 230.00)
2" x 1 1/2" CLIP ANGLE (C1)
B.C. CLOSURE UNIT
BOTTOM CHORD SPLICE R
BOTTOM CHORD 32" DEEP COMPOSITE TRUSSES
SECTION A-A
24" DEEP TRUSS
CLIP ANGLE C1 TO BE REMOVED AFTER ERECTION. SEE SHEET CD 220 DETAIL 7-XC FOR REQ'D WELD.
1/4" x 6" BOTH SIDES (FILLET - W.T.C 230.00)
B.C. CLOSURE UNIT
BOTTOM CHORD SPLICE R
DETAIL A
24T12 OR 24T138
1/4 FILLET
B.C. CLOSURE UNIT
SECTION B-B
1/4" x 6" EACH SIDE (FILLET WELD - W.T.C. 230.00)
24T12 OR 24T138
CLIP ANGLE (SEE SHEET CD220)
DETAIL B
BRIDGING TRUSS CONNECTION (11-XC)
ALL ARC WELDS TO BE MADE WITH LOW HYDROGEN RODS IN THE E-70 SERIES OR EQUAL.
UNLESS SHOWN OTHERWISE, ALL CONNECTION ARC WELDS SHALL BE 3/16" x 1" FILLET WELDS.
SECTION F-F: 3/8" MIN. DEPTH
A = 3/16"
B = 3/16"
DETAIL D
DETAIL E
DETAIL F
REQ'D WELD
C32T22
1/4" FILLET - W.T.C. 223
3" x 2" x 1/4" BRIDGING ANGLE ASSEMBLY AA9
INTERIOR BRIDGING ANGLE CONNECTION (3-XC)
2-C32T18
BRIDGING ANGLE A4 SEE SHEET ST403
BRIDGING ANGLE A8
R P6 (SEE SHEET ST403)
INTERIOR BRIDGING ANGLE CONNECTION (18XC)
2-C32T15
BRIDGING ANGLE A8 SEE SHEET ST403
BRIDGING ANGLE A1 SEE SHEET ST403
PANEL JOINT BRIDGING ANGLE CONNECTION (19XC)
4" x 1/4" FILLET W.T.C. 223
2" x 1/4" FILLET W.T.C. 223
BRIDGING ANGLE ASSEMBLY AA9
C32T22 (WEB NOT SHOWN FOR CLARITY)
SECTION E-E
BRIDGING ANGLE A4
5/16" FILLET W.T.C. 223.00
R P6
SECTION C-C
BRIDGING ANGLE A8
BRIDGING ANGLE A1
SECTION D-D
NO. | DATE | REVISION | BY
CONNECTION DETAILS FOR WORLD TRADE CENTER - N.Y.C. FOR THE PORT OF NEW YORK AUTHORITY
CONNECTION DETAILS 3-XC, 11-XC, 18-XC & 19-XC
FABRICATION BY LACLEDE STEEL COMPANY
FABRICATED AT MADISON, ILLINOIS
DESIGN DRAWING NO. 7-A84-19
PLATE
APPROVED FOR FABRICATION FOR PONYA
DATE 1/31/69
DRAWN BY G.D.C. DATE 1-13-69
APPROVED FOR FABRICATION FOR FABRICATOR
CHECKED BY T.M. CHURA DATE 1-13-69
IN CHARGE OF PROD. DEV.
DETAILED BY A.C. WEBER
FABRICATION CONT. NO. WTC 221
SHEET NO. CD 223

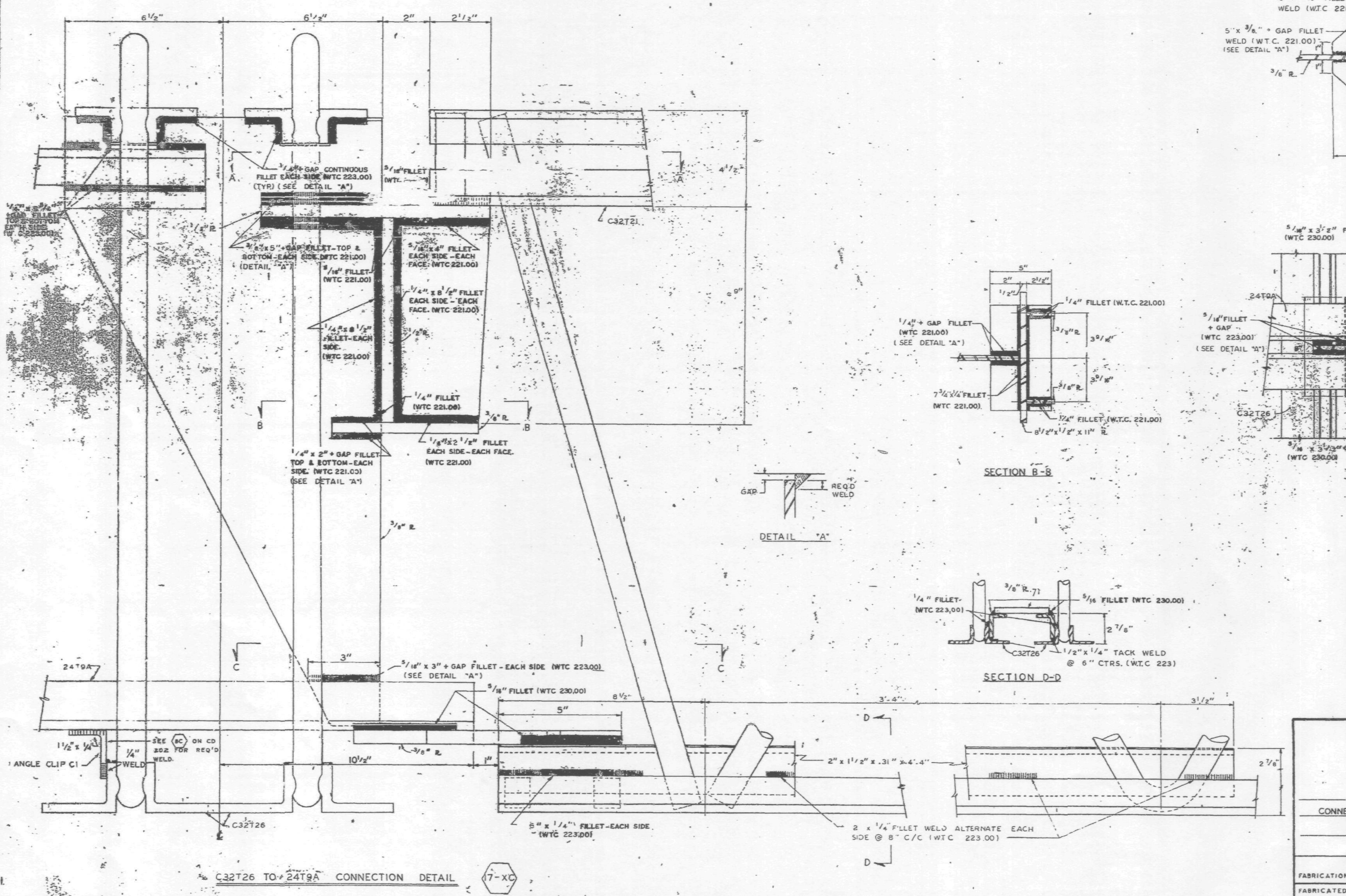

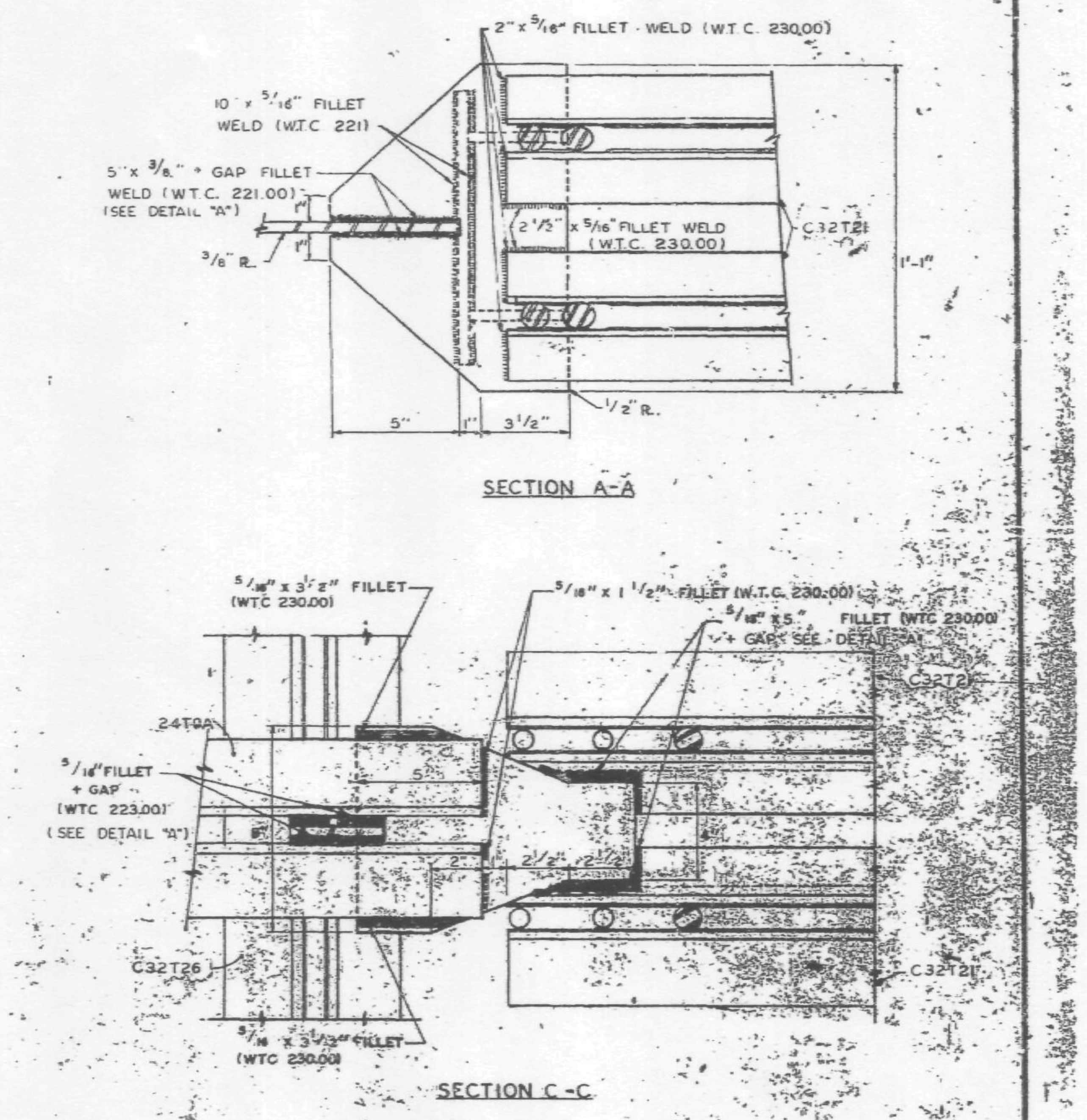

ALL ARC WELDS TO BE MADE WITH LOW HYDROGEN RODS IN THE E-70 SERIES OR EQUAL.
ALL PLATES TO BE GRADE A36 STEEL.

REF. DWGS.	
7-AB4-11.2	7-22-68
7-AB4-11.1	7-22-68
7-AB2-4	7-22-68
7-AB1-12	7-22-68
7-AB1-9	7-22-68

CONNECTION DETAILS
FOR
WORLD TRADE CENTER - N.Y.C.
FOR
THE PORT OF NEW YORK AUTHORITY

CONNECTION BETWEEN C32T21 AND 24T9A 17-XC

FABRICATION BY: LACLEDE STEEL COMPANY

FABRICATED AT MADISON, ILLINOIS		DESIGN DRAWING NO. 7-AB4-11.2	PLATE
APPROVED FOR FABRICATION BY James White FOR P.O.N.Y.A.	DATE 1/31/69	DRAWN BY: gdc DATE DEC 27 1968	
APPROVED FOR FABRICATION BY FOR FABRICATOR	DATE	CHECKED BY T.M. CHURA DATE DEC 27, 1968	IN CHARGE OF PROD. DEV.
LACLEDE STEEL CO. DETAILED BY A.C. WEBER		FABRICATION CONT. NO. WTC 221	SHEET NO. CD-225

NO.	DATE	REVISION	BY

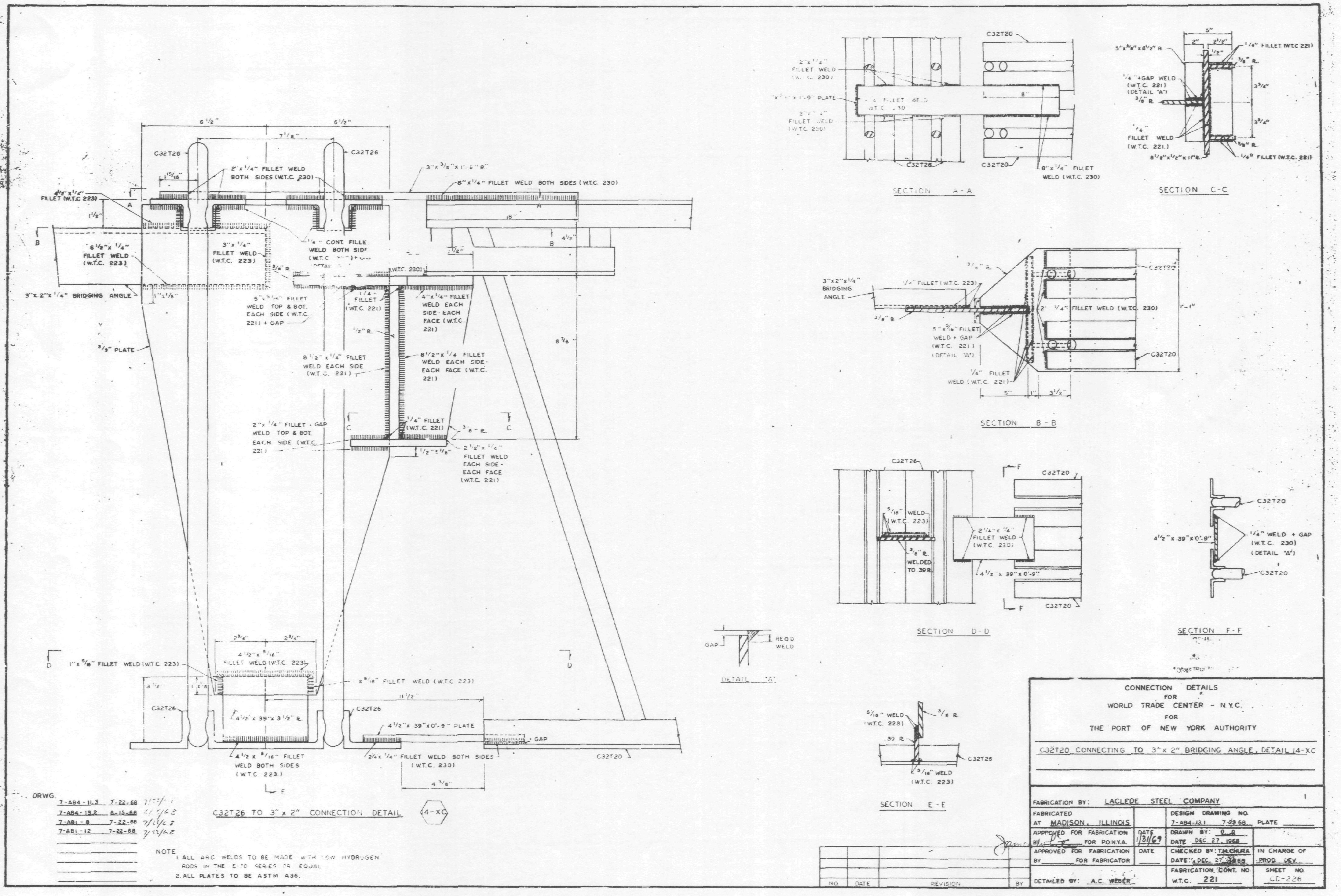
CONNECTION DETAILS
FOR
WORLD TRADE CENTER - N.Y.C.
FOR
THE PORT OF NEW YORK AUTHORITY
C32T20 CONNECTING TO 3" x 2" BRIDGING ANGLE, DETAIL 14-XC
FABRICATION BY: LACLEDE STEEL COMPANY
FABRICATED AT MADISON, ILLINOIS
APPROVED FOR FABRICATION FOR P.O.N.Y.A.
DATE 1/31/69
APPROVED FOR FABRICATION BY FOR FABRICATOR
DETAILED BY: A.C. WEBER
DESIGN DRAWING NO. 7-A84-13.1 7-22-68 PLATE
DRAWN BY: D.R. DATE DEC. 27, 1968
CHECKED BY: T.M.CHURA DATE DEC. 27, 1968
IN CHARGE OF PROD. DEV.
FABRICATION CONT. NO. W.T.C. 221
SHEET NO. CE-226
NO DATE REVISION BY
DRWG.
7-A84-11.3 7-22-68
7-A84-13.2 6-15-68
7-A81-8 7-22-68
7-A81-12 7-22-68
C32T26 TO 3" x 2" CONNECTION DETAIL 14-XC
NOTE
1. ALL ARC WELDS TO BE MADE WITH LOW HYDROGEN RODS IN THE E-70 SERIES OR EQUAL.
2. ALL PLATES TO BE ASTM A36.
SECTION A-A
SECTION B-B
SECTION C-C
SECTION D-D
SECTION E-E
SECTION F-F
DETAIL "A"
C32T26
C32T20
3"x2"x1/4" BRIDGING ANGLE
3/8" PLATE
8"x1/4" FILLET WELD BOTH SIDES (W.T.C. 230)
2"x1/4" FILLET WELD BOTH SIDES (W.T.C. 230)
4 1/2"x 39"x 0'-9" PLATE
2 1/4 x 1/4" FILLET WELD BOTH SIDES (W.T.C. 230)
4 1/2 x 5/16" FILLET WELD BOTH SIDES (W.T.C. 223)
1"x 5/16" FILLET WELD (W.T.C. 223)
GAP
REQ'D WELD

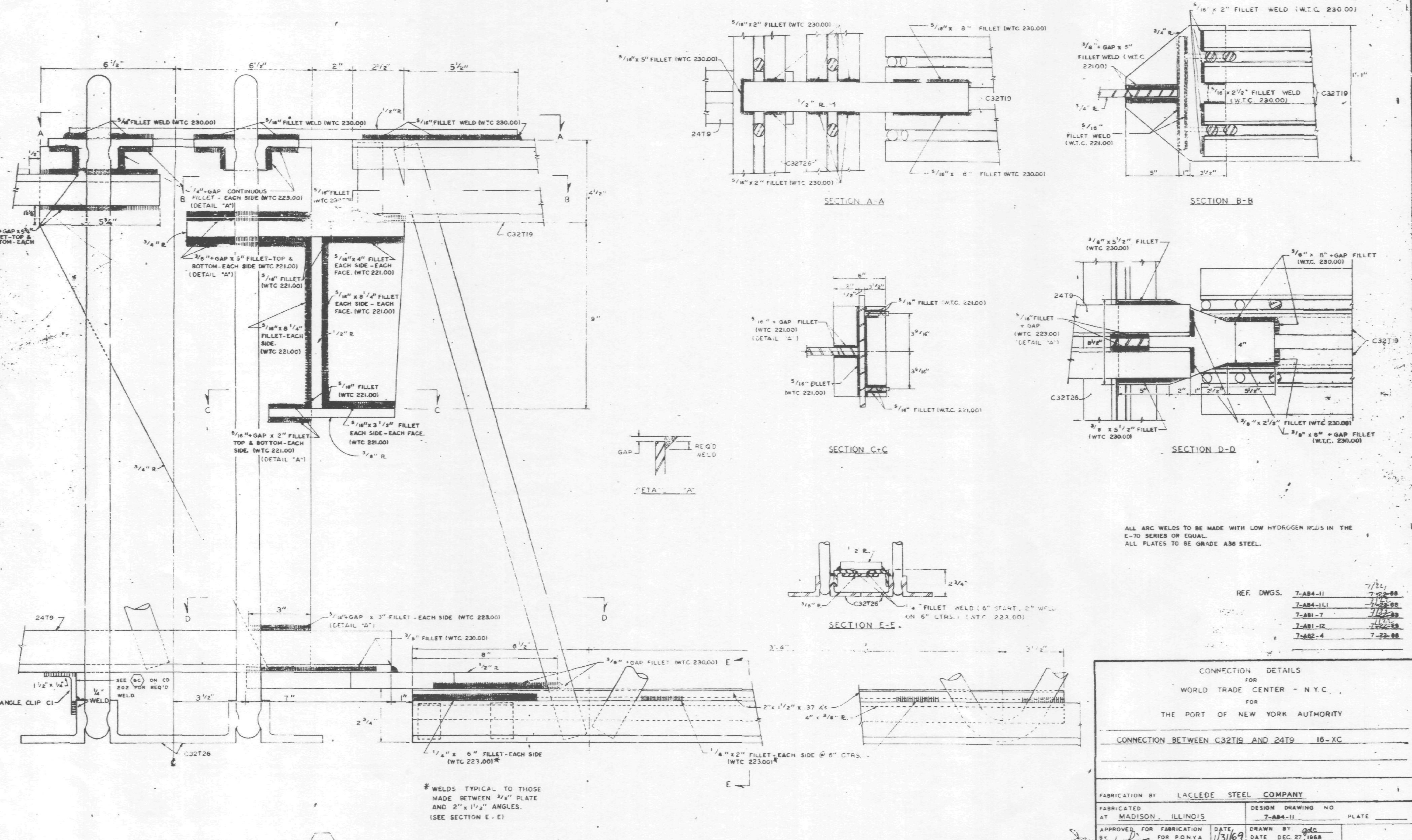

C32T26 TO 24T9 CONNECTION DETAIL 16-XC

ALL ARC WELDS TO BE MADE WITH LOW HYDROGEN RODS IN THE E-70 SERIES OR EQUAL.
ALL PLATES TO BE GRADE A36 STEEL.

REF. DWGS.		
	7-AB4-11	7-22-68
	7-AB4-11.1	7-22-68
	7-AB1-7	7-22-68
	7-AB1-12	7-22-68
	7-AB2-4	7-22-68

CONNECTION DETAILS
FOR
WORLD TRADE CENTER - N.Y.C.
FOR
THE PORT OF NEW YORK AUTHORITY

CONNECTION BETWEEN C32T19 AND 24T9 16-XC

FABRICATION BY LACLEDE STEEL COMPANY

FABRICATED AT MADISON, ILLINOIS		DESIGN DRAWING NO. 7-AB4-11	PLATE
APPROVED FOR FABRICATION BY James White FOR P.O.N.Y.A.	DATE 1/31/69	DRAWN BY gdc DATE DEC. 27, 1968	
APPROVED FOR FABRICATION BY FOR FABRICATOR	DATE	CHECKED BY T.M. CHURA DATE DEC. 27, 1968	IN CHARGE OF PROD. DEV.
DETAILED BY A.C. WEBER		FABRICATION CONT. NO. WTC 221	SHEET NO. CD-227

NO	DATE	REVISION	BY

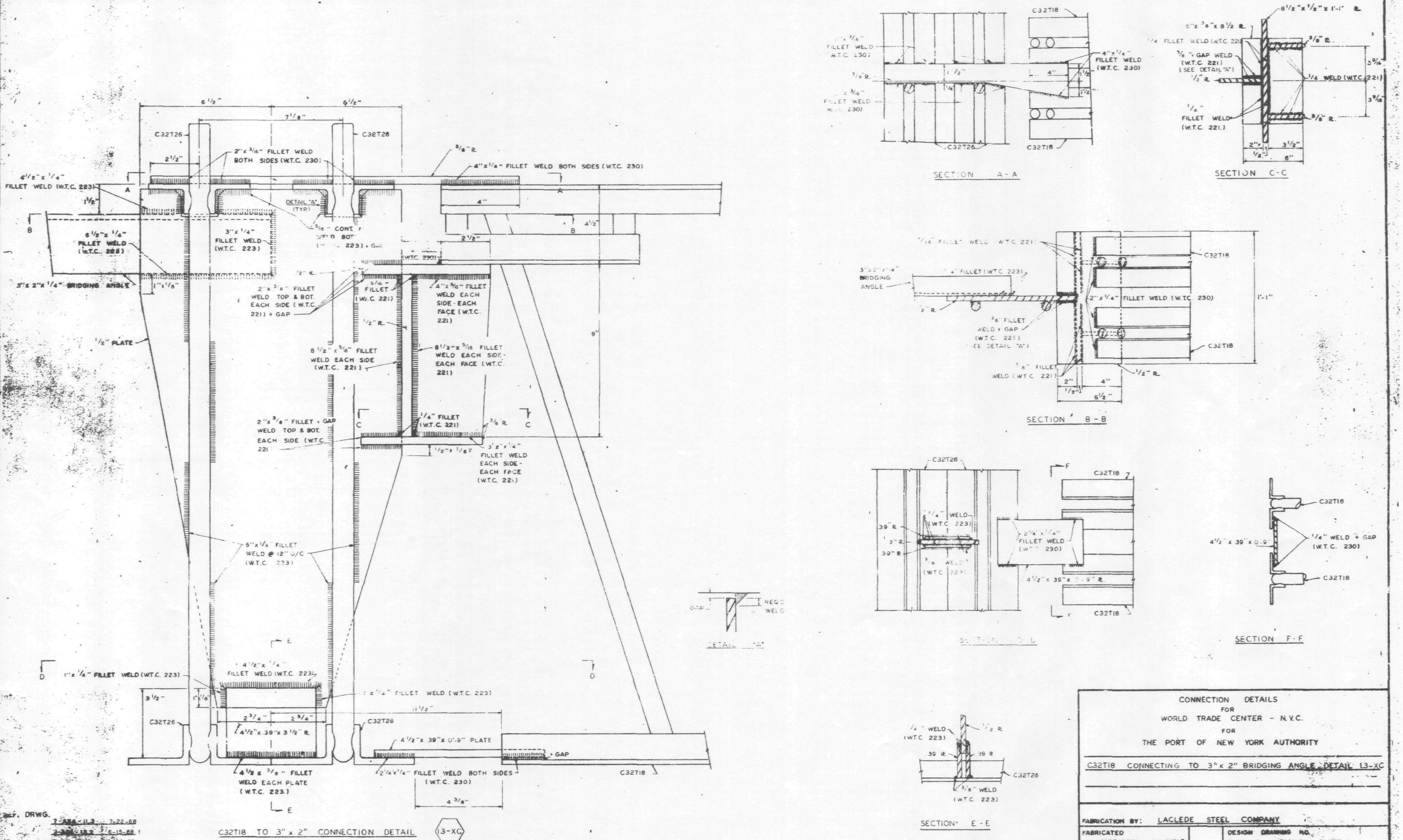

REF. DRWG.
7-AB4-13 7-22-68
7-AB4-13.2 6-15-68
7-AB1-... 7-22-68
7-AB1-13 7-22-68

NOTE
1. ALL ARC WELDS TO BE MADE WITH LOW HYDROGEN RODS IN THE E-70 SERIES OR EQUAL.
2. ALL PLATES TO BE ASTM A36.

NO	DATE	REVISION	BY

CONNECTION DETAILS
FOR
WORLD TRADE CENTER - N.Y.C.
FOR
THE PORT OF NEW YORK AUTHORITY

C32T18 CONNECTING TO 3" x 2" BRIDGING ANGLE DETAIL 13-XC

FABRICATION BY: LACLEDE STEEL COMPANY
FABRICATED AT MADISON, ILLINOIS
APPROVED FOR FABRICATION BY [signature] FOR P.O.N.Y.A. DATE 1/31/69
APPROVED FOR FABRICATION BY ____ FOR FABRICATOR DATE
LACLEDE STEEL CO.
DETAILED BY: A.C. WEBER
DESIGN DRAWING NO. 7-AB4-13 7-22-68 PLATE
DRAWN BY: E.B. DATE: DEC. 27, 1968
CHECKED BY: T.M. CHURA DATE: DEC. 27, 1968
IN CHARGE OF PROD. DEV.
FABRICATION CONT. NO W.T.C. 221
SHEET NO. CD-228

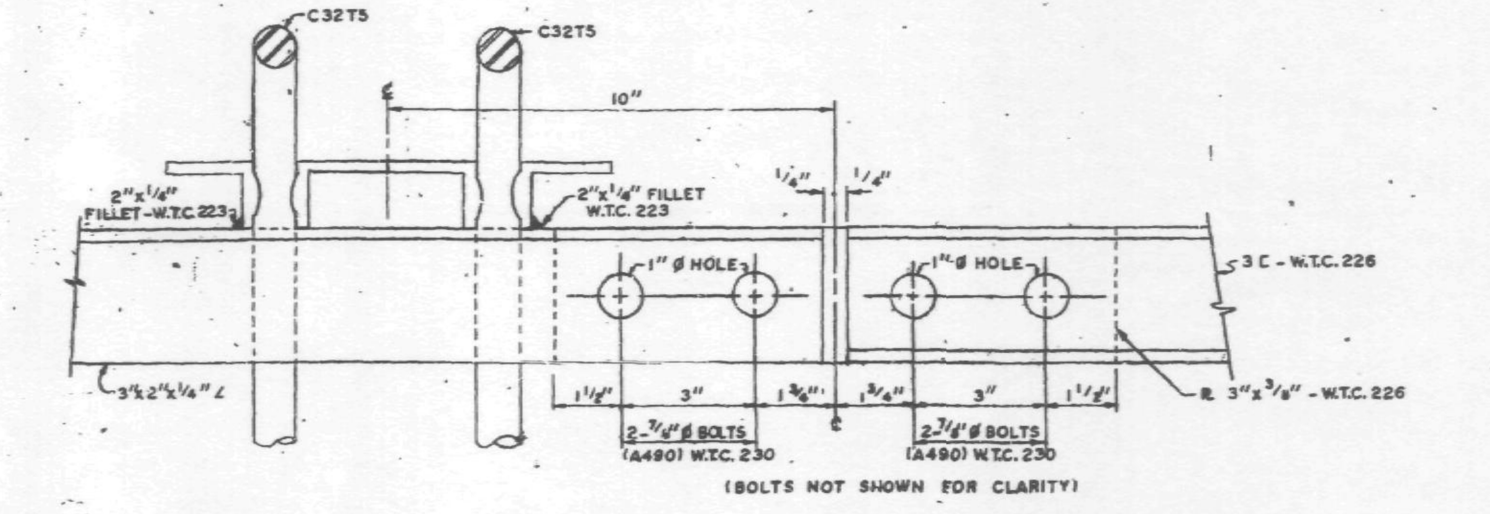

PANEL JOINT CONNECTION (1-A)
PANELS: M1, MR1, C6, CR6, C7 & CR7

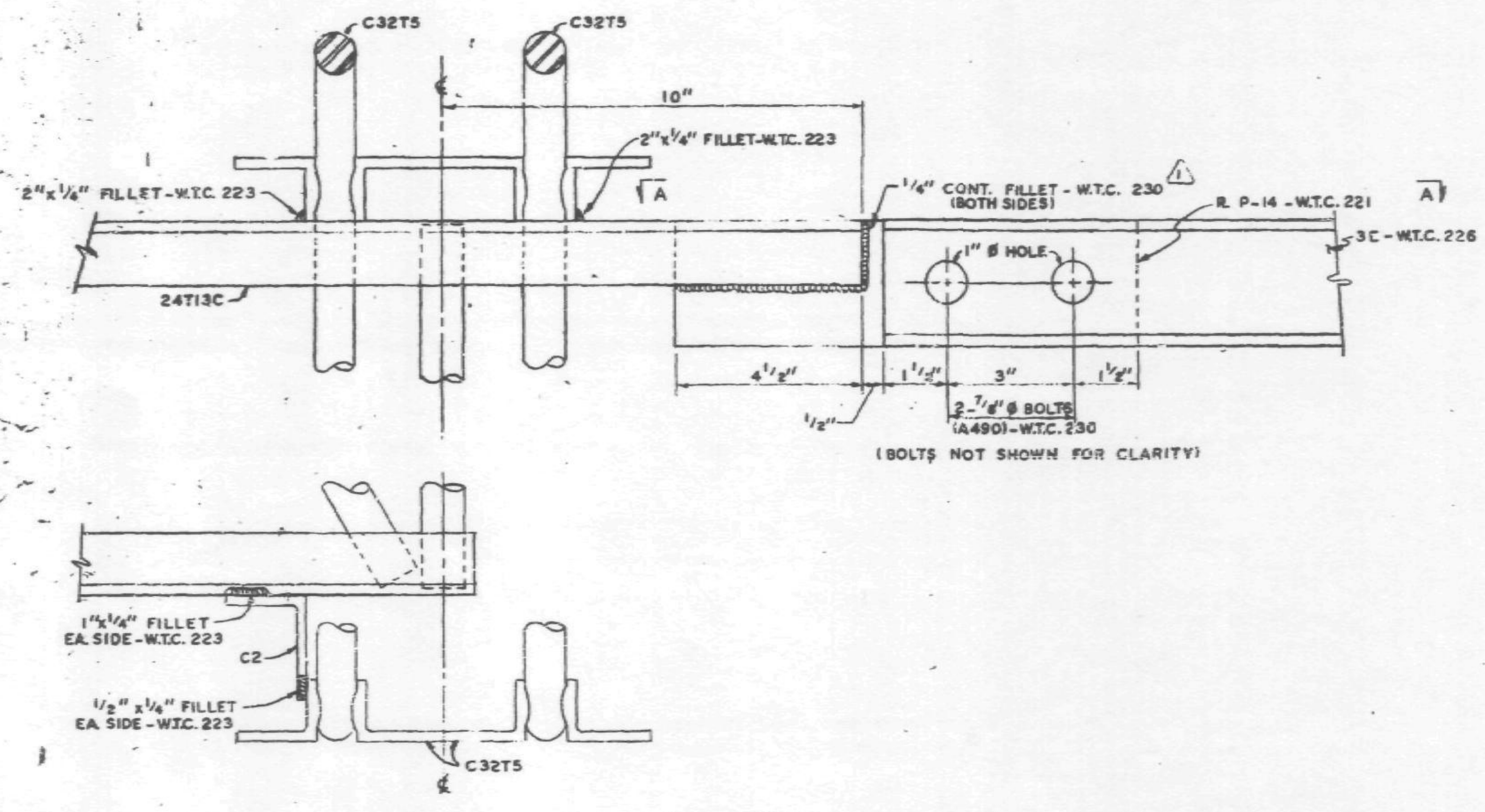

PANEL JOINT CONNECTION (2-A)
PANEL: M1, MR1, C6, CR6, C7 & CR7

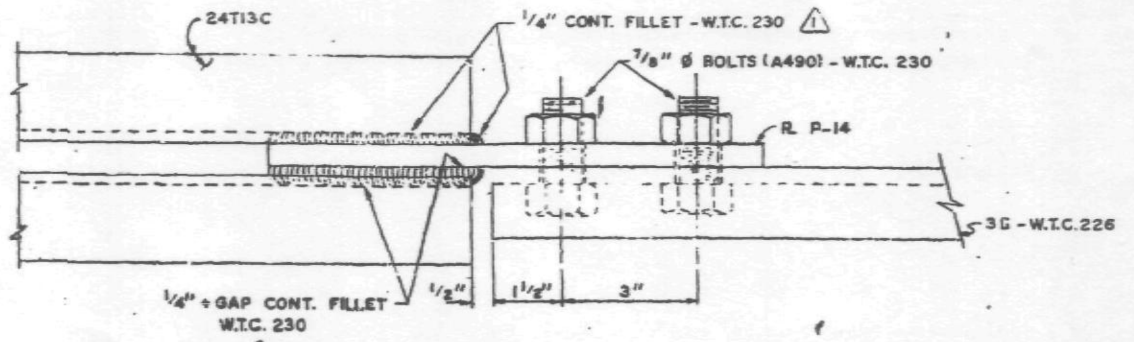

SECTION A-A

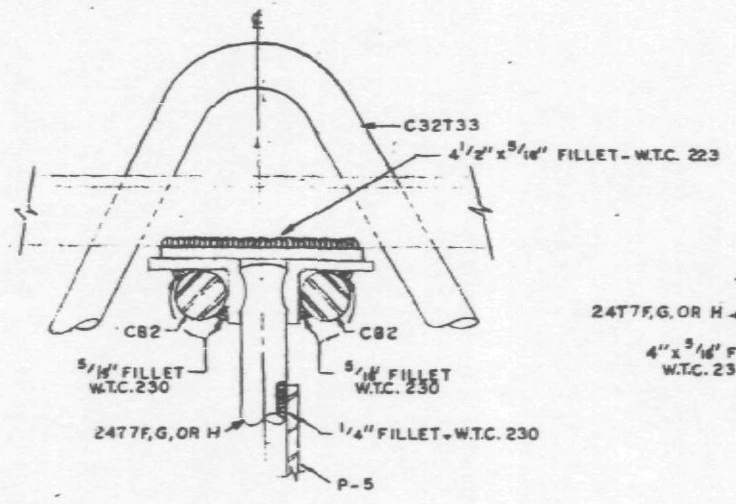

SECTION B-B

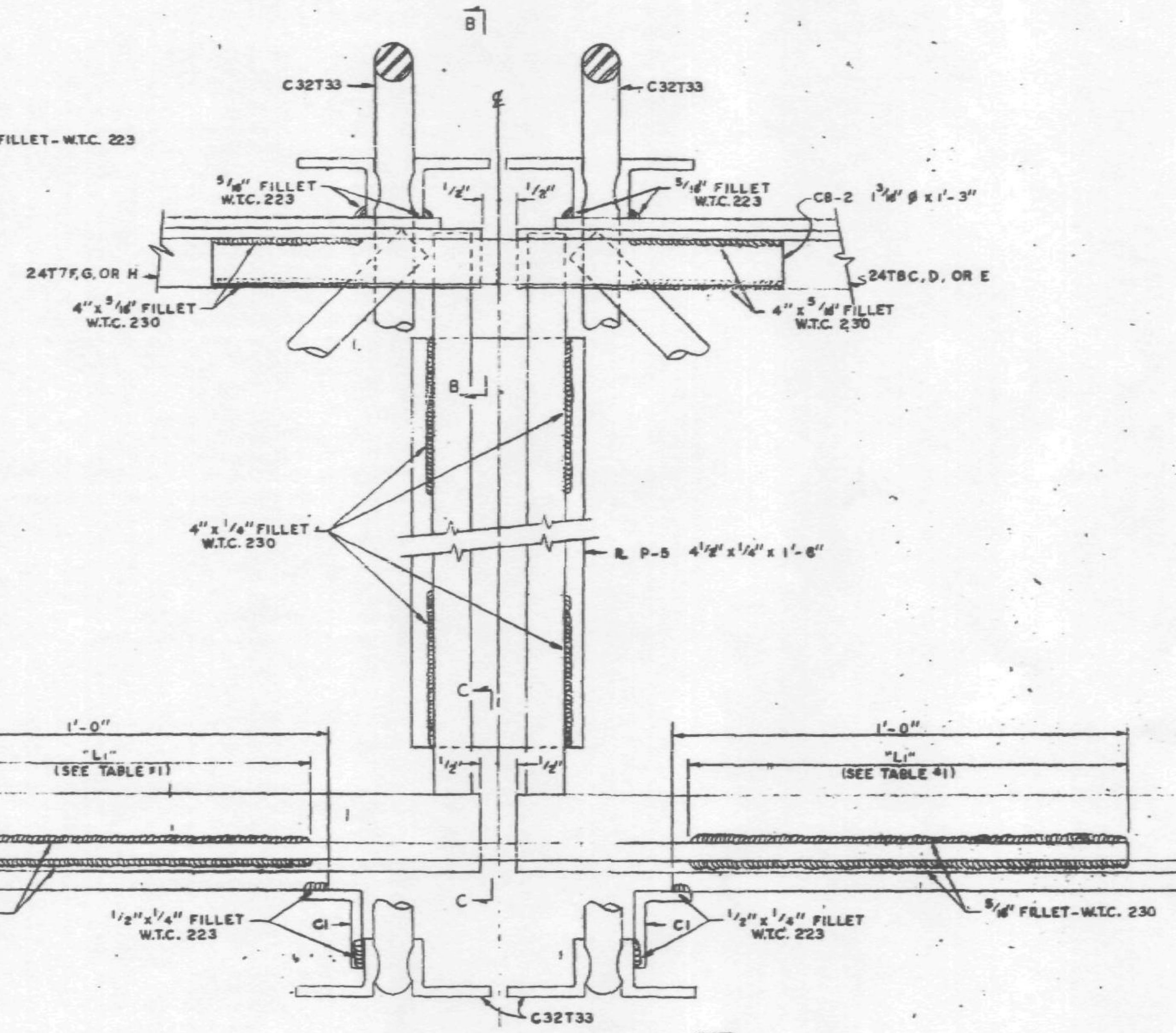

PANEL JOINT CONNECTION (20-C)
PANELS: E3, ER3, E8, ER8, F3, FR3, F8, & FR8.

TABLE #1

CONNECTED TRUSSES	"L1"
24T7F TO 24T8C	1'-0"
24T7G TO 24T8D	1'-3"
24T7H TO 24T8E	1'-1 1/2"

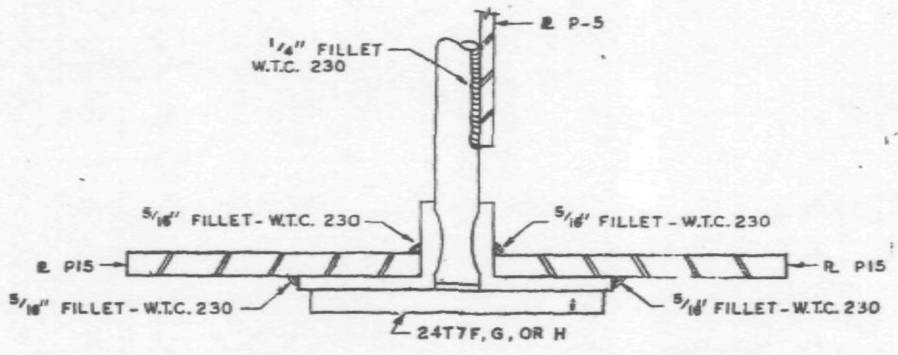

SECTION C-C

ALL ARC WELDS TO BE MADE WITH LOW HYDROGEN RODS IN THE E-70 SERIES OR EQUAL.

CONNECTION DETAILS
FOR
WORLD TRADE CENTER - N.Y.C.
FOR
THE PORT OF NEW YORK AUTHORITY

CONNECTION DETAILS 1-A, 2-A & 20-C.

FABRICATION BY: LACLEDE STEEL COMPANY			
FABRICATED AT MADISON, ILLINOIS		DESIGN DRAWING NO.	PLATE
APPROVED FOR FABRICATION BY: James White FOR P.O.N.Y.A.	DATE 4/25/69	DRAWN BY: gdc DATE MARCH 20, 1969	
APPROVED FOR FABRICATION BY: FOR FABRICATOR	DATE	CHECKED BY: T.N. CHURA DATE MARCH 20, 1969	IN CHARGE OF PROD. DEV.
DETAILED BY: LACLEDE STEEL CO.		FABRICATION CONT. NO. W.T.C. 221	SHEET NO. CD 220

NO.	DATE	REVISION	BY
1	4-18-69	AS NOTED	G.D.C.

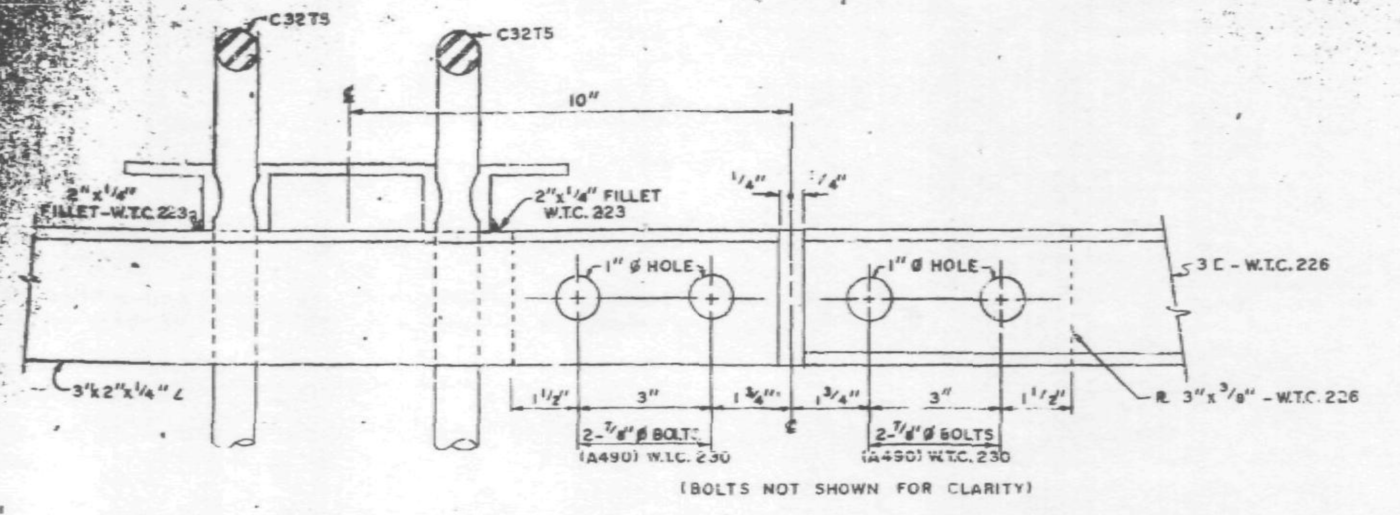

PANEL JOINT CONNECTION (1-A)
PANELS: M1 & MR1

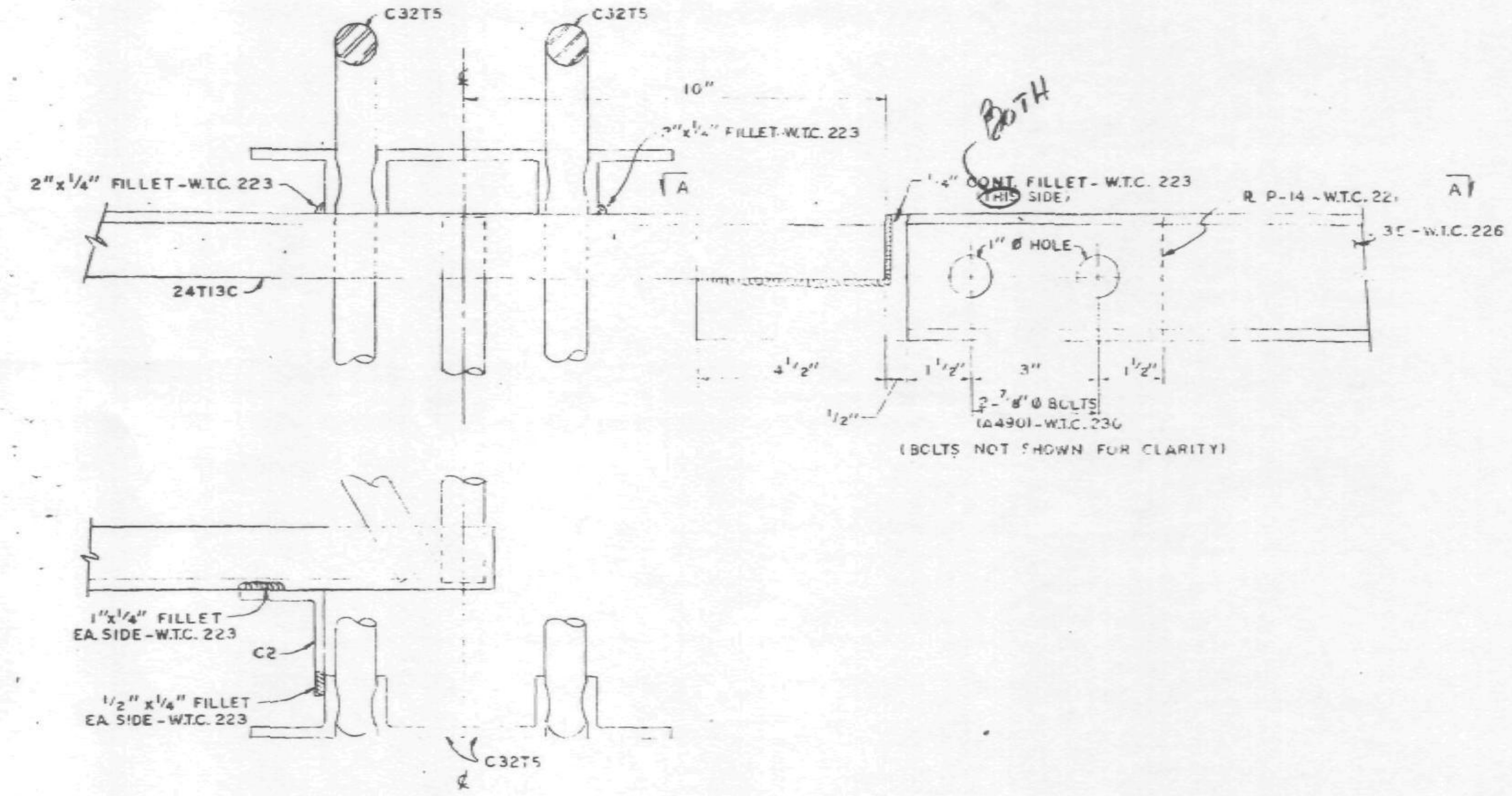

PANEL JOINT CONNECTION (2-A)
PANEL: M1 & MR1

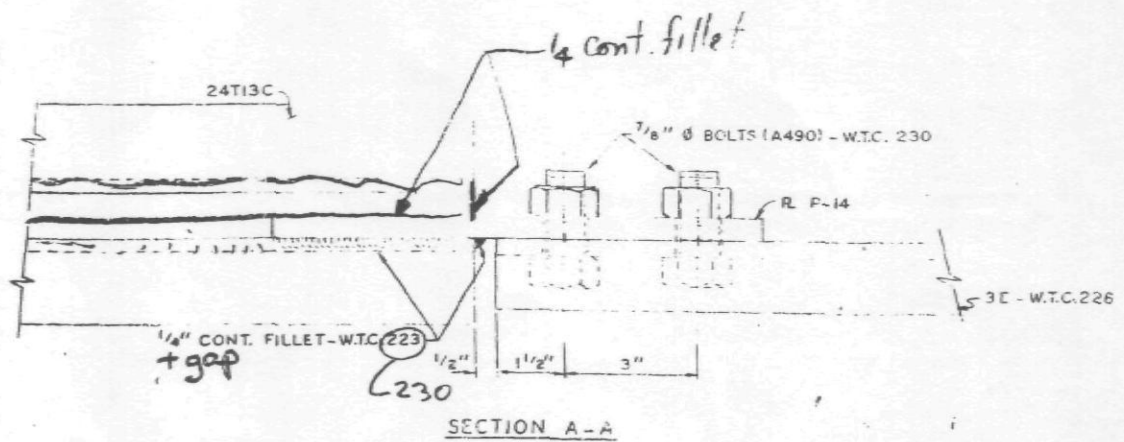

SECTION A-A

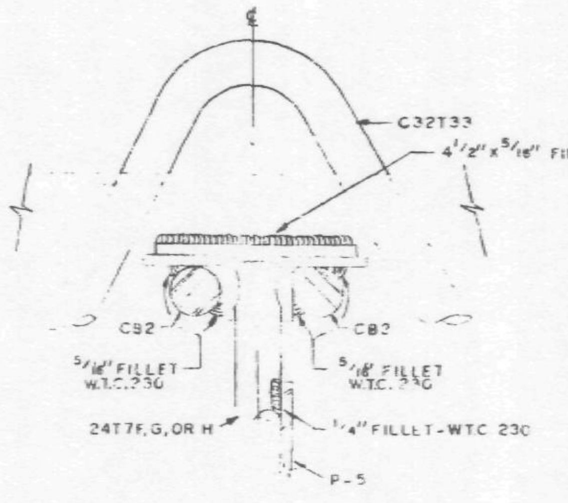

SECTION B-B

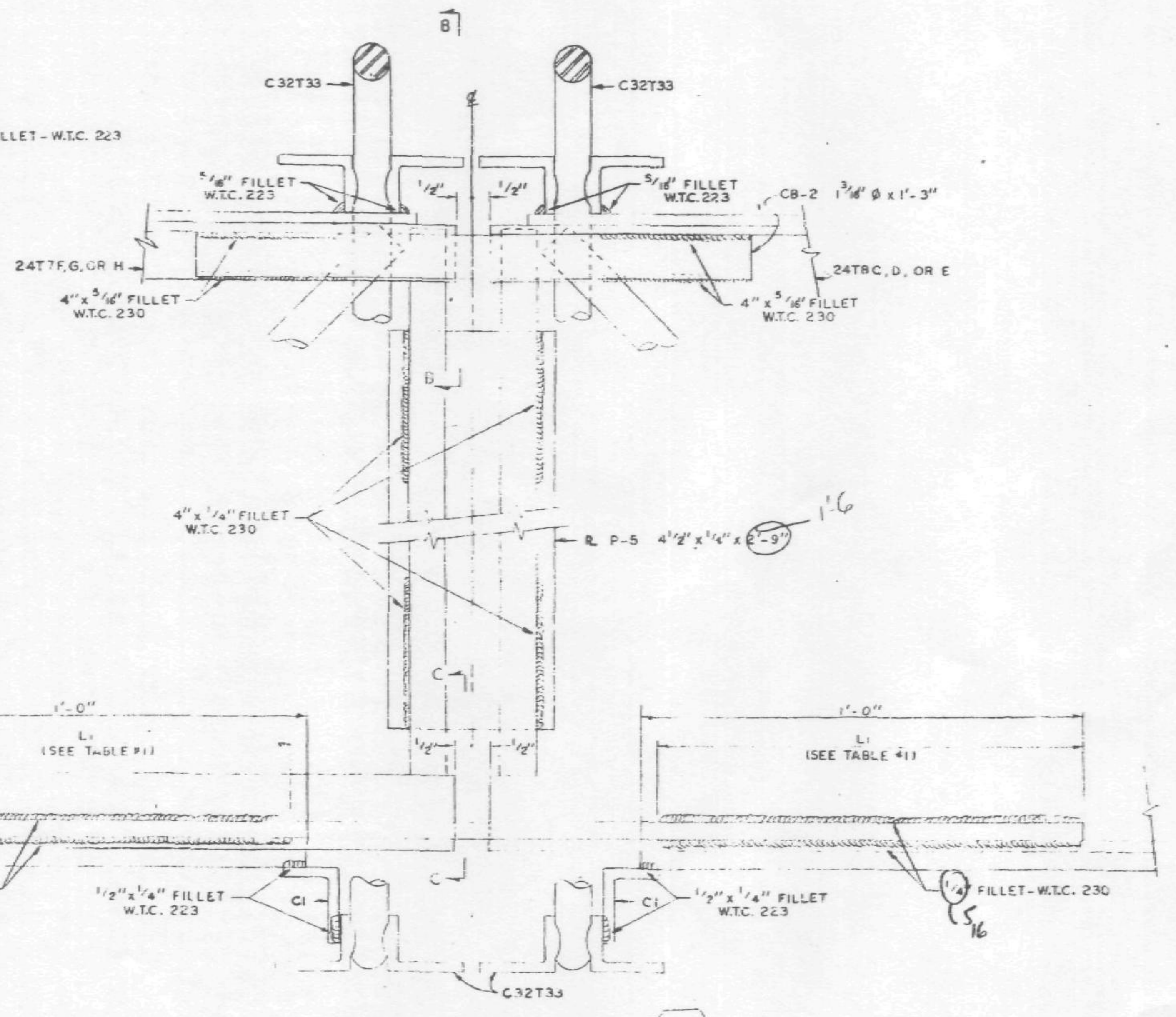

PANEL JOINT CONNECTION (20-C)
PANELS: E3, ER3, E8, ER8, F3, FR3, F8, & FR8.

TABLE #1

CONNECTED TRUSSES	L1
24T7F TO 24T8C	10" — 1'-0
24T7G TO 24T8D	[illegible] — 1'-3
24T7H TO 24T8E	11 1/2" — 1'-1 1/2

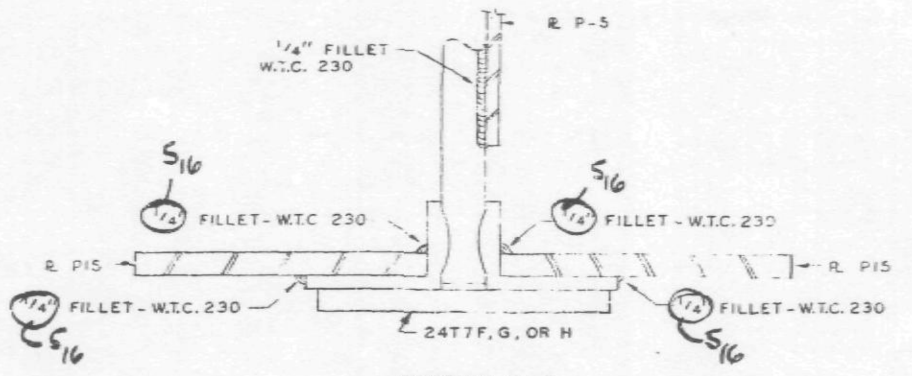

SECTION C-C

4/10/69 SK

ALL ARC WELDS TO BE MADE WITH LOW HYDROGEN RODS IN THE E-70 SERIES OR EQUAL.

CONNECTION DETAILS
FOR
WORLD TRADE CENTER - N.Y.C.
FOR
THE PORT OF NEW YORK AUTHORITY

CONNECTION DETAILS 1-A, 2-A & 20-C.

FABRICATION BY: LACLEDE STEEL COMPANY
FABRICATED AT MADISON, ILLINOIS
DESIGN DRAWING NO.
PLATE
APPROVED FOR FABRICATION BY: ______ FOR P.O.N.Y.A. DATE
DRAWN BY: gdc DATE MARCH 20, 1969
APPROVED FOR FABRICATION BY: ______ FOR FABRICATOR DATE
CHECKED BY: T.M. CHURA DATE MARCH 20, 1969
IN CHARGE OF PROD. DEV.
DETAILED BY: A. CARL WEBER
LACLEDE STEEL CO.
FABRICATION CONT. NO. W.T.C. 221
SHEET NO. CD 229

NO.	DATE	REVISION	BY

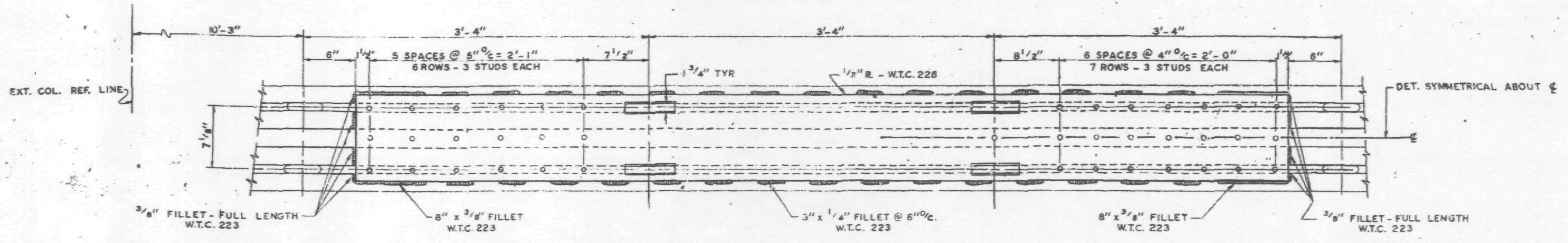

INTERIOR PANEL CONNECTION (3-A)
PANELS: A8

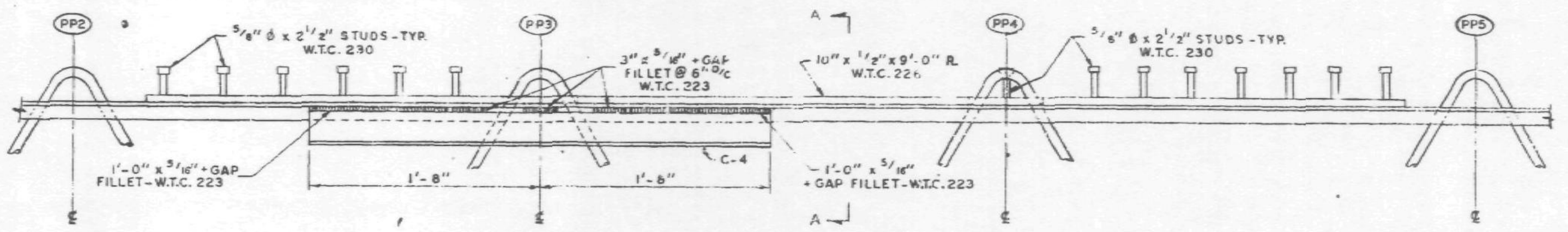

ELEVATION OF CONNECTIONS (3-A) & (4-A)

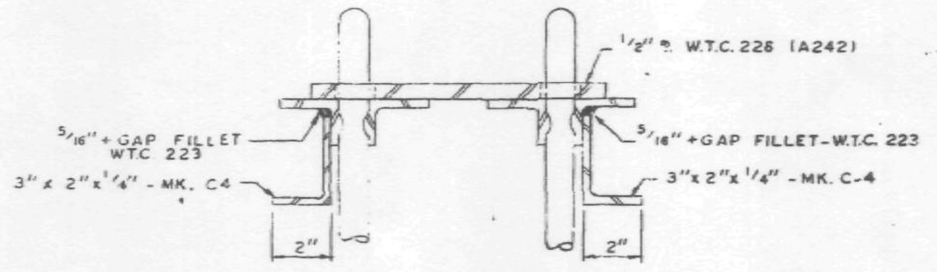

SECTION A-A

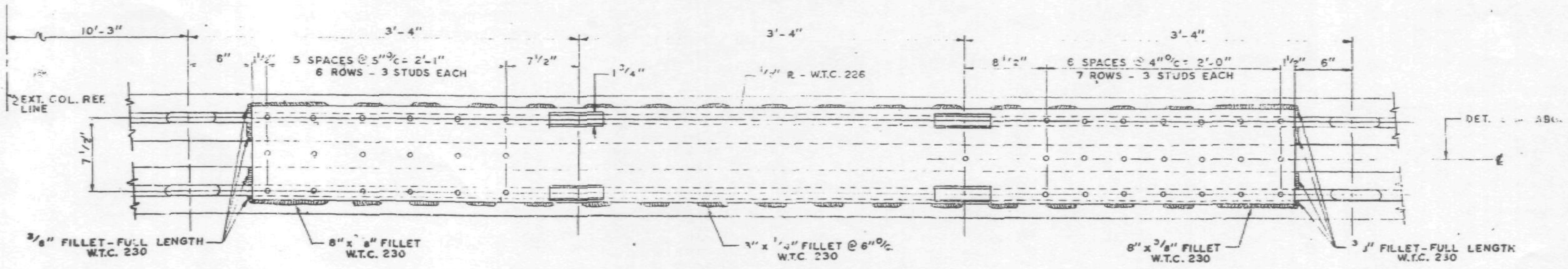

PANEL JOINT CONNECTION (4-A)
PANELS: B8 & BR8

ALL ARC WELDS TO BE MADE WITH LOW HYDROGEN RODS IN THE E-70 SERIES OR EQUAL.

CONNECTION DETAILS
FOR
WORLD TRADE CENTER - N.Y.C.
FOR
THE PORT OF NEW YORK AUTHORITY

CONNECTION DETAILS 3-A & 4-A

FABRICATION BY: LACLEDE STEEL COMPANY			
FABRICATED AT MADISON, ILLINOIS		DESIGN DRAWING NO. 7-AB4-62	PLATE
APPROVED FOR FABRICATION BY: James White FOR P.O.N.Y.A.	DATE 4/10/69	DRAWN BY: gdc DATE MARCH 28, 1969	
APPROVED FOR FABRICATION BY: FOR FABRICATOR	DATE	CHECKED BY: T.M. CHURA DATE MARCH 28, 1969	IN CHARGE OF PROD. DEV.
DETAILED BY: A CARL WEBER		FABRICATION CONT. NO. W.T.C. 221	SHEET NO. CD 230

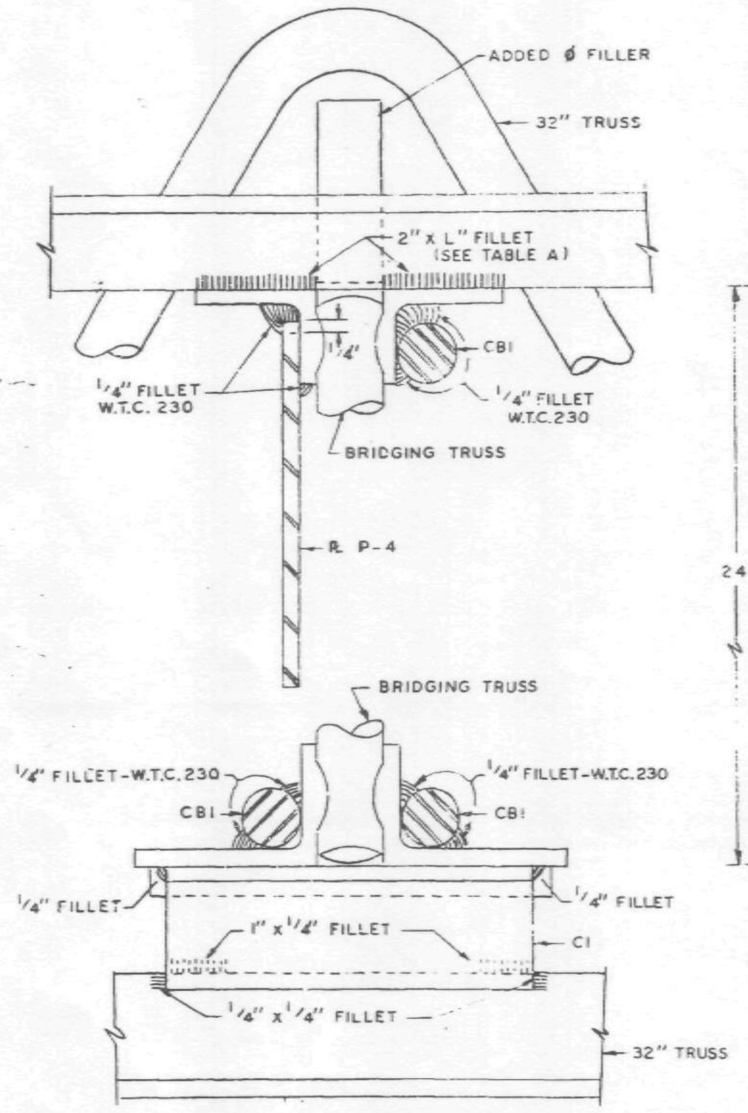

SECTION A-A

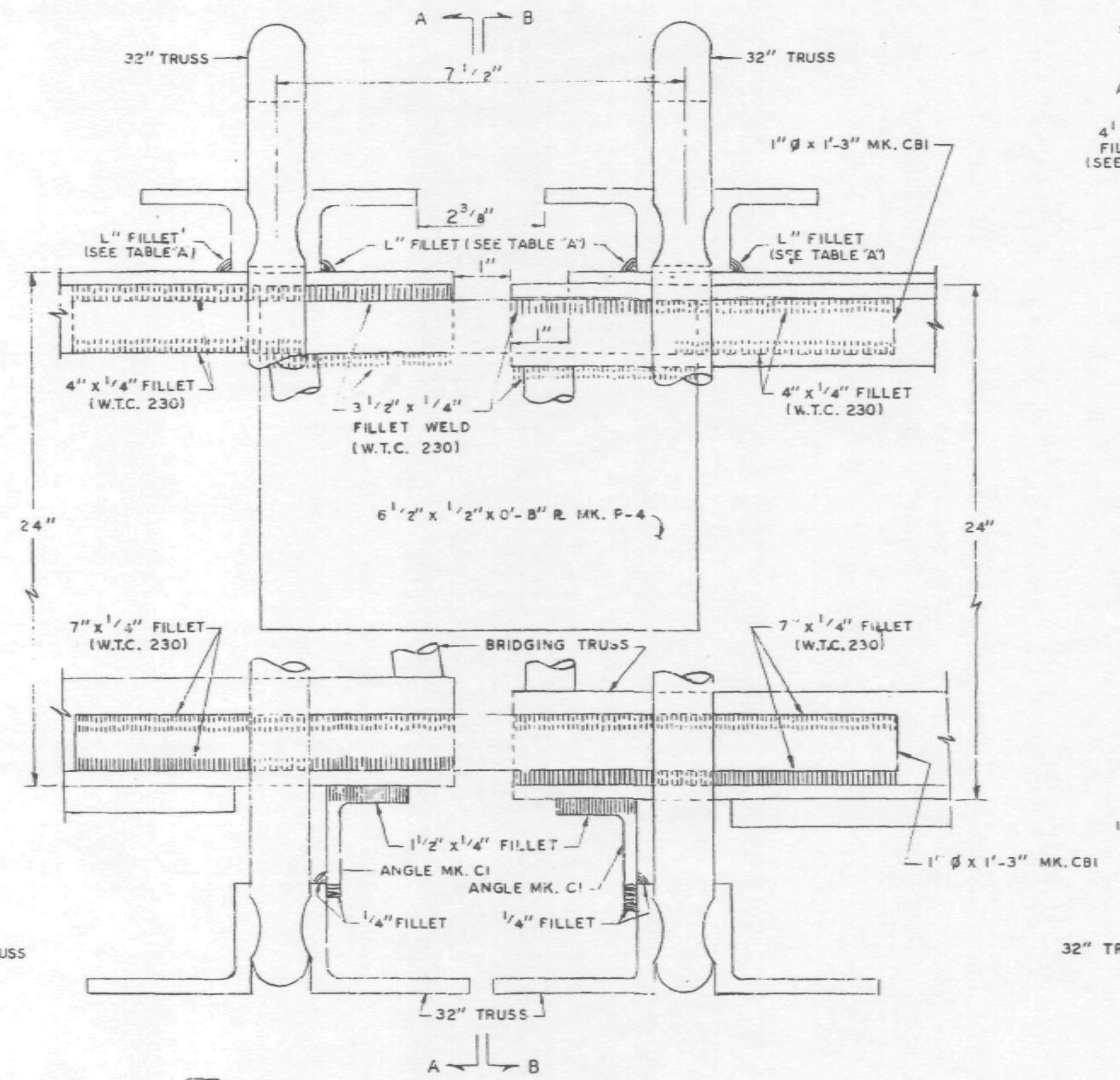

8-A PANEL JOINT CONNECTION DETAIL

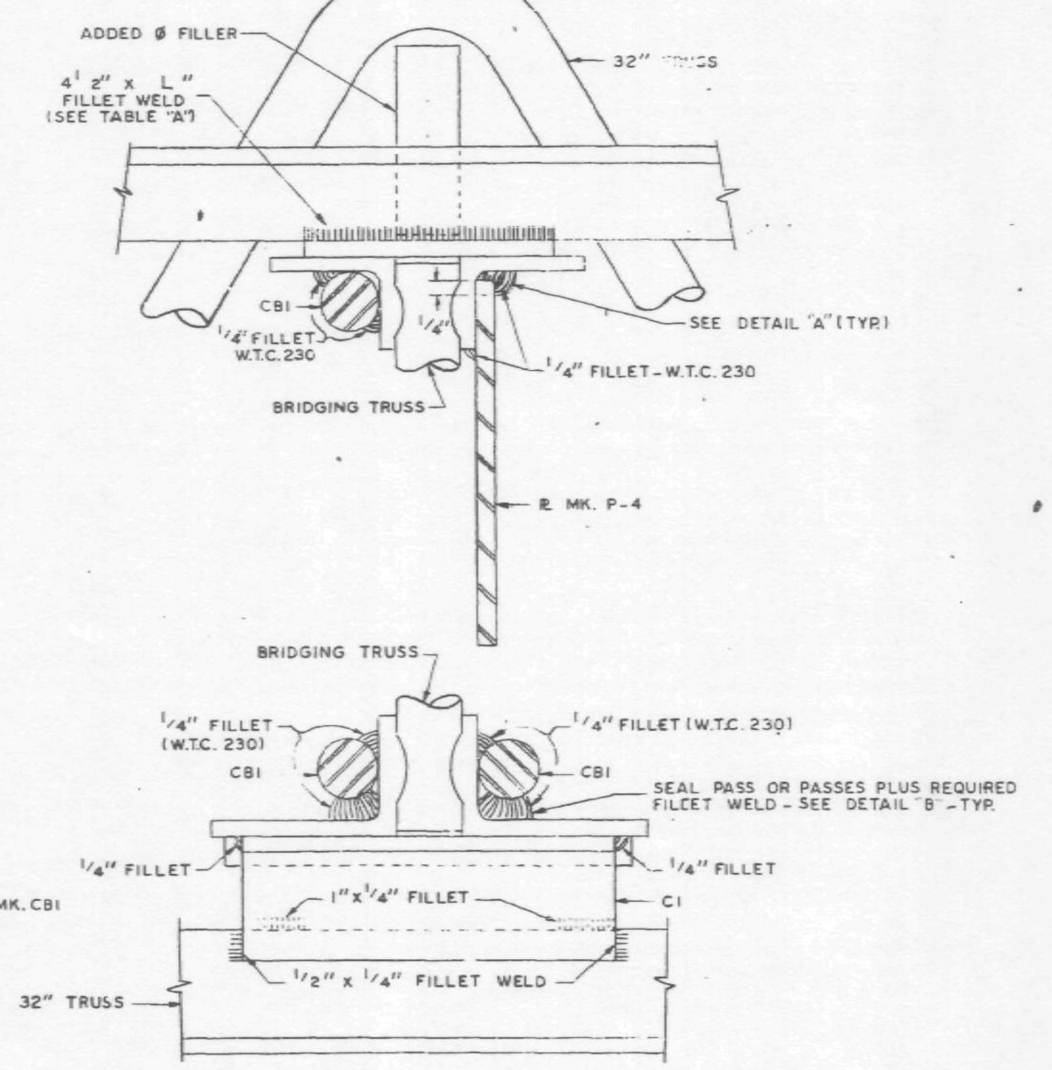

SECTION B-B

ALL ARC WELD TO BE MADE WITH LOW HYDROGEN RODS IN THE E-70 SERIES OR EQUAL.
UNLESS OTHERWISE NOTED ALL ARC WELDS BY W.T.C. 223.
ALL CONNECTION PLATES AND ø SPLICE BARS TO BE ASTM. A36.

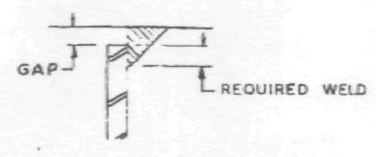

DETAIL A

TABLE "A"

"L"	LOCATION
5/16"	ALL FLOOR 44 & 78 EXCEPT CONDITION BELOW.
3/16"	FLR. 44, PANELS DR8 TO ER8 - SOUTH, BLDG. "A"

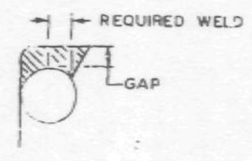

DETAIL "B"

CONNECTION DETAILS
FOR
WORLD TRADE CENTER - N.Y.C.
FOR
THE PORT OF NEW YORK AUTHORITY

CONNECTION DETAIL 8-A
WORLD TRADE CENTER TOWERS A & B

FABRICATION BY: LACLEDE STEEL COMPANY			
FABRICATED AT MADISON, ILLINOIS		DESIGN DRAWING NO. 7-A84-18	PLATE
APPROVED FOR FABRICATION BY: FOR P.O.N.Y.A.	DATE 6/4/69	DRAWN BY: G.D.C. DATE APRIL 22, 1969	
APPROVED FOR FABRICATION BY: FOR FABRICATOR	DATE	CHECKED BY: T.M.CHURA DATE APRIL 22, 1969	IN CHARGE OF PROD. DEV.
DETAILED BY: A. CARL WEBER		FABRICATION CONT. NO. W.T.C. 221	SHEET NO. CD 231

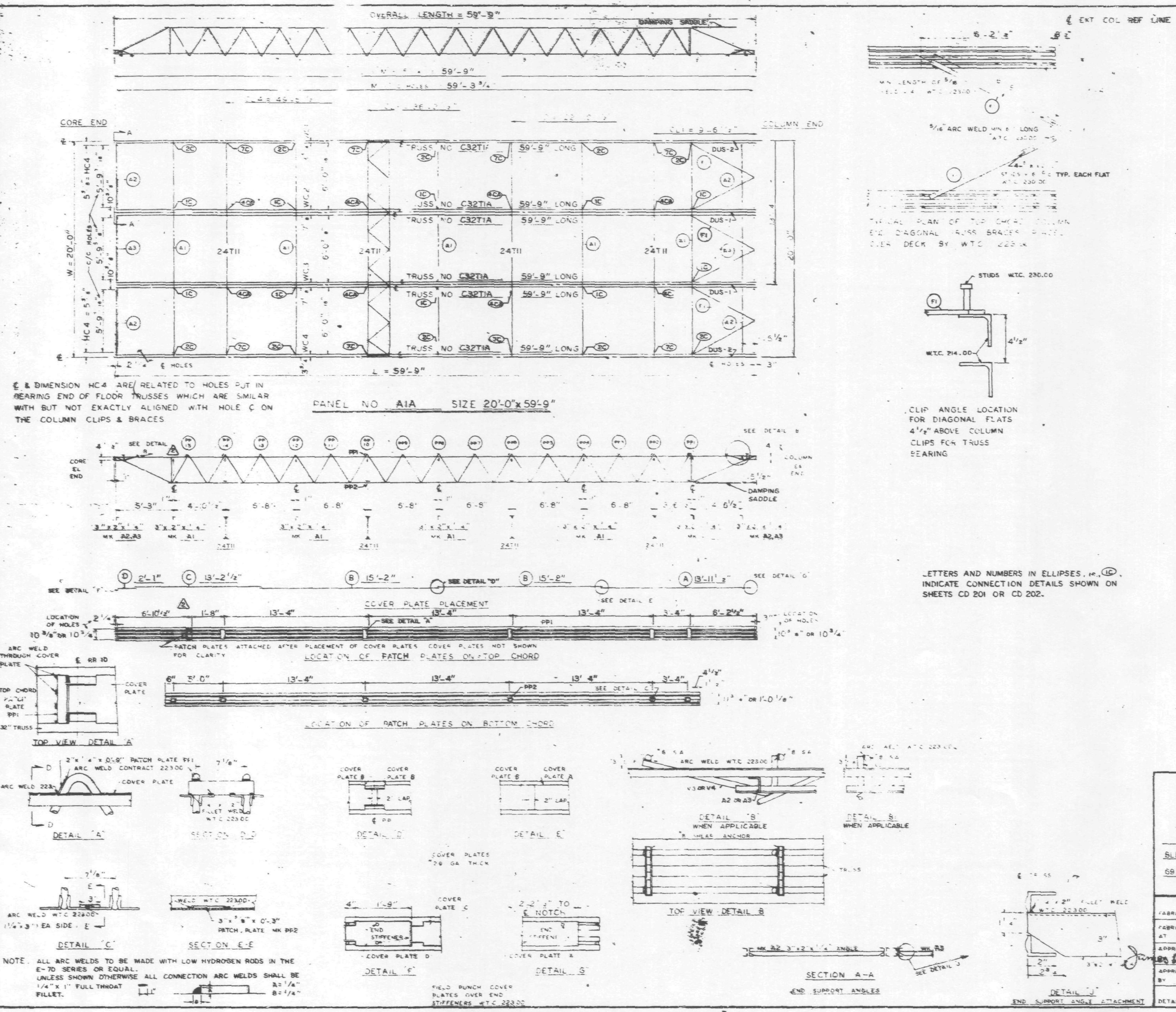

REQUIRED MATERIAL PER PANEL				REF. DRWG.
MATERIAL	MK	PCS	SIZE	
FLOOR TRUSSES	T1A	6	C32T1A – 59'-9"	ST201A
BRIDGING TRUSSES	T11	4	24T11 [illegible]	ST211
3"x2"x1/4" ANGLE	A1	5	3"x2"x1/4"x[illegible]	ST403
	A2	4	3"x2"x1/4"x5'-11 9/16"	ST403
	A3	2	3"x2"x1/4"x5 [illegible] 1/4"	ST403
DIAGONAL FLATS	F1	6	1 1/2"x[illegible] 8"	ST402
PATCH PLATES	PP1	24	[illegible] x 1/4" x 0'-9"	ST400
	PP2	24	3" x 3/8" x 0'-[illegible]"	ST400
COVER PLATES	A	4	9"x.0135"x13'-[illegible] 1/2"	ST303
	B	8	9"x.0135"x15'-2"	ST303
	C	4	9"x.0135"x13'-2 1/2"	ST303
	D	4	9"x.0135"x2'-1"	ST303
ANGLE CLIPS	C1	24	2"x1 1/2"x1/4"x0'-6"	ST400
#8 SHEAR ANCHOR	SA2	16	#8 REBAR x 0'-9"	ST400
DAMPING SADDLE	DUS-1	2	3 1/2"x3 1/2"x3/8"x3'-6 7/8"	ST298
	DUS-2	2	3 1/2"x3 1/2"x3/8"x3'-6 7/8"	ST298
CONNECTION BAR	CB1	2	[illegible] x 1'-3"	ST400
CONNECTION PLATES	P1	10	3 1/2" x 3/8" x 8 1/2"	ST400
	P2	8	4 1/2" x .30" x 0'-9"	ST400
	P3	8	4 1/2" x .30" x 1'-0"	ST400

NO.	DATE	REVISION
2	2-17-68	AS NOTED
1	7-12-68	GENERAL

REF DRWG

7-AB4-3,3,1 & 38	1-3-68
7-AB4-15 & 16	3-5-68
7-AB4-41	1-3-68
SA-124	10-20-67
7-AB3-2	1-3-68
7-AB1-2	2-15-68
7-AB2-6	2-15-68

FLOOR PANEL DETAILS
FOR
WORLD TRADE CENTER - N.Y.C.
FOR
THE PORT OF NEW YORK AUTHORITY

BLDG A FLOORS 12-24, 26-38 (NORTH & SOUTH); 49-58, 60-66, 68, 69 (NORTH)
PANEL A1A - 20'-0" x 59'-9"

FABRICATION BY LACLEDE STEEL COMPANY
FABRICATED AT MADISON, ILLINOIS
DESIGN DRAWING NO 7-AB3-3 4-1-68 PLATE
APPROVED FOR FABRICATION James White FOR PONYA DATE [illegible]
DRAWN BY [illegible] DATE FEB 24, 1968
APPROVED FOR FABRICATION BY FOR FABRICATOR DATE
CHECKED BY [illegible] DATE FEB 24, 1968
DETAILED BY A.E. WEBER
FABRICATION CONT. NO. W.T.C. 221
SHEET NO FP A1A

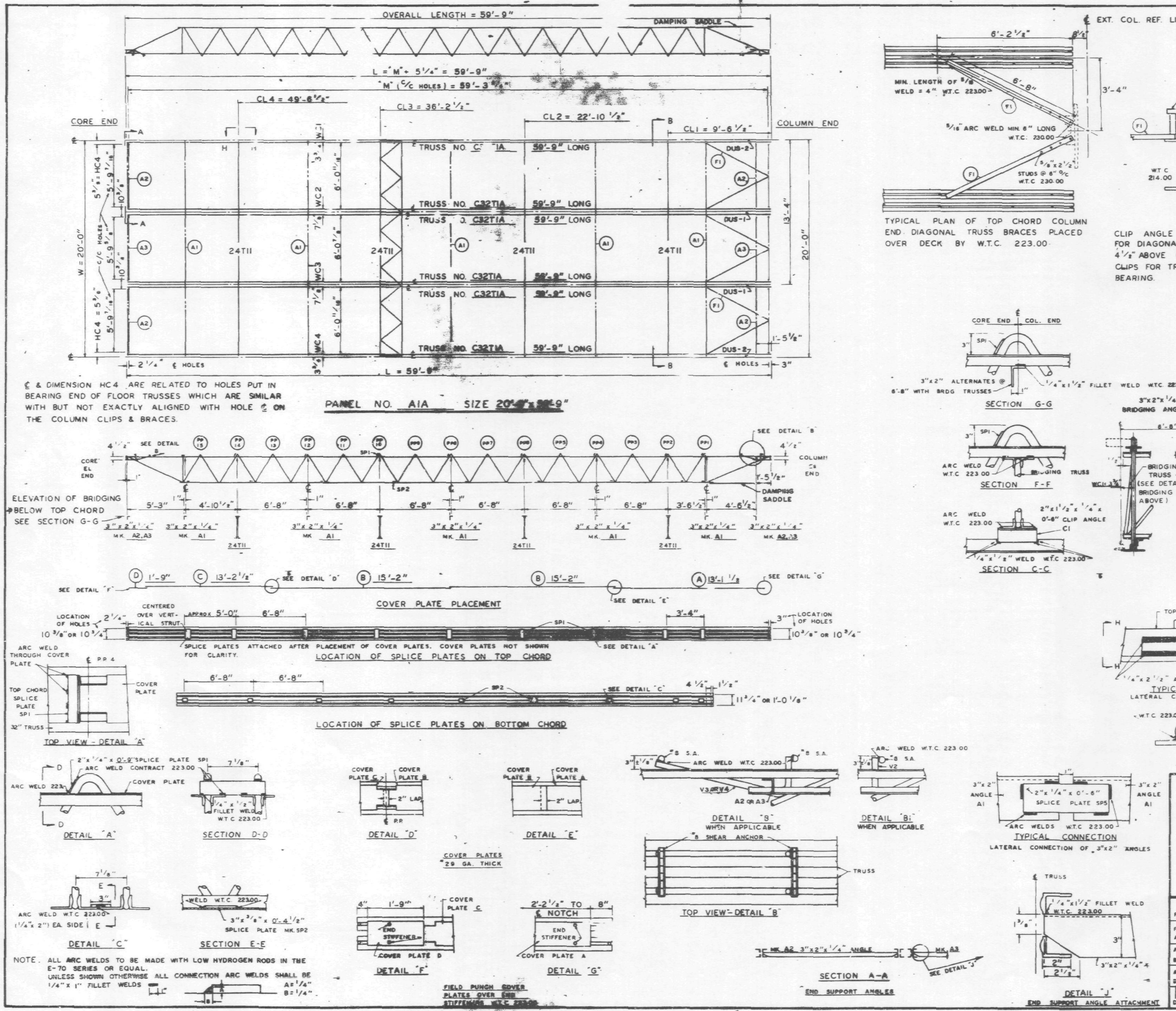

REQUIRED MATERIAL PER PANEL				REF. DRWG.
MATERIAL	MK.	PCS.	SIZE	
FLOOR TRUSSES	T1A	[illegible]	C32T1A x 59'-9"	ST201A
BRIDGING TRUSSES	T11	4	24T11 [illegible]	ST211
3"x2"x1/4" ANGLE	A1		3"x2"x1/4"x 18'-11"	400
	A2	4	3"x2"x1/4"x [illegible]	ST400
	A3	2	3"x2"x1/4"x [illegible]-11 1/2"	ST400
DIAGONAL FLATS	F1	6	1 1/2"x 5/8"x 6'-8"	ST400
SPLICE PLATES	SP1	36	[illegible]x 1/4"x 0'-9"	CD201
	SP2	[illegible]	[illegible]"x 3/8"x 0'-4 1/2"	CD201
	SP5	10	2"x 1/4"x 0'-6"	CD201
COVER PLATES	A	4	9"x.0135"x 13'-11 1/2"	ST303
	B	8	9"x.0135"x 15'-2"	ST303
	C	4	9"x.0135"x 13'-2 1/2"	ST303
	D	4	9"x.0135"x 1'-9"	ST303
ANGLE CLIPS	C1	24	2"x 1 1/2"x 1/4"x 0'-6"	CD201
#8 SHEAR ANCHOR	SA	16	#8 REBAR x 0'-9"	CD201
DAMPING SADDLE	DUS-1	2	3 1/2"x 3 1/2"x 3/8"x 3'-7 3/8"	ST298
	DUS-2	2	3 1/2"x 3 1/2"x 3/8"x 3'-7 3/8"	ST298
CONNECTION BAR	CB	32	3/4" ϕ x 0'-6"	CD201

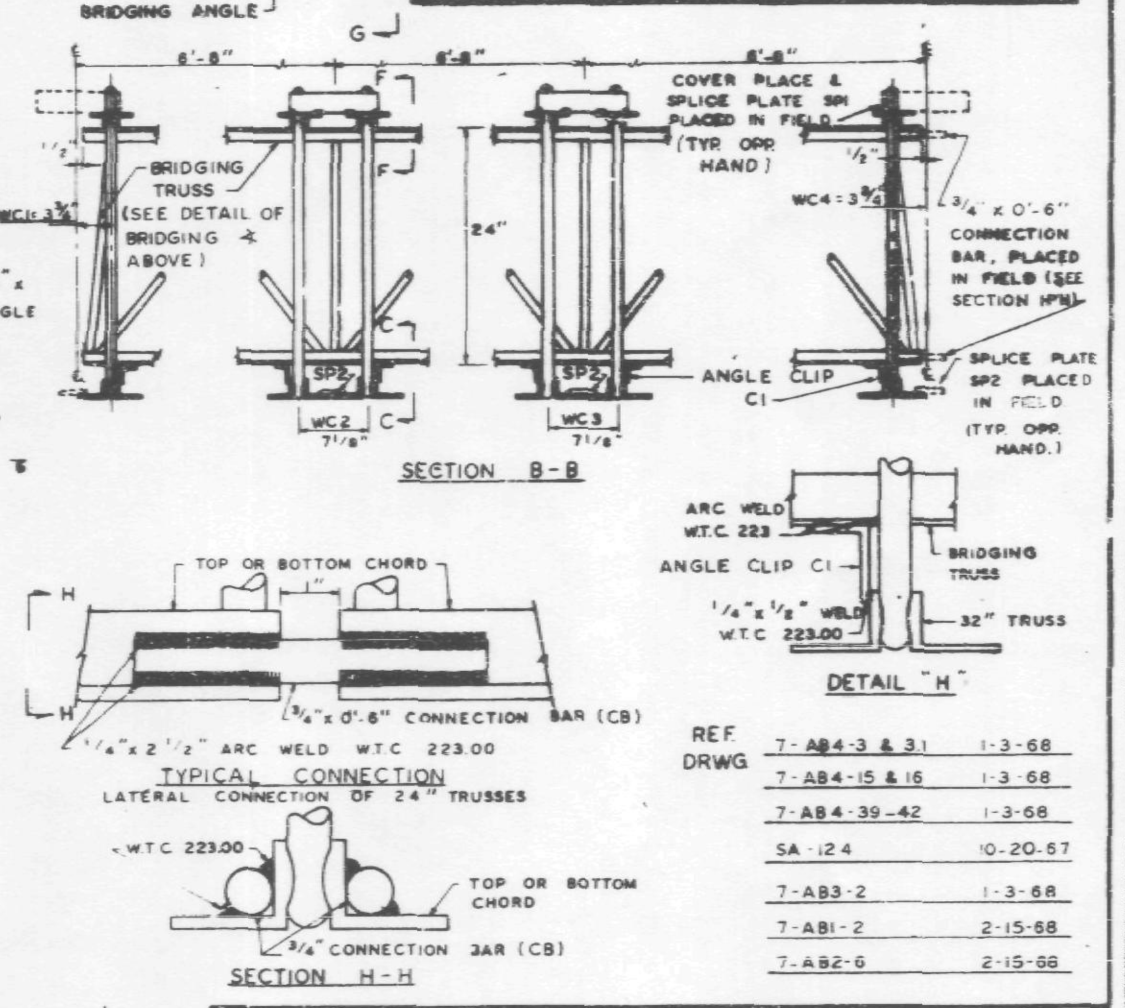

REF. DRWG	
7-AB4-3 & 3.1	1-3-68
7-AB4-15 & 16	1-3-68
7-AB4-39-42	1-3-68
SA-124	10-20-67
7-AB3-2	1-3-68
7-AB1-2	2-15-68
7-AB2-6	2-15-68

FLOOR PANEL DETAILS
FOR
WORLD TRADE CENTER - N.Y.C.
FOR
THE PORT OF NEW YORK AUTHORITY

BLDG. A FLOORS 12-24, 26-38 (NORTH & SOUTH); 49-58, [illegible]-66, 68, 69 (NORTH)

PANEL A1A - 20'-0" x 59'-9"

FABRICATION BY LACLEDE STEEL COMPANY

FABRICATED AT MADISON, ILLINOIS

DESIGN DRAWING NO. 7-AB3-3 2-15-68 PLATE

APPROVED FOR FABRICATION BY ______ FOR P.O.N.Y.A. DATE

APPROVED FOR FABRICATION BY ______ FOR FABRICATOR DATE

DRAWN BY [illegible] DATE FEB 24, 1968

CHECKED BY J.R. PAUL DATE FEB 24, 1968

IN CHARGE OF [illegible]

LACLEDE STEEL CO. DETAILED BY A.C. WEBER

FABRICATION CONT. NO. W.T.C. 221

SHEET NO. FP A1A

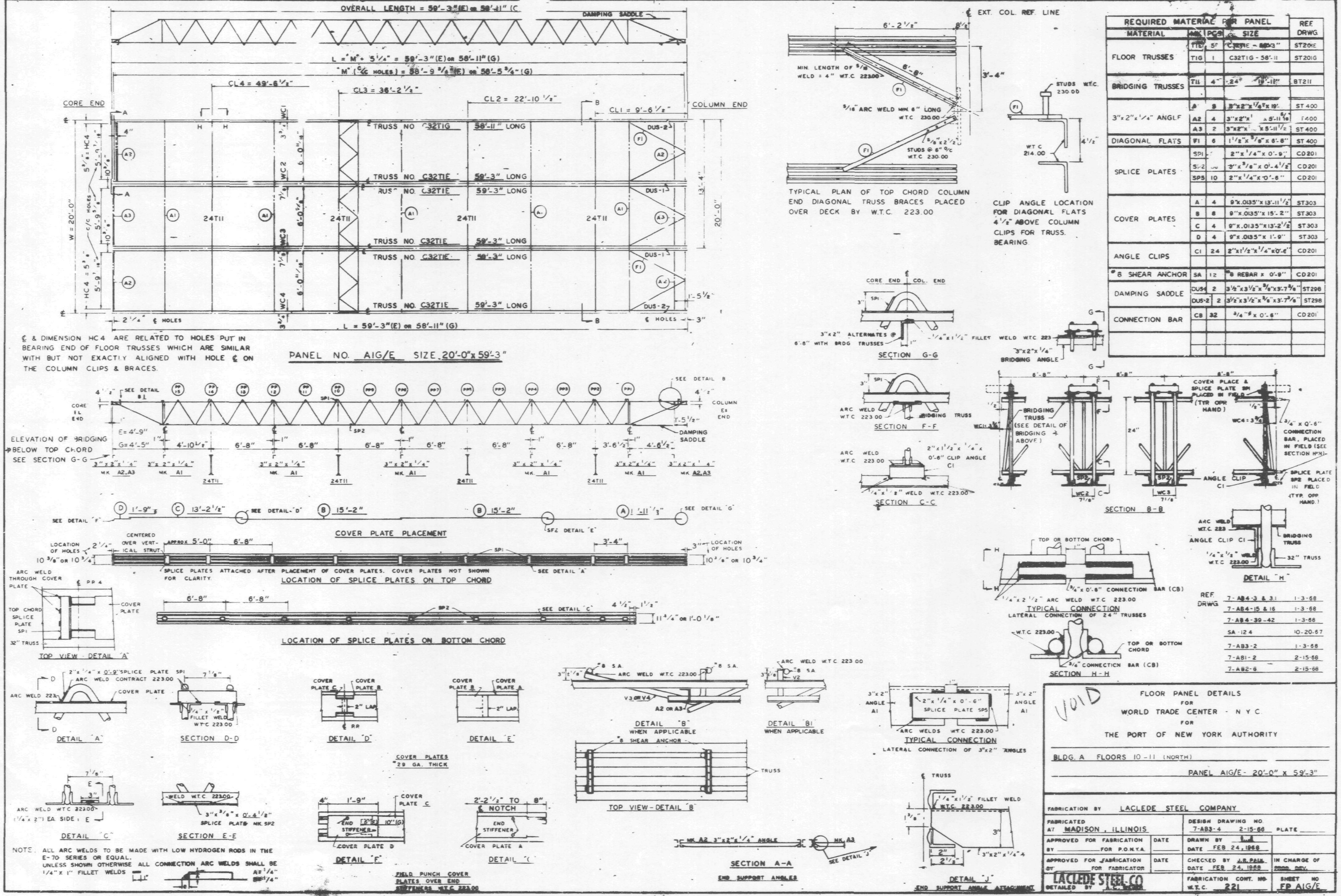

REQUIRED MATERIAL PER PANEL				REF. DRWG
MATERIAL	MK	PCS	SIZE	
FLOOR TRUSSES	TIE	5	C32TIE - 59'-3"	ST201E
	TIG	1	C32TIG - 58'-11	ST201G
BRIDGING TRUSSES	T11	4	24 19'-11"	BT211
3"x2"x1/4" ANGLE	A1	8	3"x2"x1/4"x 19'-	ST 400
	A2	4	3"x2"x1 x 5'-11 5/16	ST400
	A3	2	3"x2"x x 5'-11 1/2	ST 400
DIAGONAL FLATS	F1	6	1 1/2"x 3/8" x 6'-8"	ST 400
SPLICE PLATES	SP1		2"x 1/4" x 0'-9"	CD201
	SP2		3"x 3/8" x 0'-4 1/2"	CD201
	SP5	10	2"x 1/4" x 0'-6"	CD201
COVER PLATES	A	4	9"x.0135"x 13'-11 1/2"	ST303
	B	8	9"x.0135"x 15'-2"	ST303
	C	4	9"x.0135"x13'-2 1/2"	ST303
	D	4	9"x.0135"x 1'-9"	ST303
ANGLE CLIPS	C1	24	2"x1 1/2"x 1/4"x0'-6"	CD201
#8 SHEAR ANCHOR	SA	12	#8 REBAR x 0'-9"	CD201
DAMPING SADDLE	DUS-1	2	3 1/2"x3 1/2"x 3/8"x3'-7 3/8"	ST298
	DUS-2	2	3 1/2"x3 1/2"x 3/8"x3'-7 3/8"	ST298
CONNECTION BAR	CB	32	3/4"# x 0'-6"	CD201

REF. DRWG	
7-AB4-3 & 31	1-3-68
7-AB4-15 & 16	1-3-68
7-AB4-39-42	1-3-66
SA-124	10-20-67
7-AB3-2	1-3-68
7-AB1-2	2-15-68
7-AB2-6	2-15-68

VOID

FLOOR PANEL DETAILS
FOR
WORLD TRADE CENTER - N.Y.C.
FOR
THE PORT OF NEW YORK AUTHORITY

BLDG. A FLOORS 10-11 (NORTH)

PANEL AIG/E- 20'-0" x 59'-3"

FABRICATION BY LACLEDE STEEL COMPANY

FABRICATED AT MADISON, ILLINOIS

DESIGN DRAWING NO. 7-AB3-4 2-15-68 PLATE

APPROVED FOR FABRICATION BY ______ FOR P.O.N.Y.A. DATE

DRAWN BY [illegible] DATE FEB 24, 1968

APPROVED FOR FABRICATION BY ______ FOR FABRICATOR DATE

CHECKED BY J.R. PAIK DATE FEB 24, 1968

IN CHARGE OF PROD. DEV.

LACLEDE STEEL CO
DETAILED BY A.C. [illegible]

FABRICATION CONT. NO. W.T.C. 221

SHEET NO. FP AIG/E

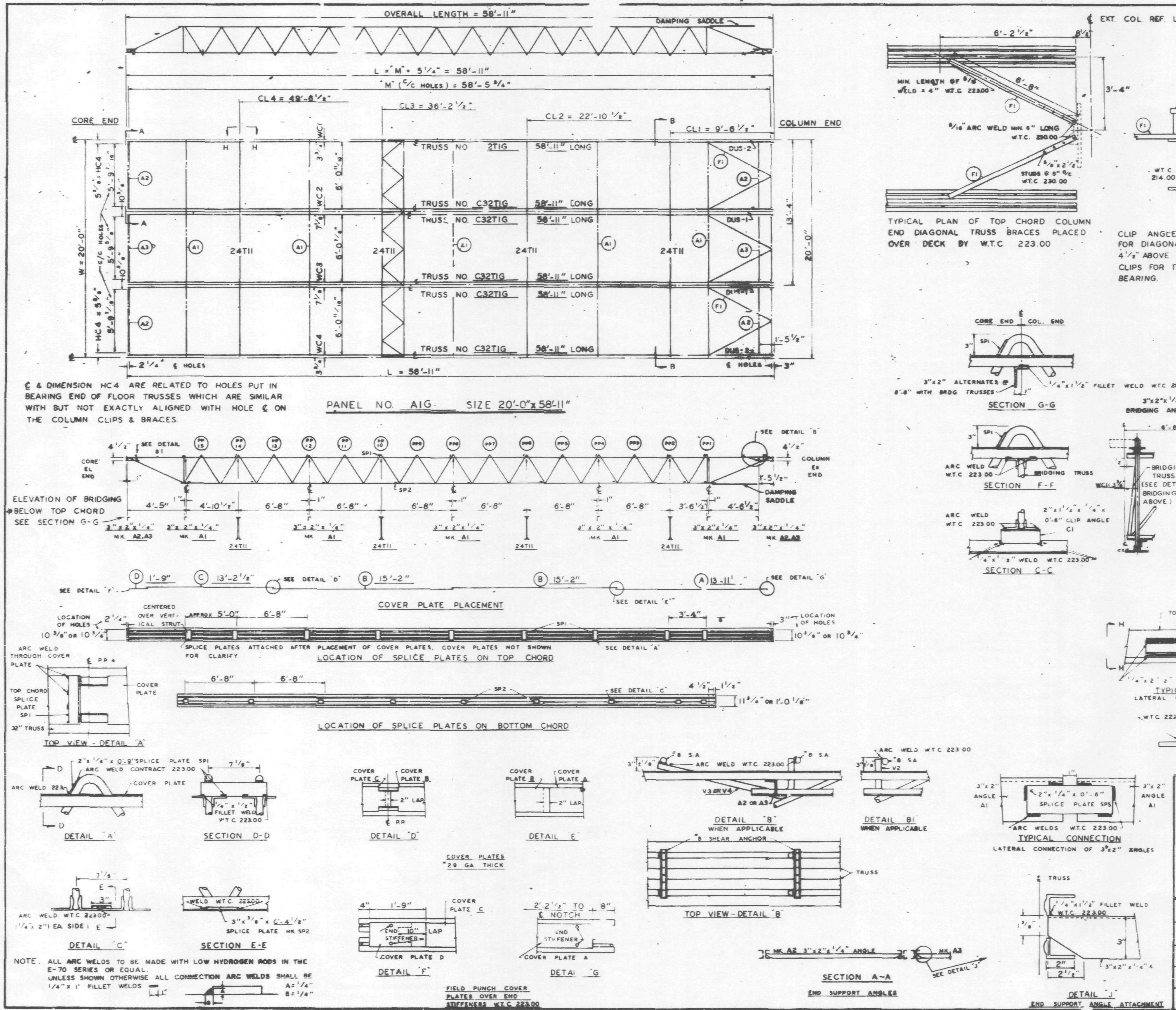

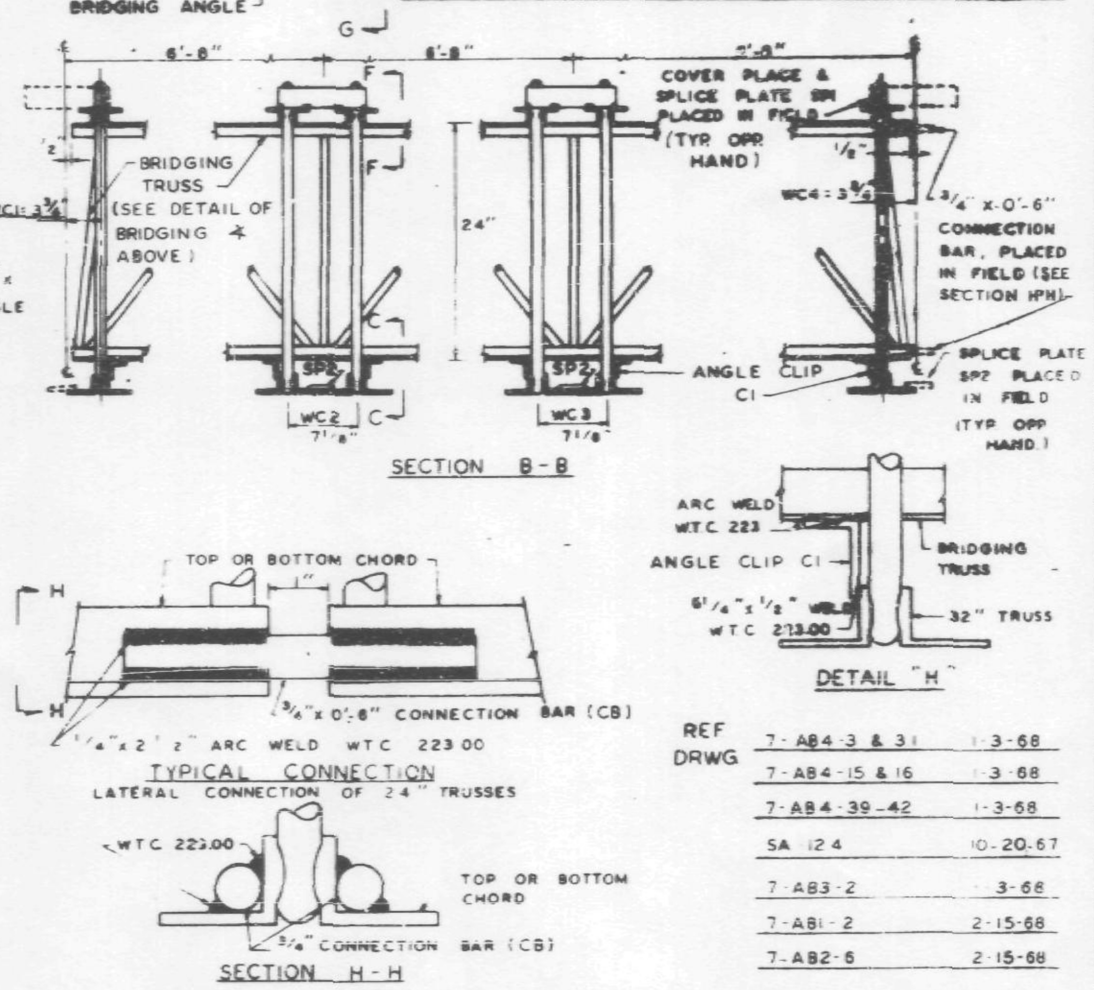

REQUIRED MATERIAL PER PANEL				REF. DRWG
MATERIAL	MK	PCS	SIZE	
FLOOR TRUSSES	TIG	5	C32TIG - 58'-11"	ST201G
BRIDGING TRUSSES	T11	4	24" - 19'-11"	BT211
3"x2"x1/4" ANGLE	A1	5	3"x2"x1/4"x 19'-11"	ST 400
	A2	4	3"x2"x1/4" x 5'-11 5/16"	ST 400
	A3	2	3"x2"x1/4 x 5'-11 1/2"	ST 400
DIAGONAL FLATS	F1	6	1 1/2"x 5/8" x 6'-8"	ST 400
SPLICE PLATES	SP1	2	2"x 1/4"x 0'-9"	CD201
	SP2	36	3"x 3/8"x 0'-4 1/2"	CD201
	SP5	10	2"x 1/4"x 0'-6"	CD201
COVER PLATES	A	4	9"x.0135"x 13'-11 1/2"	ST303
	B	8	9"x.0135"x 15'-2"	ST303
	C	4	9"x.0135"x 13'-2 1/2"	ST303
	D	4	9"x.0135"x 1'-9"	ST303
ANGLE CLIPS	C1	24	2"x1 1/2"x 1/4"x 0'-6"	CD201
#8 SHEAR ANCHOR	SA	12	#8 REBAR x 0'-9"	CD201
DAMPING SADDLE	DUS-1	2	3 1/2"x3 1/2"x 3/8"x3'-7 3/8"	ST298
	DUS-2	2	3 1/2"x3 1/2"x 3/8"x3'-7 3/8"	ST298
CONNECTION BAR	CB	32	3/4" ϕ x 0'-6"	CD201

REF DRWG

7-AB4-3 & 31	1-3-68
7-AB4-15 & 16	1-3-68
7-AB4-39-42	1-3-68
SA 124	10-20-67
7-AB3-2	3-68
7-AB1-2	2-15-68
7-AB2-6	2-15-68

VOID

FLOOR PANEL DETAILS
FOR
WORLD TRADE CENTER - N Y C
FOR
THE PORT OF NEW YORK AUTHORITY

BLDG. A FLOORS 39 (NORTH & SOUTH) 40 (SOUTH)

PANEL AIG - 20'-0" x 58'-11"

FABRICATION BY LACLEDE STEEL COMPANY

FABRICATED AT MADISON, ILLINOIS

DESIGN DRAWING NO. 7-AB3-3 2-15-68 PLATE

APPROVED FOR FABRICATION BY ______ FOR P.O.N.Y.A. DATE ______

APPROVED FOR FABRICATION BY ______ FOR FABRICATOR DATE ______

DRAWN BY [illegible] DATE FEB 24, 1968

CHECKED BY J.R. PAUL DATE FEB 24, 1968

IN CHARGE OF [illegible]

LACLEDE STEEL CO.
DETAILED BY A.C. WEBER

FABRICATION CONT. NO. W.T.C. 221

SHEET NO FP AIG

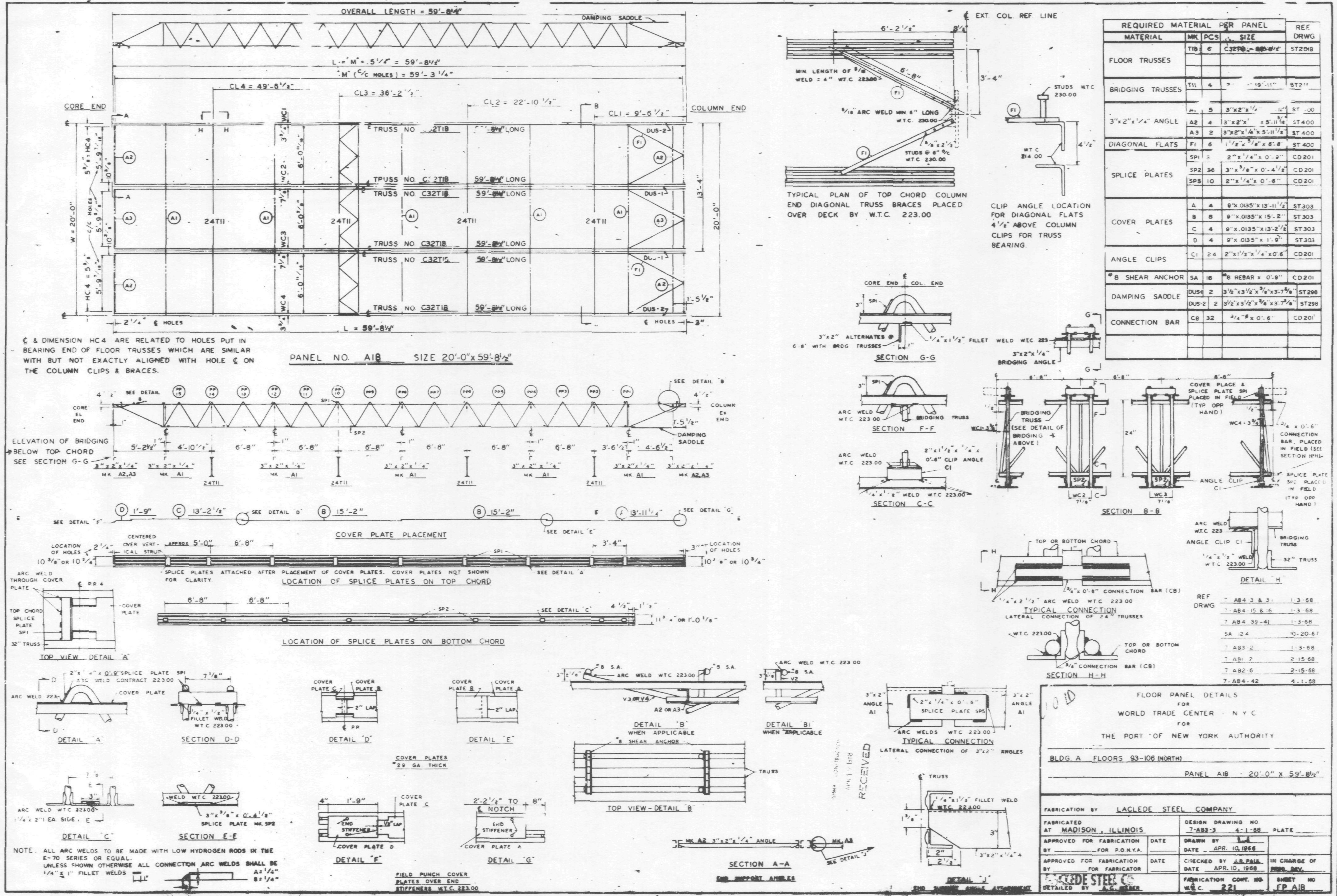

REQUIRED MATERIAL PER PANEL				REF. DRWG.
MATERIAL	MK.	PCS.	SIZE	
FLOOR TRUSSES	T1B	6	C32T1B - [illegible]	ST201B
BRIDGING TRUSSES	T11	4	[illegible] 19'-11"	ST2[illegible]
3"x2"x1/4" ANGLE	A1	5	3"x2"x1/4" [illegible]	ST [illegible]
	A2	4	3"x2"x1/4" x 5'-11 5/16"	ST400
	A3	2	3"x2"x1/4"x 5'-11 1/2"	ST400
DIAGONAL FLATS	F1	6	1 1/2"x 5/8" x 6'-8"	ST400
SPLICE PLATES	SP1	3	2"x 1/4" x 0'-9"	CD201
	SP2	36	3"x 3/8" x 0'-4 1/2"	CD201
	SP5	10	2"x 1/4" x 0'-6"	CD201
COVER PLATES	A	4	9"x.0135"x 13'-11 1/2"	ST303
	B	8	9"x.0135"x 15'-2"	ST303
	C	4	9"x.0135"x 13'-2 1/2"	ST303
	D	4	9"x.0135"x 1'-9"	ST303
ANGLE CLIPS	C1	24	2"x1 1/2"x 1/4"x 0'-6"	CD201
#8 SHEAR ANCHOR	SA	16	#8 REBAR x 0'-9"	CD201
DAMPING SADDLE	DUS-1	2	3 1/2"x3 1/2"x 3/8"x3'-7 5/8"	ST298
	DUS-2	2	3 1/2"x3 1/2"x 3/8"x3'-7 3/8"	ST298
CONNECTION BAR	CB	32	3/4"φ x 0'-6"	CD201

REF. DRWG.

7-AB4-3 & 3-1	1-3-68
7-AB4-15 & 16	1-3-68
7-AB4-39-41	1-3-68
SA 124	10-20-67
7-AB3-2	1-3-68
7-AB1-2	2-15-68
7-AB2-6	2-15-68
7-AB4-42	4-1-68

NOTE: ALL ARC WELDS TO BE MADE WITH LOW HYDROGEN RODS IN THE E-70 SERIES OR EQUAL. UNLESS SHOWN OTHERWISE ALL CONNECTION ARC WELDS SHALL BE 1/4" x 1" FILLET WELDS. A = 1/4", B = 1/4"

FLOOR PANEL DETAILS
FOR
WORLD TRADE CENTER - N.Y.C.
FOR
THE PORT OF NEW YORK AUTHORITY

BLDG. A FLOORS 93-106 (NORTH)

PANEL A1B - 20'-0" x 59'-8 1/2"

FABRICATION BY LACLEDE STEEL COMPANY
FABRICATED AT MADISON, ILLINOIS
DESIGN DRAWING NO. 7-AB3-3 4-1-68 PLATE
APPROVED FOR FABRICATION BY ______ FOR P.O.N.Y.A. DATE ______
DRAWN BY L.A. DATE APR. 10, 1968
APPROVED FOR FABRICATION BY ______ FOR FABRICATOR DATE ______
CHECKED BY J.B.PAIS DATE APR. 10, 1968
IN CHARGE OF PROD. DEV.
LACLEDE STEEL CO.
DETAILED BY A.C. WEBER
FABRICATION CONT. NO. W.T.C. 221
SHEET NO. FP A1B

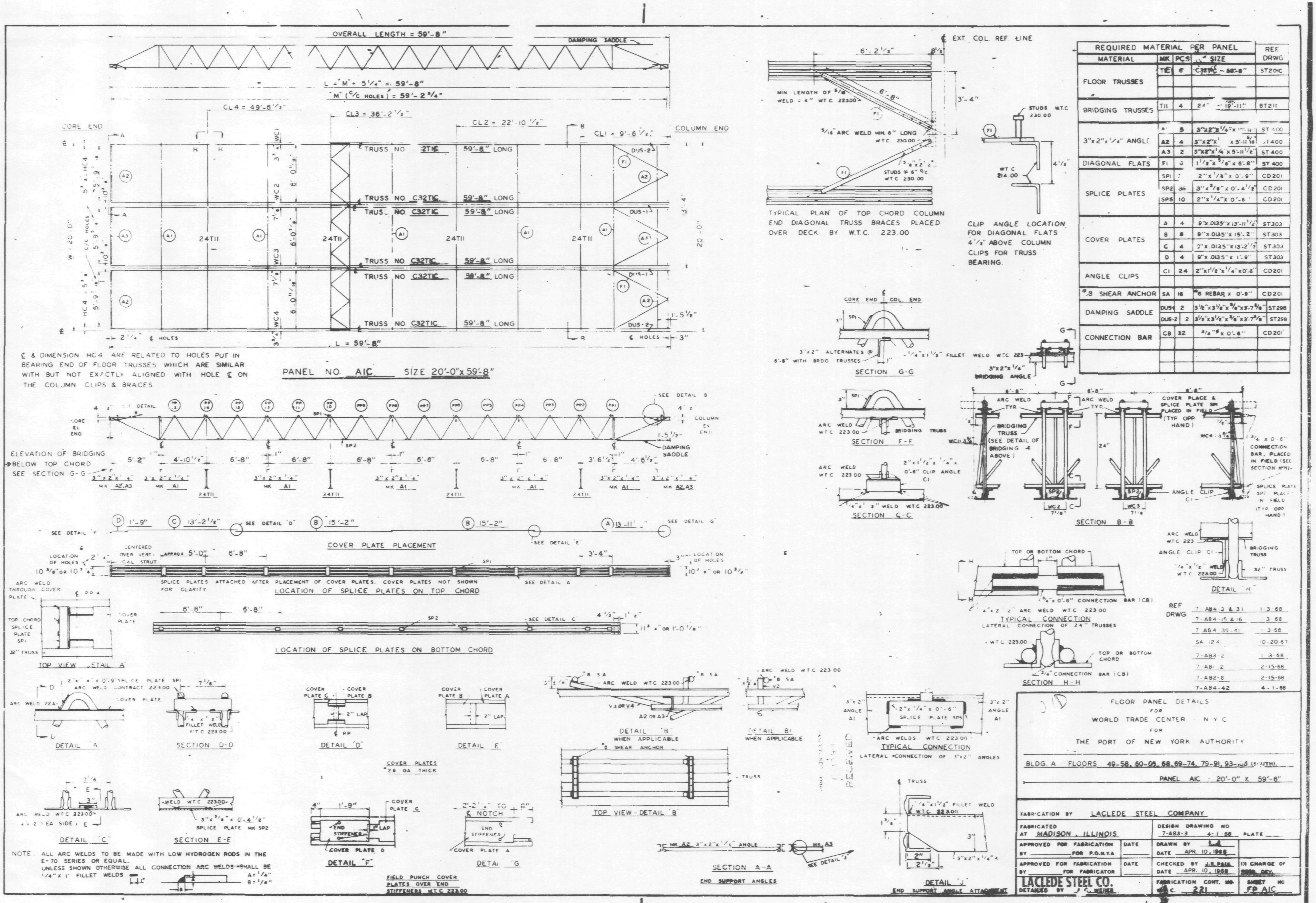

REQUIRED MATERIAL PER PANEL				REF DRWG
MATERIAL	MK	PCS	SIZE	
FLOOR TRUSSES	TIE	6	C32TIC - 59'-8"	ST201C
BRIDGING TRUSSES	T11	4	24" - 19'-11"	BT211
3"x2"x1/4" ANGLE	A1	3	3"x2"x1/4"x 10'-1[illegible]	ST 400
	A2	4	3"x2"x1/4" x 5'-11 5/16"	ST 400
	A3	2	3"x2"x1/4" x 5'-11 1/2"	ST 400
DIAGONAL FLATS	F1	3	1 1/2"x 3/8" x 6'-8"	ST 400
SPLICE PLATES	SP1	[illegible]	2"x 1/2"x 0'-9"	CD201
	SP2	36	3"x 3/8" x 0'-4 1/2"	CD201
	SP5	10	2"x 1/4" x 0'-6"	CD201
COVER PLATES	A	4	9"x.0135"x 13'-11 1/2"	ST303
	B	8	9"x.0135"x 15'-2"	ST303
	C	4	9"x.0135"x 13'-2 1/2"	ST303
	D	4	9"x.0135"x 1'-9"	ST303
ANGLE CLIPS	C1	24	2"x1 1/2"x 1/4"x0'-6"	CD201
#8 SHEAR ANCHOR	SA	16	#8 REBAR x 0'-9"	CD201
DAMPING SADDLE	DUS-1	2	3 1/2"x3 1/2"x 3/8"x3'-7 3/8"	ST298
	DUS-2	2	3 1/2"x3 1/2"x 3/8"x3'-7 3/8"	ST298
CONNECTION BAR	CB	32	3/4" ø x 0'-6"	CD201

REF DRWG

7-AB4-3 & 31	1-3-68
7-AB4-15 & 16	1-3-68
7-AB4-39-41	1-3-68
SA 12.4	10-20-67
7-AB3-2	1-3-68
7-AB1-2	2-15-68
7-AB2-6	2-15-68
7-AB4-42	4-1-68

FLOOR PANEL DETAILS
FOR
WORLD TRADE CENTER - N.Y.C.
FOR
THE PORT OF NEW YORK AUTHORITY

BLDG. A FLOORS 49-58, 60-66, 68, 69-74, 79-91, 93-106 (SOUTH).

PANEL AIC - 20'-0" X 59'-8"

FABRICATION BY LACLEDE STEEL COMPANY

FABRICATED AT MADISON, ILLINOIS

DESIGN DRAWING NO 7-AB3-3 4-1-68 PLATE ____

APPROVED FOR FABRICATION BY ____ FOR P.O.N.Y.A. DATE ____

DRAWN BY [illegible] DATE APR. 10, 1968

APPROVED FOR FABRICATION BY ____ FOR FABRICATOR DATE ____

CHECKED BY J.R. PAUL DATE APR. 10, 1968

IN CHARGE OF [illegible] DEV.

LACLEDE STEEL CO.
DETAILED BY J. C. WEINER

FABRICATION CONT. NO. W.T.C. 221

SHEET NO FP AIC

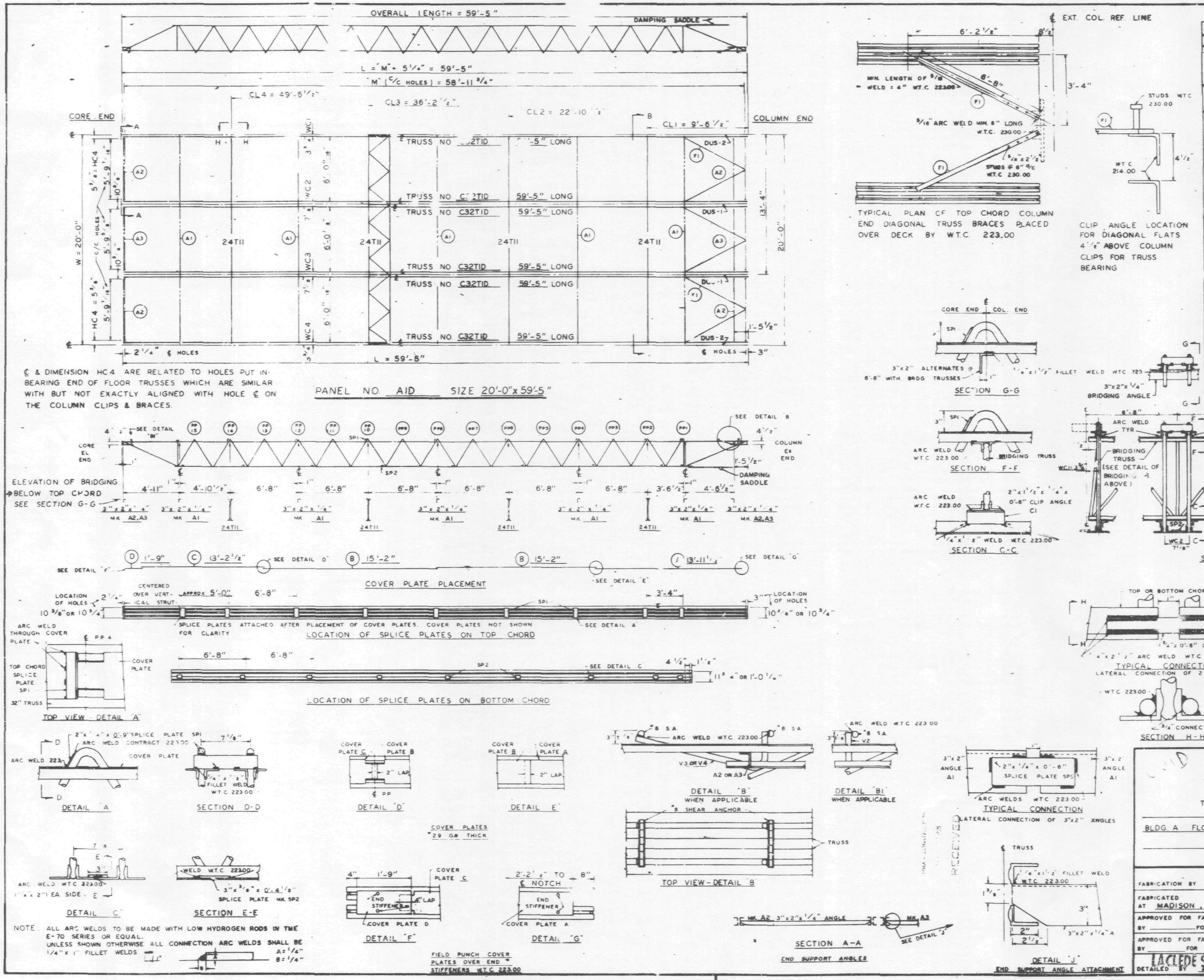

NOTE: ALL ARC WELDS TO BE MADE WITH LOW HYDROGEN RODS IN THE E-70 SERIES OR EQUAL.
UNLESS SHOWN OTHERWISE ALL CONNECTION ARC WELDS SHALL BE 1/4" x 1" FILLET WELDS

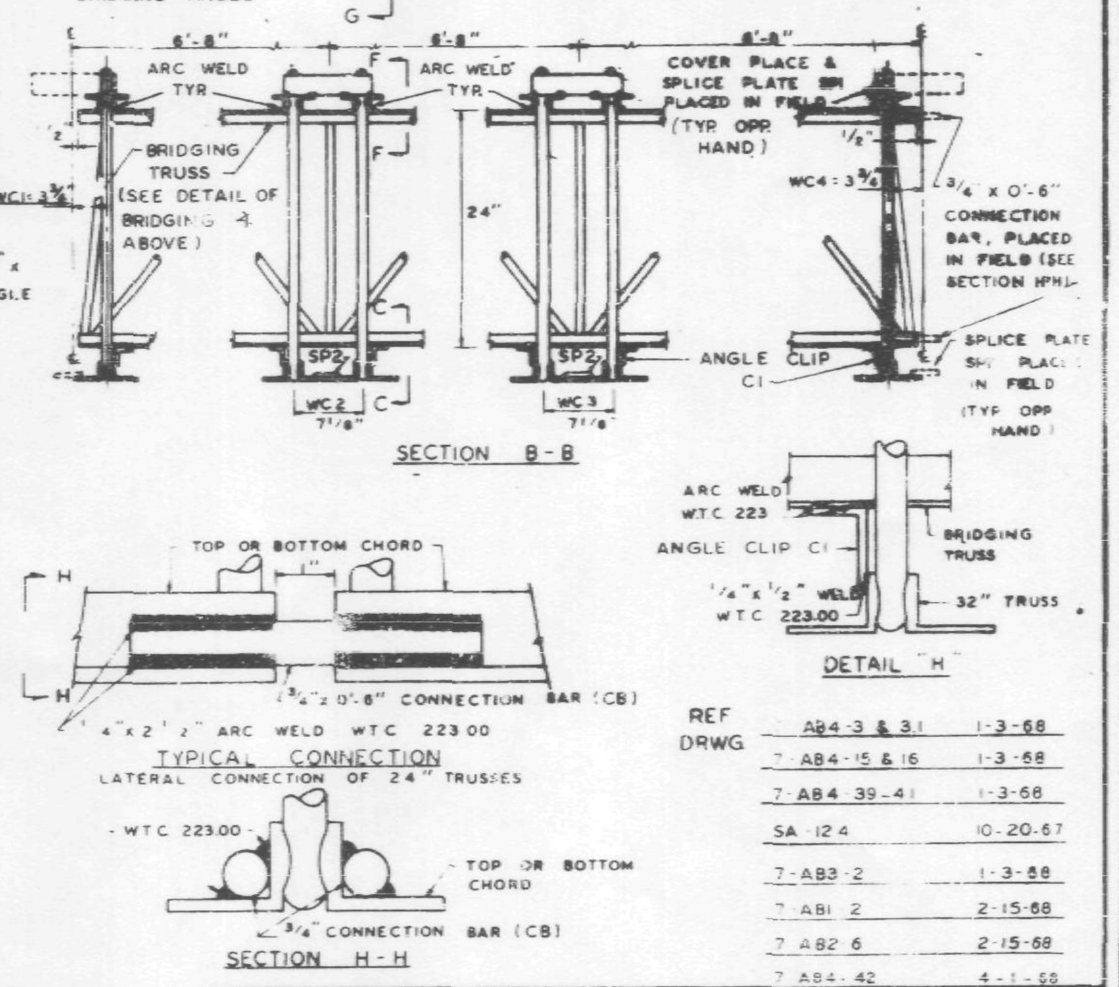

REQUIRED MATERIAL PER PANEL				REF DRWG
MATERIAL	MK	PCS	SIZE	
FLOOR TRUSSES	TID	6	C32TID - 59'-5"	ST201D
BRIDGING TRUSSES	T11	4	24 - 19'-11"	ST211
3"x2"x1/4" ANGLE	A1	5	3"x2"x1/4" -11"	ST 400
	A2	4	3"x2"x1/4" x 5'-11 5/8"	ST400
	A3	2	3"x2"x1/4"x 5'-11 1/2"	ST 400
DIAGONAL FLATS	F1	6	1 1/2"x 5/8" x 6'-8"	ST 400
SPLICE PLATES	SP1	3	2"x 1/4" x 0'-9"	CD201
	SP2	36	3"x 3/8" x 0'-4 1/2"	CD201
	SP5	10	2"x 1/4" x 0'-6"	CD201
COVER PLATES	A	4	9"x.0135"x 13'-11 1/2"	ST303
	B	8	9"x.0135"x 15'-2"	ST303
	C	4	9"x.0135"x 13'-2 1/2"	ST303
	D	4	9"x.0135"x 1'-9"	ST303
ANGLE CLIPS	C1	24	2"x1 1/2"x 1/4"x 0'-6"	CD201
#8 SHEAR ANCHOR	SA	16	#8 REBAR x 0'-9"	CD201
DAMPING SADDLE	DUS-1	2	3 1/2"x3 1/2"x 3/8"x3'-7 3/8"	ST298
	DUS-2	2	3 1/2"x3 1/2"x 3/8"x3'-7 3/8"	ST298
CONNECTION BAR	CB	32	3/4" ø x 0'-6"	CD201

REF DRWG

AB4-3 & 3.1	1-3-68
7-AB4-15 & 16	1-3-68
7-AB4-39-41	1-3-68
SA-124	10-20-67
7-AB3-2	1-3-68
7-AB1-2	2-15-68
7-AB2-6	2-15-68
7-AB4-42	4-1-68

FLOOR PANEL DETAILS
FOR
WORLD TRADE CENTER - N.Y.C.
FOR
THE PORT OF NEW YORK AUTHORITY

BLDG. A FLOORS 81-82 (NORTH)

PANEL AID - 20'-0" x 59'-5"

FABRICATION BY LACLEDE STEEL COMPANY

FABRICATED AT MADISON, ILLINOIS		DESIGN DRAWING NO 7-AB3-3 4-1-68 PLATE	
APPROVED FOR FABRICATION BY ______ FOR P.O.N.Y.A.	DATE	DRAWN BY [illegible] DATE APR. 10, 1968	
APPROVED FOR FABRICATION BY ______ FOR FABRICATOR	DATE	CHECKED BY J.R. [illegible] DATE APR. 10, 1968	IN CHARGE OF PROD. DEV.
LACLEDE STEEL CO. DETAILED BY A.C. WEBER		FABRICATION CONT. NO. W.T.C. 221	SHEET NO FP AID

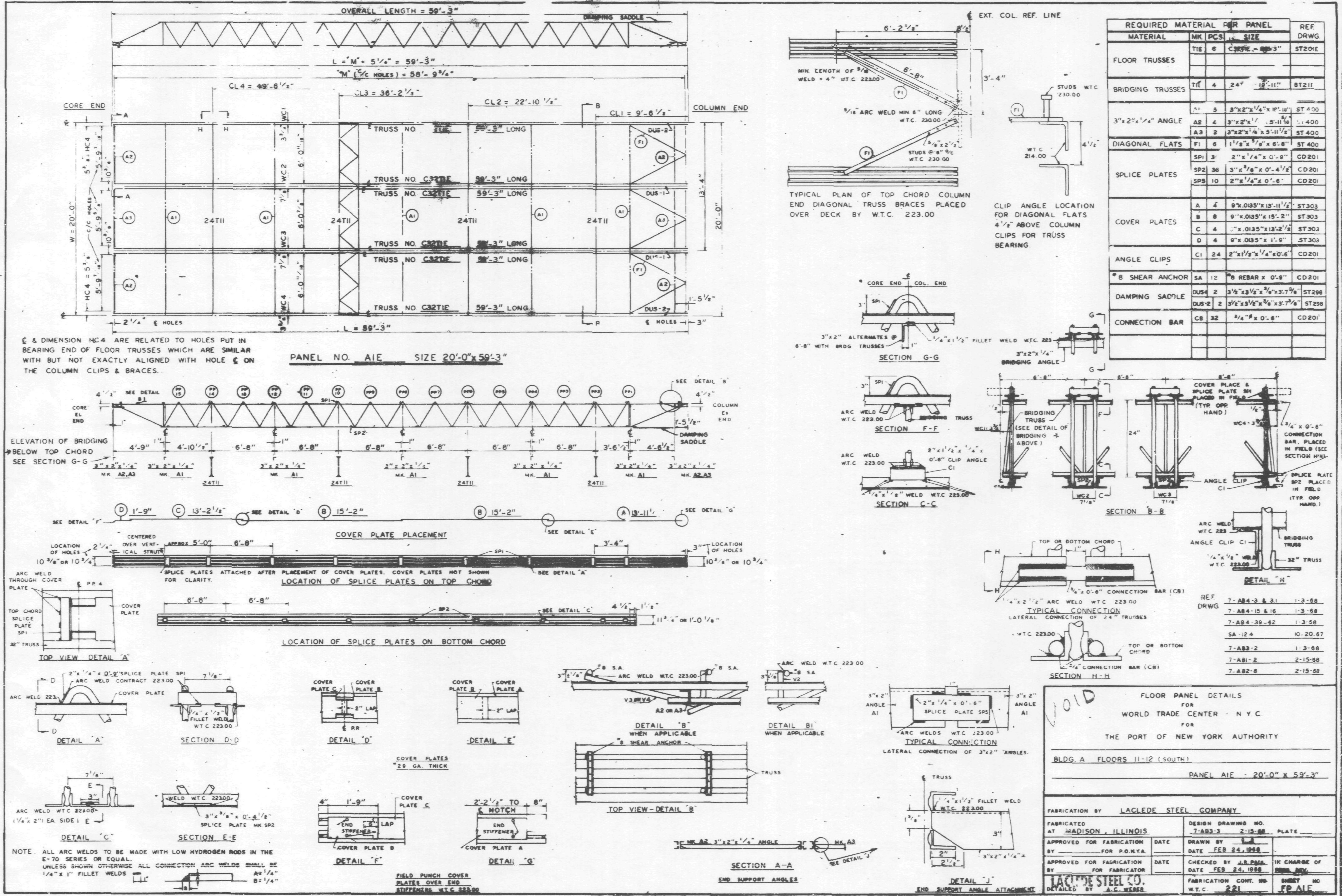

REQUIRED MATERIAL PER PANEL				REF. DRWG
MATERIAL	MK.	PCS.	SIZE	
FLOOR TRUSSES	TIE	6	C32TIE - 59'-3"	ST201E
BRIDGING TRUSSES	TII	4	24T - 19'-11"	BT211
3"x2"x1/4" ANGLE	A1	5	3"x2"x1/4"x 19'-11"	ST 400
	A2	4	3"x2"x1/4" x 5'-11 5/16"	ST 400
	A3	2	3"x2"x1/4"x 5'-11 1/2"	ST 400
DIAGONAL FLATS	F1	6	1 1/2"x 5/8" x 6'-8"	ST 400
SPLICE PLATES	SP1	3	2"x 1/4" x 0'-9"	CD201
	SP2	36	3"x 3/8" x 0'-4 1/2"	CD201
	SP5	10	2"x 1/4" x 0'-6"	CD201
COVER PLATES	A	4	9"x.0135"x 13'-11 1/2"	ST303
	B	8	9"x.0135"x 15'-2"	ST303
	C	4	9"x.0135"x 13'-2 1/2"	ST303
	D	4	9"x.0135"x 1'-9"	ST303
ANGLE CLIPS	C1	24	2"x1 1/2"x 1/4"x0'-6"	CD201
#8 SHEAR ANCHOR	SA	12	#8 REBAR x 0'-9"	CD201
DAMPING SADDLE	DUS-1	2	3 1/2"x3 1/2"x 3/8"x3'-7 3/8"	ST298
	DUS-2	2	3 1/2"x3 1/2"x 3/8"x3'-7 3/8"	ST298
CONNECTION BAR	CB	32	3/4" ϕ x 0'-6"	CD201

REF. DRWG

7-AB4-3 & 3.1	1-3-68
7-AB4-15 & 16	1-3-68
7-AB4-39-42	1-3-68
SA-124	10-20-67
7-AB3-2	1-3-68
7-AB1-2	2-15-68
7-AB2-8	2-15-68

VOID

FLOOR PANEL DETAILS
FOR
WORLD TRADE CENTER - N.Y.C.
FOR
THE PORT OF NEW YORK AUTHORITY

BLDG. A FLOORS 11-12 (SOUTH)

PANEL AIE - 20'-0" x 59'-3"

FABRICATION BY LACLEDE STEEL COMPANY

FABRICATED AT MADISON, ILLINOIS

DESIGN DRAWING NO. 7-AB3-3 2-15-68 PLATE

APPROVED FOR FABRICATION BY ______ FOR P.O.N.Y.A. DATE

DRAWN BY ______ DATE FEB 24, 1968

APPROVED FOR FABRICATION BY ______ FOR FABRICATOR DATE

CHECKED BY J.R. PAUL DATE FEB 24, 1968

IN CHARGE OF [illegible]

LACLEDE STEEL CO.
DETAILED BY A.C. WEBER

FABRICATION CONT. NO. W.T.C. 221

SHEET NO. FP AIE

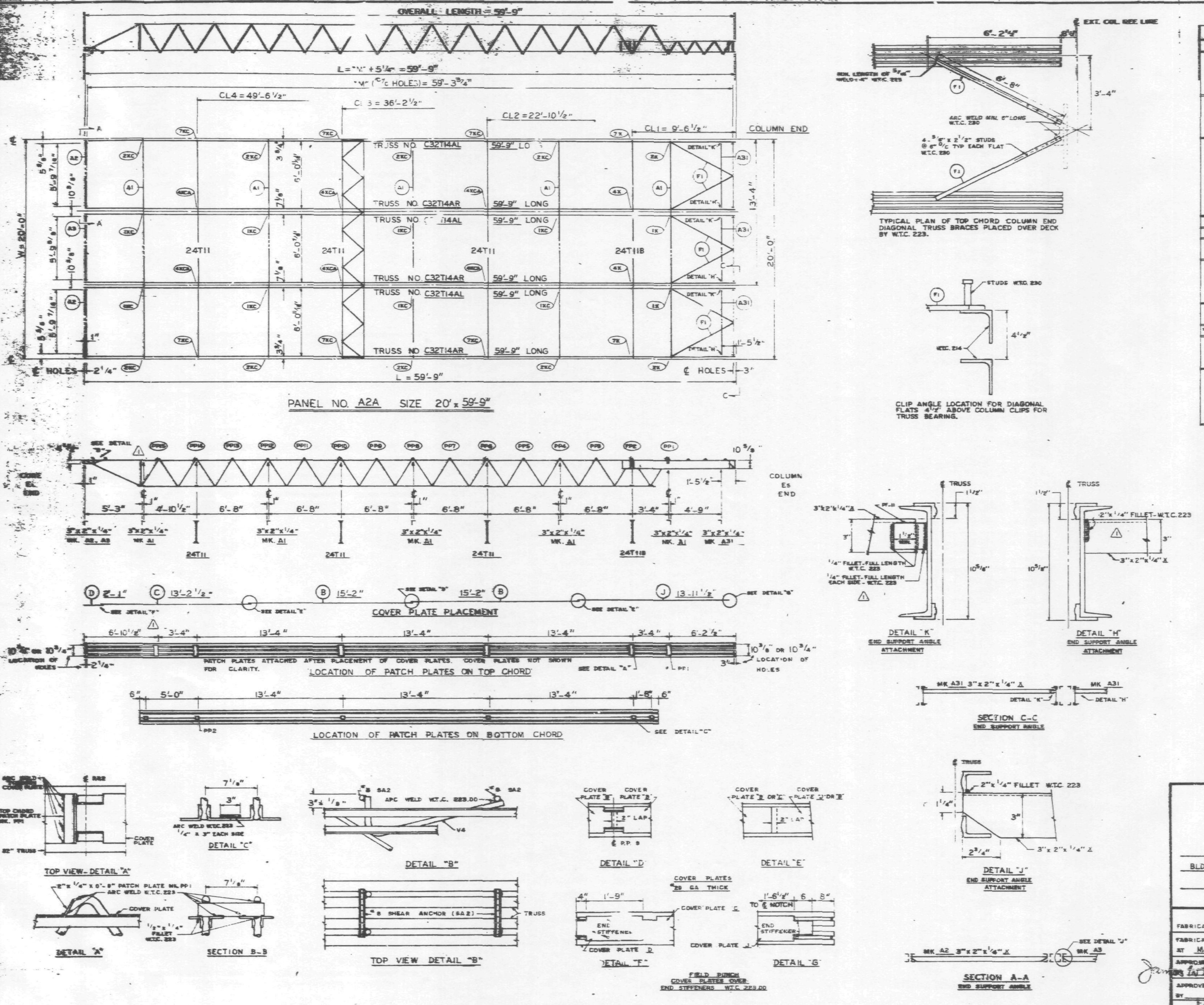

REQUIRED MATERIAL PER PANEL				REF.
MATERIAL	MK.	PCS.	SIZE	DWG.
FLOOR TRUSSES	[illegible]	3	C32T14AL x 59'-9"	ST 214AL
	[illegible]	3	C32T14AR x 59'-9"	ST 214A[illegible]
BRIDGING TRUSSES	T11	3	24T11 x 19'-11"	BT 211
	T11B	1	24T11B x 9'-11"	BT 211B
3"x 2"x 1/4" ANGLE	A1	5	3"x2"x1/4"x 19'-11"	ST 403
	A2	2	3"x2"x1/4"x 5'-11 3/	ST 403
	A3	1	3"x2"x1/4"x 5-11 3	ST 403
	A31	3	3"x2"x1 x 5'-8 1/8"	ST 410
CLOSURE PLATES	PF-11	3	3" x 1/4" x 0'-2 3/8"	ST 412
DIAGONAL FLATS	F1	6	1 1/2" x 5/8" x 6'-8"	ST 402
PATCH PLATES	PP1	24	2" x 1/4" x 0'-9"	ST 400
	PP2	24	3" x 3/8" x 0'-3"	ST 400
COVER PLATES	B	8	9" x .0135" x 15'-2"	ST 303
	C	4	9" x .0135" x 13'-2 1/2"	ST 303
	D	4	9" x .0135" x 2'-1"	ST 303
	J	4	9" x .0135" x 13'-11 1/2"	ST 304
ANGLE CLIPS	C1	24	2"x 1 1/2"x .25" x 0'-6"	ST 400
#8 SHEAR ANCHOR	SA2	8	#8 REBAR x 0'-9"	ST 400
CONNECTION BAR	CB1	10	1" ⌀ x 1'-3"	ST 400
CONNECTION PLATES	P1	8	3 1/2" x 3/8" x 0'-5 1/2"	ST 400
	P2	8	4 1/2" x .39" x 0'-9"	ST 400
	P3	8	4 1/2" x .39" x 1'-0"	ST 400
	P9	8	3" x 1/2" x 1'-2"	ST 409

ALL ARC WELDS TO BE MADE WITH LOW HYDROGEN RODS IN THE E-70 SERIES OR EQUAL.
LETTERS AND NUMBERS IN ELLIPSES INDICATE CONNECTION DETAILS, i.e., (1K).
ALL CONNECTION DETAILS FOR FLOORS 25, 59 & 92 ARE SHOWN ON SHEETS CD 210 THRU CD 229.
UNLESS OTHERWISE SHOWN ALL CONNECTION ARC WELDS SHALL BE 1"x1/4" FULL THROAT FILLET.

NO.	DATE		REVISION	BY
1	2-4-69	AS NOTED		G.D.C.

REF. DRWG.		
	7-AB3-25	10-4-68
	7-AB3-24	8-15-68
	7-AB1-13	10-4-68
	7-AB2-5	7-22-68
	7-AB2-15	10-4-68

FLOOR PANEL DETAILS
FOR
WORLD TRADE CENTER - N.Y.C.
FOR
THE PORT OF NEW YORK AUTHORITY

BLDG. A FLOORS 25 (NORTH & SOUTH) 59 (NORTH)
△1
PANEL A2A - 20' x 59'-9"

FABRICATION BY LACLEDE STEEL COMPANY
FABRICATED AT MADISON, ILLINOIS
DESIGN DRAWING NO. ______ PLATE ______
APPROVED FOR FABRICATION BY [signature] FOR P.O.N.Y.A. DATE [illegible]
DRAWN BY [illegible] DATE DEC. 5, 1968
APPROVED FOR FABRICATION BY ______ FOR FABRICATOR DATE ______
CHECKED BY T.H. CHUNG DATE DEC. 5, 1968
IN CHARGE OF PROD. DEK
LACLEDE STEEL CO.
DETAILED BY A.C. WEBER
FABRICATION CONT. NO. W.T.C. 221
SHEET NO. FP A2A

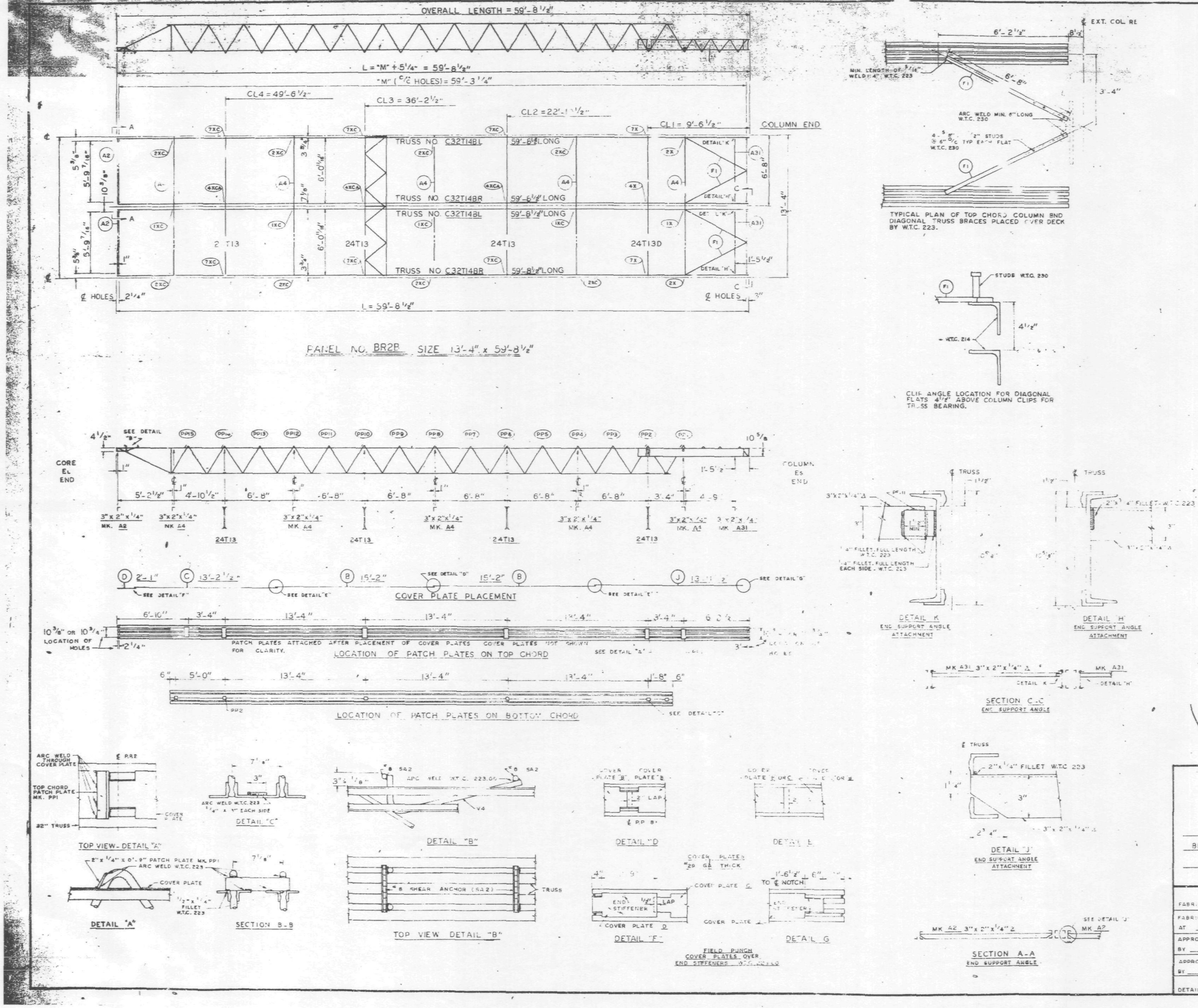

REQUIRED MATERIAL PER PANEL				REF.
MATERIAL	MK.	PCS.	SIZE	DRWG.
FLOOR TRUSSES	T14BL	2	C32T14BL x 59'-8 1/2"	ST 214BL
	T14BR	2	C32T14BR x 59'-8 1/2"	ST 214BL
BRIDGING TRUSSES	T13	3	24T13 x 13'-3"	BT 213
	T13D	1	24T13D x 13'-3"	BT 213D
3" x 2" x 1/4" ANGLE	A2	2	3"x2"x1/4"x5'-11 9/16"	ST 403
	A4	5	3"x2"x1/4"x13'-3"	ST 403
	A31	2	3"x2"x1/4"x5'-8 1/8"	ST 410
CLOSURE PLATES	PF-11	2	3" x 1/4" x 0'-2 3/8"	ST 412
DIAGONAL FLATS	F1	4	1 1/2" x 5/8" x 6'-8"	ST 402
PATCH PLATES	PP1	12	2" x 1/4" x 0'-9"	ST 400
	PP2	12	3" x 3/8" x 0'-3"	ST 400
COVER PLATES	B	4	9"x .0135" x 15'-2"	ST 303
	C	2	9"x .0135" x 13'-2 1/2"	ST 303
	D	2	9"x .0135" x 2'-1"	ST 303
	J	2	9"x .0135" x 13'-11 1/2"	ST 304
ANGLE CLIPS	C1	16	2"x 1 1/2"x .25"x 6"	ST 400
#8 SHEAR ANCHOR	SA2	4	#8 REBAR x 0'-9"	ST 400
CONNECTION BAR	CB1	5	1" ø x 1'-3"	ST 400
CONNECTION PLATES	P1	4	3 1/2"x 3/8"x 0'-6 1/2"	ST 400
	P2	4	4 1/2" x .39" x 0'-9"	ST 400
	P3	4	4 1/2" x .39" x 1'-0"	ST 400
	P9	4	3" x 1/2" x 1'-2"	ST 409

ALL ARC WELDS TO BE MADE WITH LOW HYDROGEN RODS IN THE E-70 SERIES OR EQUAL.
LETTERS AND NUMBERS IN ELLIPSES INDICATE CONNECTION DETAILS, ie., (1X)
ALL CONNECTION DETAILS FOR FLOORS 25, 59 & 92 ARE SHOWN ON SHEETS CD 210 THRU CD 229.
UNLESS OTHERWISE SHOWN ALL CONNECTION ARC WELDS SHALL BE 1" x 1/4" FULL THROAT FILLET.

NO.	DATE	REVISION	BY

REF DRWG.

7-AB3-27	10-4-68
7-AB1-13	10-4-68
7-AB2-8	7-22-68
7-AB4-28	7-22-68
SA-124	10-11-68
7-AB3-24	8-15-68

Void

FLOOR PANEL DETAILS
FOR
WORLD TRADE CENTER - N.Y.C.
FOR
THE PORT OF NEW YORK AUTHORITY

BLDG. A FLOORS 92 (NORTH)

PANEL BR2B-13'-4" x 59'-8 1/2"

FABRICATION BY LACLEDE STEEL COMPANY

FABRICATED AT MADISON, ILLINOIS		DESIGN DRAWING NO 7-AB3-27	PLATE
APPROVED FOR FABRICATION BY ____ FOR P.O.N.Y.A	DATE	DRAWN BY [signature] DATE APRIL 28, 1969	
APPROVED FOR FABRICATION BY ____ FOR FABRICATOR	DATE	CHECKED BY T.M. CHURA DATE APRIL 28, 1969	IN CHARGE OF PROD. DEV.
DETAILED BY A.C. WEBER		FABRICATION CONT NO W.T.C. 221	SHEET NO FP BR2B

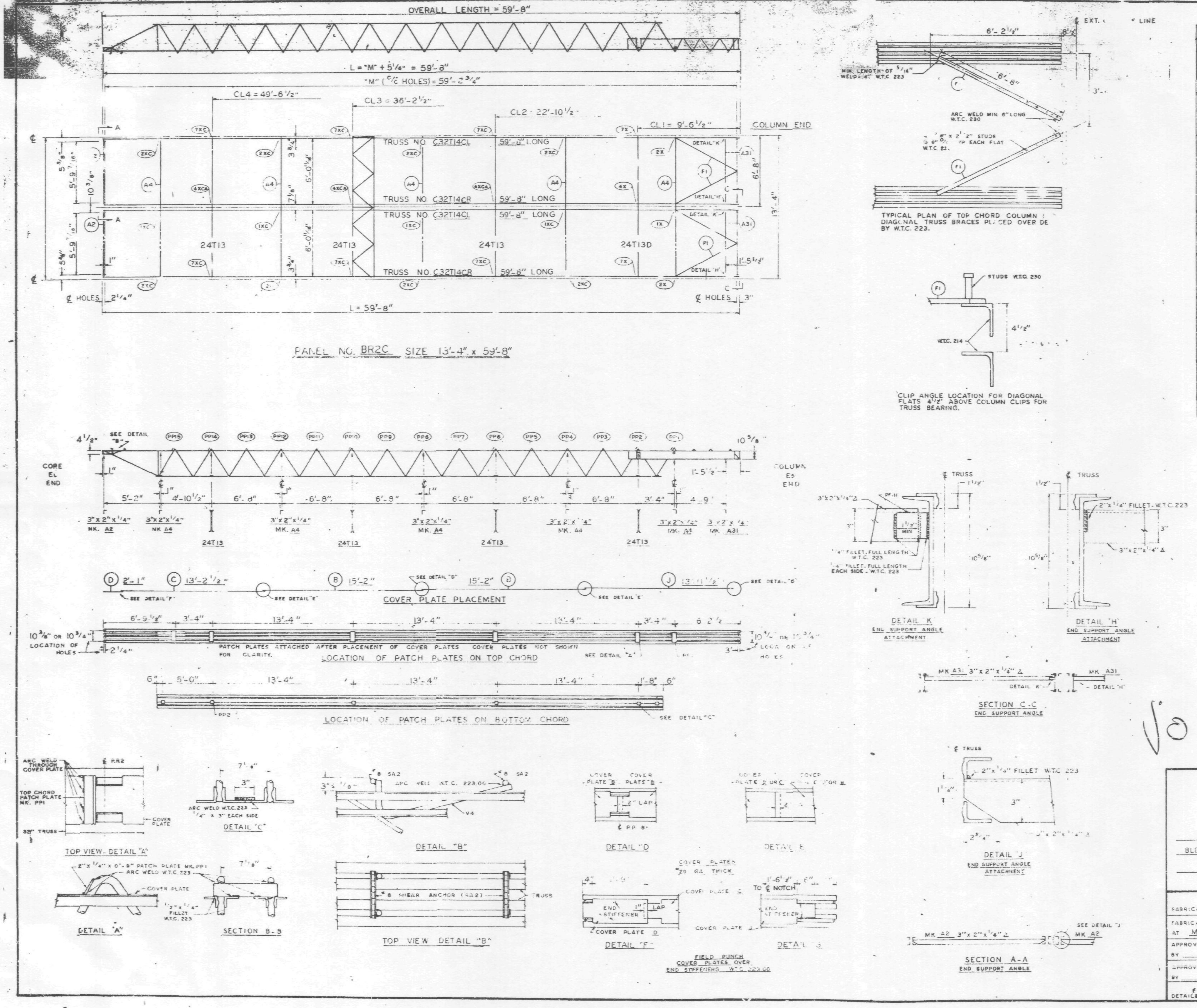

REQUIRED MATERIAL PER PANEL				REF. DRWG.
MATERIAL	MK.	PCS.	SIZE	
FLOOR TRUSSES	T14CL	2	C32T14CL x 59'-8"	ST 214CL
	T14CR	2	C32T14CR x 59'-8"	ST 214CL
BRIDGING TRUSSES	T13	3	24T13 x 13'-3"	BT 213
	T13D	1	24T13D x 13'-3"	BT 213D
3" x 2" x 1/4" ANGLE	A2	2	3" x 2" x 1/4" x 5'-11 9/16"	ST 403
	A4	5	3" x 2" x 1/4" x 13'-3"	ST 403
	A31	2	3" x 2" x 1/4" x 5'-8 1/8"	ST 410
CLOSURE PLATES	PF-11	2	3" x 1/4" x 0'-2 3/8"	ST 412
DIAGONAL FLATS	F1	4	1 1/2" x 5/8" x 5'-8"	ST 402
PATCH PLATES	PP1	12	2" x 1/4" x 0'-9"	ST 400
	PP2	12	3" x 3/8" x 0'-3"	ST 400
COVER PLATES	B	4	9" x .0135" x 15'-2"	ST 303
	C	2	9" x .0135" x 13'-2 1/2"	ST 303
	D	2	9" x .0135" x 2'-1"	ST 303
	J	2	9" x .0135" x 13'-11 1/2"	ST 304
ANGLE CLIPS	C1	16	2" x 1 1/2" x .25" x 6"	ST 400
#8 SHEAR ANCHOR	SA2	4	#8 REBAR x 0'-9"	ST 400
CONNECTION BAR	CB1	5	1" ø x 1'-3"	ST 400
CONNECTION PLATES	P1	4	3 1/2" x 3/8" x 0'-6 1/2"	ST 400
	P2	4	4 1/2" x .39" x 0'-9"	ST 400
	P3	4	4 1/2" x .39" x 1'-0"	ST 400
	P9	4	3" x 1/2" x 1'-2"	ST 409

ALL ARC WELDS TO BE MADE WITH LOW HYDROGEN RODS IN THE E-70 SERIES OR EQUAL.
LETTERS AND NUMBERS IN ELLIPSES INDICATE CONNECTION DETAILS, ie., (1X).
ALL CONNECTION DETAILS FOR FLOORS 25, 59 & 92 ARE SHOWN ON SHEETS CD 210 THRU CD 229.
UNLESS OTHERWISE SHOWN ALL CONNECTION ARC WELDS SHALL BE 1" x 1/4" FULL THROAT FILLET.

A = 1/4"
B = 1/4"

NO.	DATE	REVISION	BY

REF DRWG.

7-AB3-27	10-4-68
7-AB1-13	10-4-68
7-AB2-8	7-22-68
7-AB4-28	7-22-68
SA-124	10-11-68
7-AB3-24	8-15-68

VOID

FLOOR PANEL DETAILS
FOR
WORLD TRADE CENTER - N.Y.C.
FOR
THE PORT OF NEW YORK AUTHORITY

BLDG. A FLOORS 59 & 92 (SOUTH)

PANEL BR2C-13'-4" x 59'-8"

FABRICATION BY LACLEDE STEEL COMPANY
FABRICATED AT MADISON, ILLINOIS
DESIGN DRAWING NO 7-AB3-27 PLATE
APPROVED FOR FABRICATION BY FOR P.O.N.Y.A DATE
DRAWN BY luh DATE APRIL 28, 1969
APPROVED FOR FABRICATION BY FOR FABRICATOR DATE
CHECKED BY T.M. CHUBA DATE APRIL 28, 1969
IN CHARGE OF PROD. DEV.
DETAILED BY A.C. WEBER
FABRICATION CONT NO W.T.C. 221
SHEET NO FP BR2C

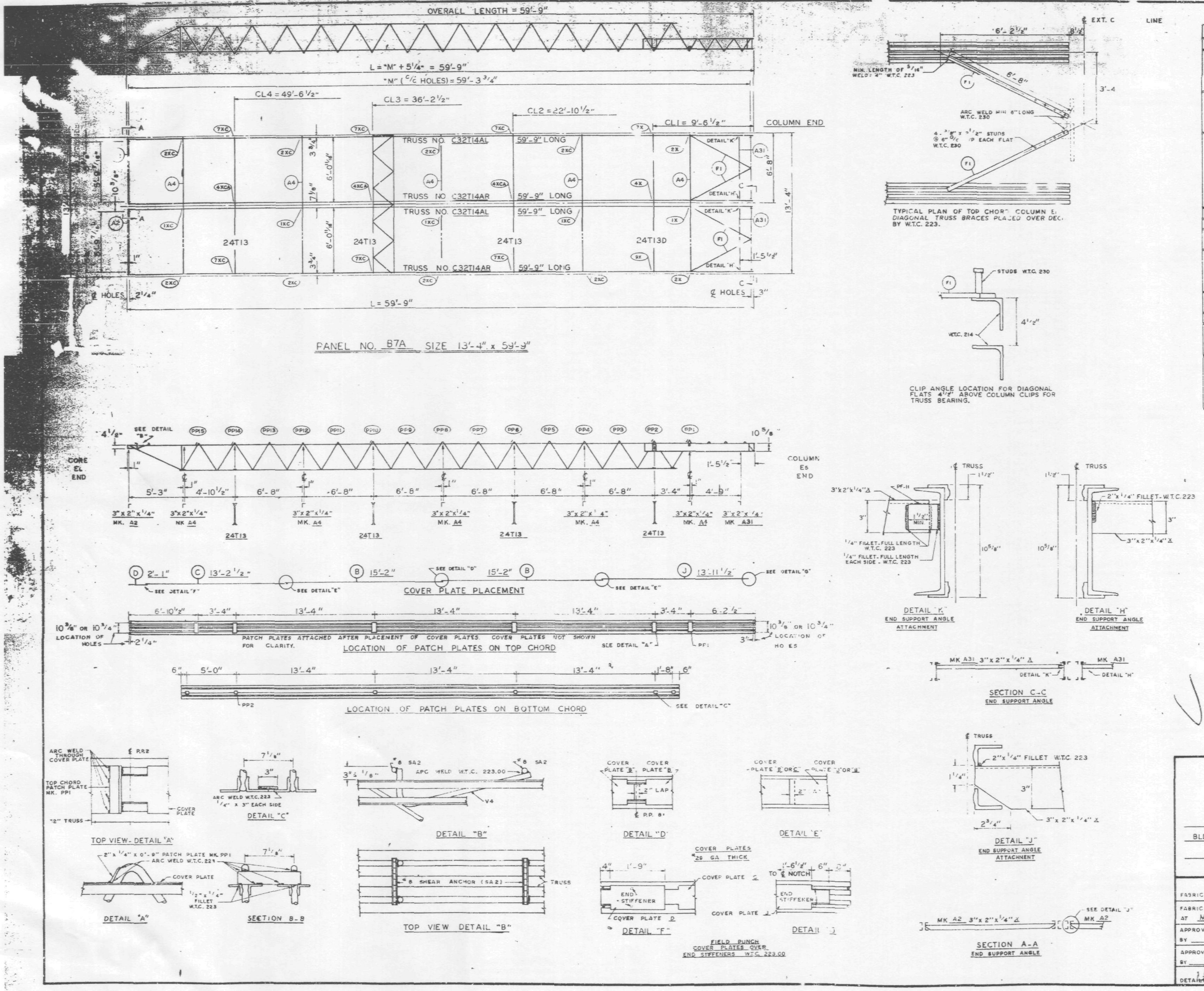

REQUIRED MATERIAL PER PANEL				REF.
MATERIAL	MK.	PCS.	SIZE	DRWG.
FLOOR TRUSSES	T14AL	2	C32T14AL x 59'-9"	ST 214AL
	T14AR	2	C32T14AR x 59'-9"	ST 214AL
BRIDGING TRUSSES	T13	3	24T13 x 13'-3"	BT 213
	T13D	1	24T13D x 13'-3"	BT 213D
3"x 2"x 1/4" ANGLE	A2	2	3"x2"x1/4"x 5'-11 9/16"	ST 403
	A4	5	3"x2"x1/4"x13'-3"	ST 403
	A31	2	3"x2"x1/4"x5'-8 1/8"	ST 410
CLOSURE PLATES	PF-11	2	3" x 1/4" x 0'-2 3/8"	ST 412
DIAGONAL FLATS	F1	4	1 1/2" x 5/8" x 6'-8"	ST 402
PATCH PLATES	PP1	12	2" x 1/4" x 0'-9"	ST 400
	PP2	12	3" x 3/8" x 0'-3"	ST 400
COVER PLATES	B	4	9"x .0135" x 15'-2"	ST 303
	C	2	9"x .0135" x 13'-2 1/2"	ST 303
	D	2	9"x .0135" x 2'-1"	ST 303
	J	2	9"x .0135" x 13'-11 1/2"	ST 304
ANGLE CLIPS	C1	16	2"x 1 1/2"x.25"x 6"	ST 400
#8 SHEAR ANCHOR	SA2	4	#8 REBAR x 0'-9"	ST 400
CONNECTION BAR	CB1	5	1" Ø x 1'-3"	ST 400
CONNECTION PLATES	P1	4	3 1/2"x 3/8"x 0'-6 1/2"	ST 400
	P2	4	4 1/2"x.39"x 0'-9"	ST 400
	P3	4	4 1/2"x .39"x 1'-0"	ST 400
	P9	4	3"x 1/2"x 1'-2"	ST 409

ALL ARC WELDS TO BE MADE WITH LOW HYDROGEN RODS IN THE E-70 SERIES OR EQUAL.
LETTERS AND NUMBERS IN ELLIPSES INDICATE CONNECTION DETAILS, ie., (1X).
ALL CONNECTION DETAILS FOR FLOORS 25, 59 & 92 ARE SHOWN ON SHEETS CD 210 THRU CD 229.
UNLESS OTHERWISE SHOWN ALL CONNECTION ARC WELDS SHALL BE 1"x 1/4" FULL THROAT FILLET.

A = 1/4"
B = 1/4"

NO.	DATE	REVISION	BY

VOID

REF. DRWG.		
	7-AB3-26	10-4-68
	7-AB1-13	10-4-68
	7-AB2-8	7-22-68
	7-AB4-28	7-22-68
	58-124	3-24-69
	7-AB3-24	8-15-68

FLOOR PANEL DETAILS
FOR
WORLD TRADE CENTER - N.Y.C.
FOR
THE PORT OF NEW YORK AUTHORITY

BLDG. B FLOORS 25 (EAST & WEST) 59 (WEST)

PANEL B7A - 13'-4" x 59'-9"

FABRICATION BY LACLEDE STEEL COMPANY

FABRICATED AT MADISON, ILLINOIS		DESIGN DRAWING NO 7-AB3-26	PLATE
APPROVED FOR FABRICATION BY ______ FOR P.O.N.Y.A.	DATE	DRAWN BY [illegible] DATE MAY 8, 1969	
APPROVED FOR FABRICATION BY ______ FOR FABRICATOR	DATE	CHECKED BY T.M. CHURA DATE MAY 8, 1969	IN CHARGE OF PROD. DEV
DETAILED BY A.G. [illegible]		FABRICATION CONT NO W.T.C. 221	SHEET NO FP B7A